TESLA

CZECH REPUBLIC

ZAPALOVACÍ KABELY

IGNITION LEADS

ПРОВОДА ЗАЖИГАНИЯ

IGNITION
technology

2018 - 2020

ZAPALOVACÍ KABELY
IGNITION LEADS
ПРОВОДА ЗАЖИГАНИЯ
ZÜNDLEITUNGEN
CABLES DE ENCENDIDO
CÂBLES D'ALLUMAGE
CAVI D'ACCENSIONE

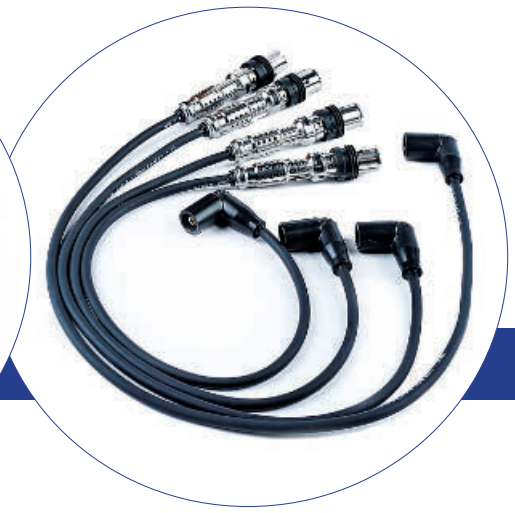

LPG CNG

www.tesla-blatna.cz

TecAlliance
TecDoc Inside

Ignition lead sets
Комплекты проводов зажигания
Sady zapalovacích kabelů
Set dei cavi d'accensione
Zündleitungssätze

TESLA

2 - 11	Marking, technical specification Обозначение, техническое описание Značení, technický popis Identificazione, descrizione tecnica Bezeichnung, technische Beschreibung
13 - 135	Application of ignition lead sets Применение комплектов проводов зажигания Použití sad zapalovacích kabelů
136 - 280	Ignition lead sets - summary with designs Комплекты проводов зажигания - перечень, изображение и перечень Sady zapalovacích kabelů - přehled a vyobrazení
282	Summary HP / kW Переводная таблица л.с. / кВт Přehled HP / kW
283 - 302	Cross references Таблицы сравнения Srovnávací tabulky
304	Packing Упаковка Balení
305	Sales stand Презентационный стенд Prodejní stojan
306 - 312	Комплекты проводов зажигания для всех моделей российских автомобилей
313 - 314	Sales representatives Торговые представители Obchodní zástupci
315	Other products Остальной ассортимент Další sortiment

TESLA BLATNÁ, a.s.

Ignition lead sets – marking, technical specifications

TESLA ignition lead sets are made of different types of cables. Their basic construction and parameters are described below. The sets comply with the ISO 3808, ISO 6856 and SAE J2031 international standards. All TESLA sets meet the EMC requirements according to ECE R10.

TESLA part numbers (e.g. T001B) are used to identify required ignition lead sets (application and construction used). The part numbers are also used as ordering numbers / references.

Part number of an ignition lead set

T	0	0	1	X

X= B, G, H, S – sets with resistive core
X= C – sets with copper core
X= M, P – sets with inductive core

FORD						I
Mondeo III (B5Y) 2.0 16V	11.00 - 08.07	107	1999	CJBA/CJBB		T965G

Resistive core

Ignition cables consist of a core, inner insulation and outer jacket. The conductive silicone core (1) is formed by carbon impregnated glass fibre bundle cord (a), covered with conductive latex coating (b), and by conductive silicone layer (c) of a defined thickness. The special cord ensures high tension strength and stability while the conductive silicone ensures maximum efficiency of both energy transmission and suppression. The inner insulation (2) provides superior heat resistance and dielectric strength while the tape braiding (3) adds strength and flexibility. The outer silicone jacket (4) protects the cable from the working environment under the bonnet. Ignition leads are equipped with various types of terminals on each end. The terminals are covered by silicone rubber boots for insulation and protection against the working environment under the bonnet. Shapes of these components correspond to the OE requirements.

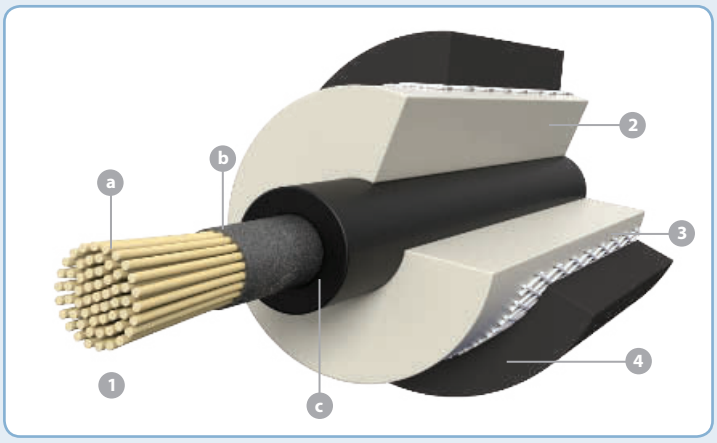

Technical specification - cable parameters - resistive core

type of TESLA set	cable diameter	outer jacket	temperature range	class ISO 3808	cable colour
Txxx**B**	7 mm	silicone	-40 … + 220°C	E	black
Txxx**G**	8 mm	silicone	-40 … + 220°C	E	black
Txxx**H**	7 mm	silicone	-40 … + 220°C	E	blue
Txxx**S**	7 mm	silicone	-50 … + 250°C	F	blue

Ignition lead sets – marking, technical specifications

Copper core

Ignition cables consist of a core, inner insulation and outer jacket. The copper core (1) guarantees a loss-free transmission of energy over the cable and consists of stranded tin plated copper wires. The inner insulation (2) provides superior heat resistance and dielectric strength while the tape braiding (3) adds strength and flexibility. The outer silicone jacket (4) protects the cable from the working environment under the bonnet.
The suppression is carried out by a suppression resistor implemented in the body of suppressed spark plug boot and coil (distributor) boot connectors. The spark plug boot connectors are often shielded by a metal plate for higher heat and mechanical protection. The typical value of the resistor element is 1 or 5 kΩ.

Technical specification - cable parameters - copper core

type of TESLA set	cable diameter	outer jacket	temperature range	class ISO 3808	cable colour
Txxx**C**	7 mm	silicone	-40 … + 220°C	E	black

Inductive core

Ignition cables consist of a core, inner insulation and outer jacket. The inductive core (1) consists of a kevlar cord (a), a ferrite loaded conductive layer (b) and thin stainless steel wire (c) wound over the substrate fixed by sprayed coating (d). The kevlar cord ensures excellent tension strength and stability while the winding with the substrate ensures maximum efficiency of energy transmission with suppression. The inner insulation (2) provides superior heat resistance and dielectric strength while the tape braiding (3) adds strength and flexibility. The outer silicone jacket (4) protects the cable from the working environment under the bonnet. Ignition leads are equipped with various types of terminals on each end. The terminals are covered by silicone rubber boots for insulation and protection against the working environment under the bonnet. Shapes of these components correspond to the OE requirements.

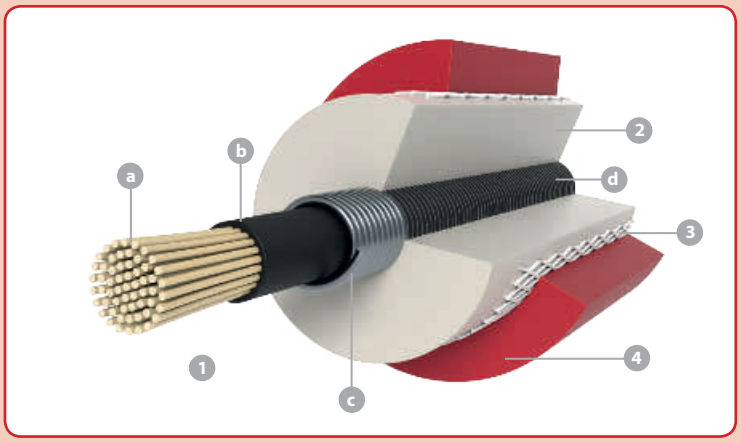

Technical specification - cable parameters - inductive core

type of TESLA set	cable diameter	outer jacket	temperature range	class ISO 3808	cable colour
Txxx**M**	8 mm	silicone	-50 … + 250°C	F	red
Txxx**P**	5 mm	silicone	-40 … + 220°C	E	red

Комплекты проводов зажигания – обозначение , техническое описание

Фирма TESLA BLATNÁ, a.s. использует для изготовления комплектов проводов зажигания различные типы проводов, описанных ниже. Провода отвечают требованиям стандартов ISO 6856, ISO 3808 и SAE J2031. Все комплекты соответствуют требованиям по обязательному подавлению радиопомех согласно международному стандарту ECE R10.

Комплекты проводов зажигания TESLA обозначены кодом T001X, содержащим тип и цвет проводов данного комплекта. Это обозначение служит одновременно как каталожный № для заказа.

Номер комплекта проводов зажигания

T 0 0 1 X

X= B, G, H, S – комплекты с резистивным сердечником
X= C – комплекты с медным сердечником
X= M, P – комплекты с индуктивным сердечником

FORD						I
Mondeo III (B5Y) 2.0 16V	11.00 - 08.07	107	1999		CJBA/CJBB	T965G

Провод с резистивным сердечником

Проводящий силиконовый сердечник провода (1) изготовлен из стекловолокна с углеродной пропиткой (a), покрытого проводящими слоями латекса (b) и силикона определенной толщины (c). Стекловолокна гарантируют повышенную прочность при растяжении , проводящие части обеспечивают максимальную передачу энергии к свече зажигания и совершенную защиту проводов от радиопомех. Внутренняя изоляция (2) вместе с изоляционной оплеткой (3) также выполняют функцию электрической изоляции и улучшают механические свойства провода на изгиб, расяжение и излом. Внешняя силиконовая изоляция (4), защищает сердечник от вредных влияний рабочей среды. Провода зажигания обеспечивают контакт со свечой зажигания и катушкой (распределителем) зажигания при помощи различных типов контактов. Контакты защищены наконечниками и колпачками. Вид и форма контактов и колпачков зависит от выбранной конструкции соединения.

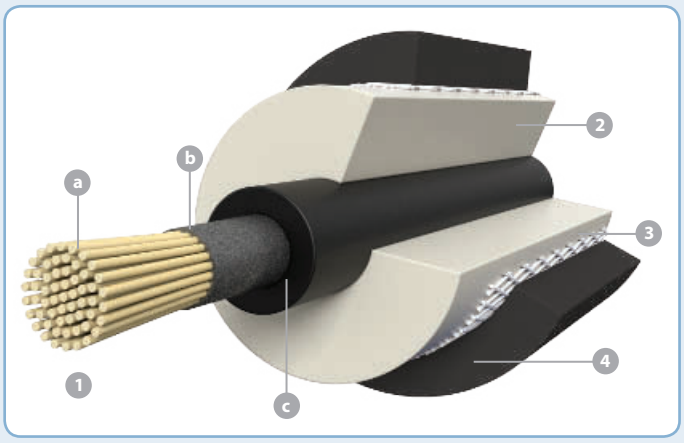

Спецификация комплектов - параметры проводов - резистивный сердечник

код комплекта TESLA	диаметр провода	внешняя оболочка	теплостойкость	класс по ISO 3808	цвет провода
Txxx**B**	7 mm	силикон	-40 … + 220°C	E	чёрный
Txxx**G**	8 mm	силикон	-40 … + 220°C	E	чёрный
Txxx**H**	7 mm	силикон	-40 … + 220°C	E	синий
Txxx**S**	7 mm	силикон	-50 … + 250°C	F	синий

Комплекты проводов зажигания – обозначение , техническое описание

Провод с медным сердечником

Провода зажигания с медным сердечником (1) гарантируют передачу энергии без потерь. Подавление помех обеспечивает сопротивление - резистор, размещенный в свечном наконечнике провода и в наконечнике на распределитель (катушку). Внутренняя изоляция (2) выполняет функцию диэлектрической защиты провода, оплётка (3) улучшает механические свойства провода на растяжение и изгиб. Внешняя силиконовая изоляция (силиконовый плащ) (4) защищает провод от влияния рабочей среды. Резистори для подавления помех в наконечнике свечи зажигания (или в наконечнике на распределитель) имеют 5 или 1 kΩ. Провода зажигания обеспечивают контакт со свечой зажигания и катушкой (распределителем) зажигания при помощи различных типов контактов. Контакты защищены наконечниками. Вид и форма контактов и наконечников зависит от выбранной конструкции соединения.

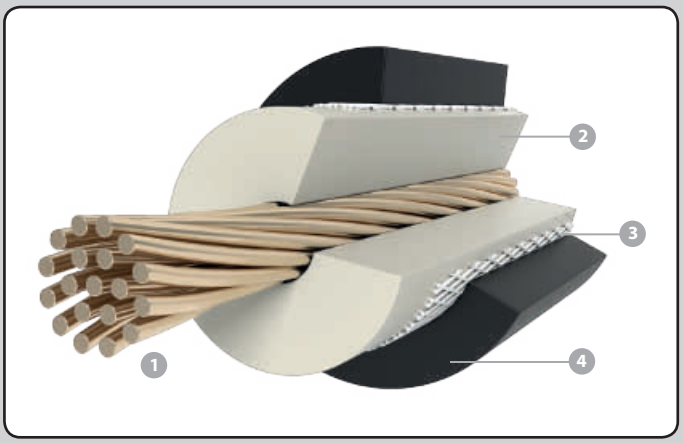

Спецификация комплектов - параметры проводов - медный сердечник

код комплекта TESLA	диаметр провода	внешняя оболочка	теплостойкость	класс по ISO 3808	цвет провода
Txxx**C**	7 mm	силикон	-40 … + 220°C	E	чёрный

Провод с индуктивным сердечником

Конструкция сердечника (1) провода гарантирует максимальный перенос энергии к свече зажигания за счет снижения величины сопротивления и уменьшения потерь напряжения. Проводящим элементом проводов является ферромагнитное ядро, конструкция которого следующая: тонкая проволока из нержавеющей стали (c) с фиксирующим напылением (d) обмотанная вокруг центрального ядра из проводящего ферритосодержащего слоя (b) усиленного кевларовым волокном (a). Внутренняя изоляция (2) с изоляционной оплеткой (3) также выполняет функцию электрической изоляции и улучшает механические свойства провода на изгиб, растяжение и излом. Внешняя силиконовая изоляция (4) защищает сердечник от вредных влияний рабочей среды. Провода зажигания обеспечивают контакт со свечой зажигания и катушкой (распределителем) зажигания при помощи различных типов контактов. Контакты защищены наконечниками и колпачками. Вид и форма контактов и колпачков зависит от выбранной конструкции соединения.

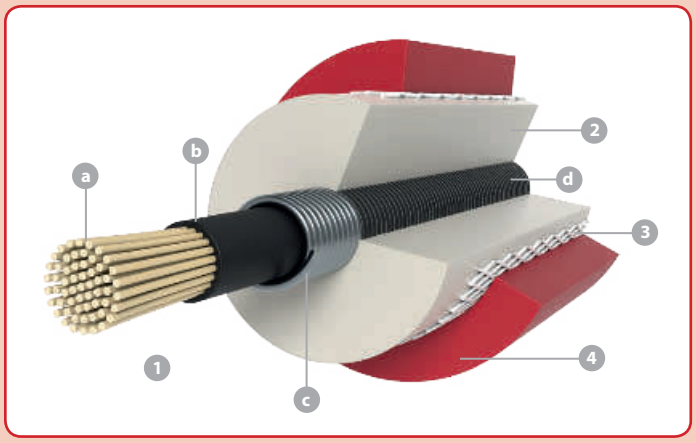

Спецификация комплектов - параметры проводов - индуктивный сердечник

код комплекта TESLA	диаметр провода	внешняя оболочка	теплостойкость	класс по ISO 3808	цвет провода
Txxx**M**	8 mm	силикон	-50 … + 250°C	F	красный
Txxx**P**	5 mm	силикон	-40 … + 220°C	E	красный

Sady zapalovacích kabelů – značení, technický popis

Firma TESLA BLATNÁ, a.s. používá pro výrobu sad zapalovacích kabelů rozdílné typy kabelů, které jsou popsány dále. Sady odpovídají požadavkům norem ISO 6856, ISO 3808 a SAE J2031. Všechny sady z těchto kabelů splňují požadavky na povinné odrušení dle normy ECE R10.

Sady zapalovacích kabelů TESLA jsou popsány typovým označením T001X, které definuje typ kabelů dané sady a zároveň slouží jako číslo pro objednávku.

Objednací číslo sady zapalovacích kabelů

T 0 0 1 X

X= B, G, H, S – sady s odporovým jádrem
X= C – sady s měděným jádrem
X= M, P – sady s induktivním jádrem

FORD						I
Mondeo III (B5Y) 2.0 16V	11.00 - 08.07	107	1999		CJBA/CJBB	**T965G**

Odporové jádro

Vodivé silikonové jádro kabelu (1) je složeno ze svazku uhlíkem nasycených skelných vláken (a), potažených vodivým latexem (b), a z vodivé silikonové vrstvy (c) o definované tloušťce. Vlákna zaručují zvýšenou pevnost v tahu a vodivé složky jádra zaručují maximální přenos energie a dokonalé odrušení kabelů. Vnitřní izolace (2) s opředením (3) plní funkci elektrické izolace a zlepšuje mechanické vlastnosti v ohybu. Vnější silikonový plášť (4) chrání jádro včetně izolace před vlivy pracovního prostředí. Zapalovací kabel je opatřen tvarově různými typy kontaktů pro spojení mezi zapalovací svíčkou a zapalovací cívkou (rozdělovačem) - (cívkou a rozdělovačem). Tyto kontakty jsou chráněny kabelovými převlečkami proti vlivům pracovního prostředí. Tvary a provedení kontaktů a převleček odpovídají konkrétním podmínkám aplikace.

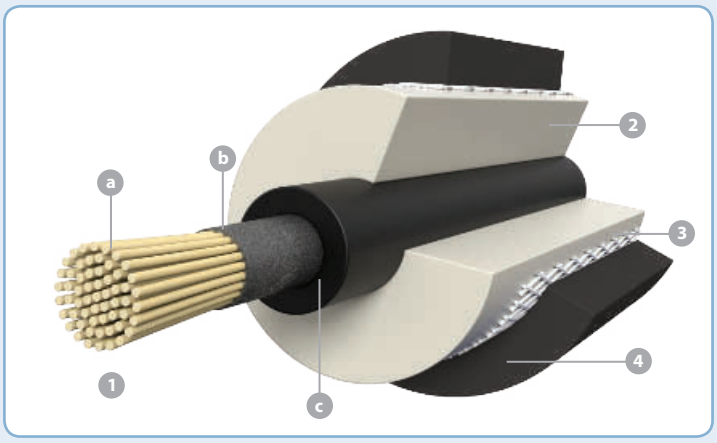

Specifikace sad - parametry kabelu - odporové jádro

označení sady TESLA	průměr kabelu	vnější plášť	teplotní rozsah	třída ISO 3808	barva kabelu
Txxx**B**	7 mm	silikon	-40 … + 220°C	E	černá
Txxx**G**	8 mm	silikon	-40 … + 220°C	E	černá
Txxx**H**	7 mm	silikon	-40 … + 220°C	E	modrá
Txxx**S**	7 mm	silikon	-50 … + 250°C	F	modrá

Sady zapalovacích kabelů – značení, technický popis

Měděné jádro

Měděné jádro (1) zapalovacích kabelů zaručuje bezeztrátový přenos energie. Odrušení kabelů zajišťují odrušovací rezistory umístěné v koncovce zapalovací svíčky a v koncovce rozdělovače (cívky). Vnitřní izolace (2) s opředením (3) plní funkci elektrické izolace a zlepšuje mechanické vlastnosti v ohybu. Silikonový vnější plášť (4) chrání jádro včetně izolace před vlivy pracovního prostředí. Odrušovací rezistory ve stíněných nebo nestíněných koncovkách pro zapalovací svíčky (v koncovkách pro zapalovací cívky, rozdělovač) mají hodnotu 5 nebo 1 kΩ.

Specifikace sad - parametry kabelu - měděné jádro

označení sady TESLA	průměr kabelu	vnější plášť	teplotní rozsah	třída ISO 3808	barva kabelu
Txxx**C**	7 mm	silikon	-40 … + 220°C	E	černá

Induktivní jádro

Jádro kabelu (1) je složeno z kevlarového kordu (a) a z vodivé vrstvy plněné feritem (b), na které je navinut nerezový vodič (c), opatřený fixační vrstvou (d). Kord zaručuje pevnost v tahu a vodivý materiál s nerezovým vinutím plní funkci elektricky vodivého spoje a útlumového prvku pro odrušení. Vnitřní izolace (2) s opředením (3) plní funkci elektrické izolace a zlepšuje mechanické vlastnosti v ohybu. Vnější silikonový plášť (4) chrání jádro včetně izolace před vlivy pracovního prostředí. Zapalovací kabel je opatřen tvarově různými typy kontaktů pro spojení mezi zapalovací svíčkou a zapalovací cívkou (rozdělovačem) - (cívkou a rozdělovačem). Tyto kontakty jsou chráněny kabelovými převlečkami proti vlivům pracovního prostředí. Tvary a provedení kontaktů a převleček odpovídají konkrétním podmínkám aplikace.

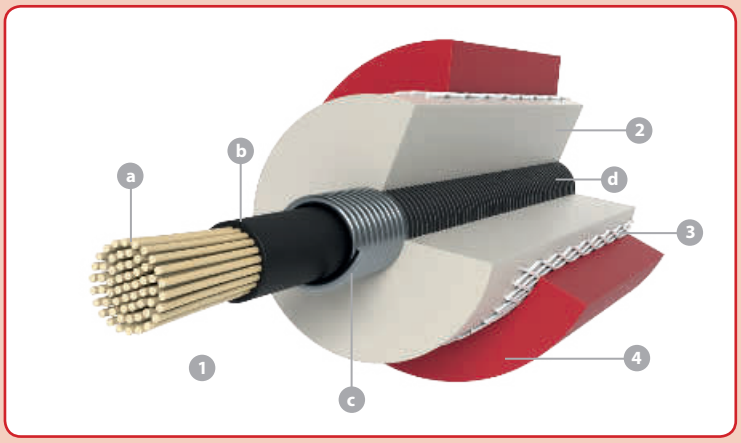

Specifikace sad - parametry kabelu - induktivní jádro

označení sady TESLA	průměr kabelu	vnější plášť	teplotní rozsah	třída ISO 3808	barva kabelu
Txxx**M**	8 mm	silikon	-50 … + 250°C	F	červená
Txxx**P**	5 mm	silikon	-40 … + 220°C	E	červená

Set dei cavi d'accensione – identificazione, descrizione tecnica

La ditta TESLA BLATNÁ, a.s. utilizza per la produzione dei set dei cavi d'accensione diversi tipi dei cavi descritti di cui sotto. I set rispettano i requisiti delle norme ISO 3808, ISO 6856 e SAE J2031. Tutti i set fatti di tali cavi rispettano i requisiti di schermatura obbligatoria secondo il regolamento ECE-R10.

I set dei cavi d'accensione TESLA riportano la sigla T001X che definisce il tipo dei cavi del rispettivo set e nel caso dell'ordine è da riportare.

Numero del set dei cavi d'accensione da riportare nell'ordine

T 0 0 1 X

X= B, G, H, S – set con nucleo resistenza
X= C – set con nucleo in rame
X= M, P – set con nucleo induttivo

FORD						I
Mondeo III (B5Y) 2.0 16V	11.00 - 08.07	107	1999		CJBA/CJBB	**T965G**

Nucleo resistenza

I cavi iniezione consistono in un nucleo, un isolamento interno ed un rivestimento esterno. Il nucleo conduttore del silicone (1) è formato da un cavo in fibra di vetro (a) ricoperto dal rivestimento conduttivo in lattice (b) e da uno strato di silicone conduttivo (c) dallo spessore ben definito. I fili garantiscono la maggiore resistenza alla trazione e le componenti conduttive del nucleo garantiscono la trasmissione massima e la schermatura perfetta dei cavi. L'isolamento interno (2) con rivestimento (3) funge da isolamento elettrico e migliora le caratteristiche meccaniche alla flessione. L'involucro esterno in silicone (4) protegge il nucleo e l'isolamento contro gli impatti dell'ambiente di lavoro. Il cavo d'accensione e munito di contatti di forme diverse per creare l'interconnessione tra la candela d'accensione e il distributore (bobina e distributore). Questi contatti sono coperti dalle apposite guaine che li proteggono contro gli impatti dell'ambiente di lavoro. Le forme e l'esecuzione dei contatti e delle guaine corrispondo alle condizioni concrete dell'applicazione.

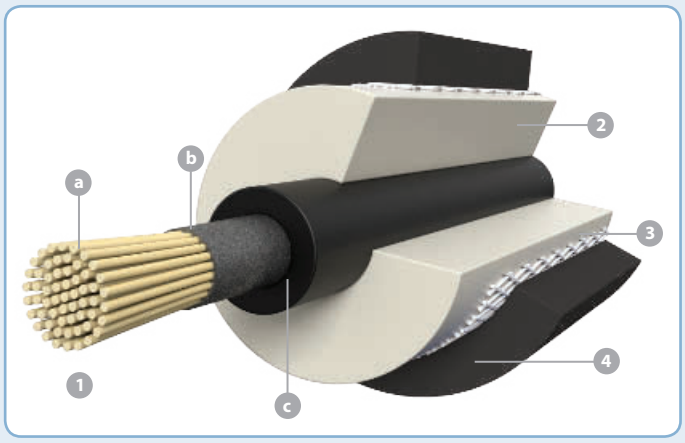

Specifica dei set – parametri cavo – nucleo resistenza:

identificazione set TESLA	diametro cavo	involucro esterno	campo di temperature	classe ISO 3808	colore cavo
Txxx**B**	7 mm	silicone	-40 … + 220°C	E	nero
Txxx**G**	8 mm	silicone	-40 … + 220°C	E	nero
Txxx**H**	7 mm	silicone	-40 … + 220°C	E	blu
Txxx**S**	7 mm	silicone	-50 … + 250°C	F	blu

Set dei cavi d'accensione – identificazione, descrizione tecnica

Nucleo in rame

Il nucleo in rame (1) dei cavi d'accensione garantisce la trasmissione dell'energia senza fili. Gli appositi resistori di schermatura posizionati nel terminale della candela di accensione e nel terminale del distributore (della bobina) provvedono alla schermatura dei cavi. L'isolamento interno (2) con rivestimento (3) funge da isolamento elettrico e migliora le caratteristiche meccaniche alla flessione. L'involucro esterno in silicone (4) protegge il nucleo e l'isolamento contro gli impatti dell'ambiente di lavoro. Il valore dei resistori di schermatura nel terminale della candela di accensione con la schermatura metallica (oppure nel terminale del distributore) è 5 oppure 1 kΩ.

Specifica dei set – parametri cavo – nucleo in rame

identificazione set TESLA	diametro cavo	involucro esterno	campo di temperature	classe ISO 3808	colore cavo
Txxx**C**	7 mm	silicone	-40 … + 220°C	E	nero

Nucleo induttivo

Il nucleo induttivo (1) consiste in un cordone Kevlar (a) ricoperto da uno strato conduttivo caricato in ferrite (b) e da un filo di acciaio inossidabile sottile (c) avvolto da uno strato di rivestimento di fissaggio (d). Il cordino garantisce la resistenza alla trazione e il materiale conducente con l'avvolgimento inossidabile funge da attacco conduttivo e dell'elemento inibitore di schermatura. L'isolamento interno (2) con il tessuto (3) funge da isolamento elettrico e migliora le caratteristiche meccaniche alla flessione. L'involucro esterno in silicone (4) protegge il nucleo e l'isolamento contro gli impatti dell'ambiente di lavoro. Il cavo d'accensione e munito di contatti di forme diverse per creare l'interconnessione tra la candela d'accensione e il distributore (bobina e distributore). Questi contatti sono coperti dalle apposite guaine che li proteggono contro gli impatti dell'ambiente di lavoro. Le forme e l'esecuzione dei contatti e delle guaine corrispondo alle condizioni concrete dell'applicazione.

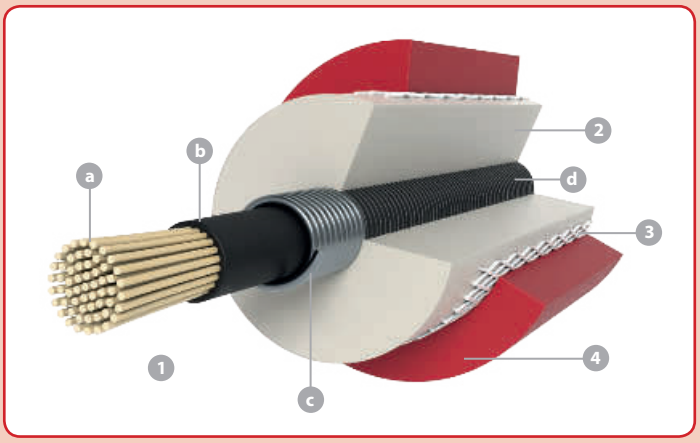

Specifica dei set – parametri cavo – nucleo induttivo

identificazione set TESLA	diametro cavo	involucro esterno	campo di temperature	classe ISO 3808	colore cavo
Txxx**M**	8 mm	silicone	-50 … + 250°C	F	rosso
Txxx**P**	5 mm	silicone	-40 … + 220°C	E	rosso

Zündleitungssätze – Bezeichnung, technische Beschreibung

Die Firma TESLA BLATNÁ, a.s. verwendet für die Fertigung der Zündleitungssätze unterschiedliche Kabeltypen, die anschließend beschrieben werden. Die Sätze entsprechen den Anforderungen der Normen ISO 3808, ISO 6856 und SAE J2031. Alle aus diesen Kabeln zusammengestellten Sätze erfüllen die Anforderungen der Pflichtfunkentstörung gemäß der Norm ECE R10.

Die Zündleitungssätze TESLA sind mit der Typenbezeichnung T001X gekennzeichnet, die den Typ des Kabels der entsprechenden Sätze festlegt und zugleich als Nummer für die Bestellung dient.

Bestellnummer für Zündleitungssätze

T 0 0 1 X

X= B, G, H, S – Sätze mit Widerstandskern
X= C – Sätze mit Kupferkern
X= M, P – Sätze mit induktivem Kern

FORD						I
Mondeo III (B5Y) 2.0 16V	11.00 - 08.07	107	1999		CJBA/CJBB	**T965G**

Widerstandskern

Der leitende Silikonkern (1) besteht aus einem Kohlenstoffimprägnierten Glasfaserbündel (a) mit leitender Latexschicht (b) und leitender Silikonumhüllung (c). Die Fasern gewähren eine erhöhte Zugfestigkeit und die leitenden Teile des Kerns sichern eine maximale Energieübertragung sowie perfekte Funkentstörung der Leitung. Die Innenisolierung (2) mit der Beflechtung (3) erfüllt die Funktion einer elektrischen Isolierung und verbessert die mechanische Kabelfestigkeit. Der Außensilikonmantel (4) schützt den Kern sowie die Isolierung vor den Einflüssen der Arbeitsumgebung. Die Zündkabel sind mit Kontakten, die sich durch die Form unterscheiden, versehen, um eine Verbindung zwischen der Zündkerze, dem Verteiler und der Zündspule zu bilden. Diese Kontakte sind mit Schutzkappen gegen die Einflüsse der Arbeitsumgebung ausgestattet. Die Ausführungen der Kontakte sowie der Schutzkappen entsprechen den konkreten Bedingungen der Anwendung.

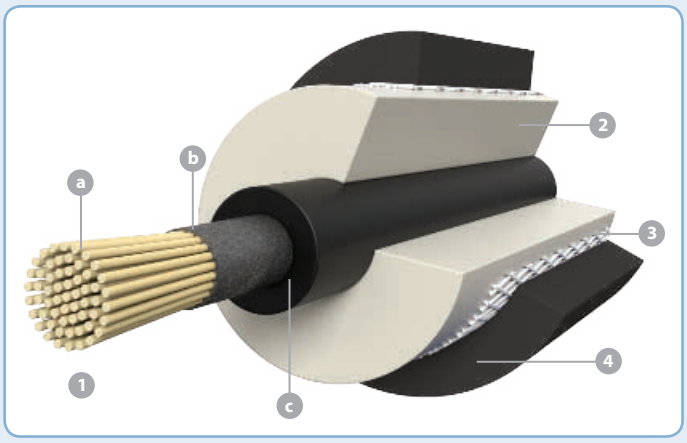

Spezifikation der Sätze - Kabelparameter - Widerstandskern

Bezeichnung der Sätze TESLA	Kabel-durchmesser	Außenmantel	Temperatur-bereich	Klasse ISO 3808	Farbe
Txxx**B**	7 mm	Silikon	-40 … + 220°C	E	schwarz
Txxx**G**	8 mm	Silikon	-40 … + 220°C	E	schwarz
Txxx**H**	7 mm	Silikon	-40 … + 220°C	E	blau
Txxx**S**	7 mm	Silikon	-50 … + 250°C	F	blau

Zündleitungssätze – Bezeichnung, technische Beschreibung

Kupferkern

Der Kupferkern (1) der Zündleitung gewährt eine ideale Energieübertragung. Die Funkentstörung der Leitung sichern die Entstörwiderstände, die sich in dem Zündkerzenstecker und im Verteiler- oder Zündspulenstecker befinden. Die Innenisolierung (2) mit der Beflechtung (3) erfüllt die Funktion einer elektrischen Isolierung und verbessert die mechanische Kabelfestigkeit. Der Außensilikonmantel (4) schützt den Kern sowie die Isolierung vor den Einflüssen der Arbeitsumgebung.
Die Entstörwiderstände im Zündkerzenstecker mit der Metallabschirmung, im Verteiler- und Zündspulenstecker betragen 5 oder 1 kΩ.

Spezifikation der Sätze - Kabelparameter – Kupferkern

Bezeichnung der Sätze TESLA	Kabel-durchmesser	Außenmantel	Temperatur-bereich	Klasse ISO 3808	Farbe
Txxx**C**	7 mm	Silikon	-40 … + 220°C	E	schwarz

Induktiver Kern

Der Kabelkern (1) besteht aus einem Kevlarkord (a), einer Ferritbeladenen leitenden Schicht (b), auf welche Edelstahldraht (c) mit einer Befestigungsschicht (d) aufgewickelt ist. Der Tragkern sichert die Zugfestigkeit, und das leitende Material mit dem Edelstahlleiter erfüllt die Funktion einer stromleitenden Verbindung und eines Dämpfungselements für die Funkentstörung. Die Innenisolierung (2) mit der Beflechtung (3) erfüllt die Funktion einer elektrischen Isolierung und verbessert die mechanische Kabelfestigkeit. Der Außensilikonmantel (4) schützt den Kern sowie die Isolierung vor den Einflüssen der Arbeitsumgebung. Die Zündkabel sind mit Kontakten, die sich durch die Form unterscheiden, versehen, um eine Verbindung zwischen der Zündkerze, dem Verteiler und der Zündspule zu bilden. Diese Kontakte sind mit Schutzkappen gegen die Einflüsse der Arbeitsumgebung ausgestattet. Die Ausführungen der Kontakte sowie der Schutzkappen entsprechen den konkreten Bedingungen der Anwendung.

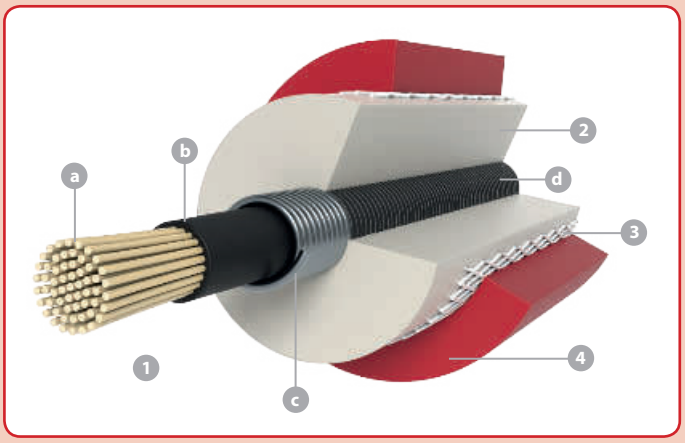

Spezifikation der Sätze - Kabelparameter – induktiver Kern

Bezeichnung der Sätze TESLA	Kabel-durchmesser	Außenmantel	Temperatur-bereich	Klasse ISO 3808	Farbe
Txxx**M**	8 mm	Silikon	-50 … + 250°C	F	rot
Txxx**P**	5 mm	Silikon	-40 … + 220°C	E	rot

	page/страница/strana
ALFA ROMEO	15
ARO	17
AUDI	17
AZLK	22
BMW	22
BYD	24
CHERY	24
CHEVROLET	25
CHRYSLER	26
CITROEN	27
DACIA	31
DAEWOO	31
DAIHATSU	33
DATSUN	34
FIAT	34
FORD	39
FSO	49
GAZ	49
GEELY	49
GREAT WALL	49
HONDA	50
HYUNDAI	52
INFINITI	55
IZH	55
JEEP	56
KIA	56
LADA (VAZ)	58
LANCIA	60
LANDROVER	62
LEXUS	62
LIFAN	63

	page/страница/strana
LuAZ	63
MAZDA	63
MERCEDES	67
MG	74
MINI	75
MITSUBISHI	75
NISSAN	79
OPEL (VAUXHALL)	83
PEUGEOT	92
PORSCHE	96
PROTON	96
RENAULT	96
ROVER	103
SAAB	105
SEAT	106
SKODA	109
SMART	110
SSANG YONG	111
SUBARU	111
SUZUKI	114
TAGAZ (VORTEX)	116
TATRA	116
TOYOTA	116
TRABANT	120
UAZ	120
VOLVO	121
VW	126
WARTBURG	134
ZASTAVA	134
ZAZ	134

Symbols and abbreviations used / Использованные символы и сокращения / Použité symboly a zkratky

FORD

model	year	kW	cm³	cyl	engine	I	II	III	info
Mondeo III (B5Y)									
2.0 16V	11.00 - 08.07	107	1999	4	CJBA/CJBB	**T965G**			
car make and model (body design) марка и модель автомобиля (тип кузова) značka a model automobilu (typ karoserie)	year of production год производства rok výroby	engine, power capacity мощность и объём двигателя výkon a objem motoru		number of cylinders к-во цилиндров počet válců	type of engine тип двигателя typ motoru	catalogue number of ignition lead set номер комплекта проводов зажигания objednací číslo sady zapalovacích kabelů			

Cat - catalysator
Carb - carburettor
Kompr - Kompressor
S.W. - Station Wagon
T.S. - Twin spark
SPI - single point injection / моновпрыск / jednobodový vstřik
MPI - multi point injection / распределеный впрыск / vícebodový vstřik

info	
Mot. No. 11111	(a)
semidirect	(b)

a) **additional information / дополнительная информация / doplňková informace:**
- engine No. (Mot. No.), chassis No. (ch. No.), engine code
- двигатель № (Mot. No.), шасси № (ch. No.), марка двигателя
- číslo motoru (Mot. No.), č. podvozku (ch. No.), kód motoru
- without start/stop system
- без системы старт/стоп
- systém start/stop není použit

b) **set description / описание комплектов / popis sad:**

semidirect
- combined ignition system: ignition leads / ignition coils
- комбинированная система зажигания: провода зажигания / прямые катушки зажигания
- kombinovaný zapalovací systém: zapalovací kabely / zapalovací cívky

original / alternative, orig. / alter., orig. / alter. / suppl.
- set with copper core /C/, which could be replaced by set with resistive core /B/
- комплект с медным сердечником /C/ можно заменить комплектом с резистивным сердечником /B/
- sada s měděným jádrem /C/ může být nahrazena sadou s odporovým jádrem /B/

suppl
- supplement to sets „original" and „alternative"
- альтернативный комплект
- funkční náhrada sad „original" a „alternative"

premium / basic / inductive
- various sets for russian cars
- различные типы комплектов для российских автомобилей
- různé typy sad pro ruské značky

boot design, angled boot
- sets with various boot design
- комплекты с разными типами наконечников
- sady s různým provedením koncovek

cable length, coil cable 60 cm
- different length of leads
- различная длина проводов
- různé délky kabelů

coil cable DIN-SAE
- type of cable connection ignition coil-distributor
- способ присоединения провода к катушке зажигания / распределителя зажигания
- způsob připojení kabelu cívka-rozdělovač

with distributor
- set with cable distributor/coil
- в комплект входит провод для соединения катушки с распределителем зажигания
- sada s kabelem rozdělovač/cívka

without distributor
- set without cable distributor/coil
- комплект не содержит провода для соединения катушки с распределителем зажигания
- sada bez kabelu rozdělovač/cívka

system Lucas, Bosch
- ignition system
- тип системы зажигания
- systém zapalování

5mm cable, 7 mm cable
- diameter of cable
- диаметр провода
- průměr kabelu

DIN, DIN FORD, PIN, SAE
- type of connection - distributor/coil
- способ присоединения провода к распределителю/катушке зажигания
- způsob připojení k rozdělovači/cívce

model	year	kW	cm³	cyl	engine	I	II	III	info
ALFA ROMEO									
33 (905)									
1.2 (905.A)	06.83 - 12.89	50	1186	4	AR 30585	**T878B**			
1.3	06.83 - 12.89	55	1351	4	AR 30586/AR 30502	**T878B**			
1.3	05.83 - 12.89	58	1351	4	AR 30502	**T878B**			
1.3	10.84 - 12.89	63	1351	4	AR 30168/AR 30587	**T878B**			
1.3 i.e.	05.83 - 12.89	66	1351	4	AR 30168	**T878B**			
1.5	06.83 - 12.86	66	1490	4	AR 30520	**T878B**			
1.5	05.83 - 12.93	70	1490	4	AR 30182	**T597B**			
1.5	07.86 - 12.89	75	1490	4	AR 30588	**T878B**			
1.5 4x4	01.85 - 09.86	66	1490	4	AR 30520	**T878B**			
1.5 4x4	07.86 - 12.89	75	1490	4	AR 30588	**T878B**			
1.5 4x4	09.86 - 12.89	77	1490	4	AR 30588/AR 30146	**T878B**			
1.7 i.e.	09.88 - 12.89	77	1712	4	AR 30558	**T877C**	**T015B**		original / alternative
33 (907A)									
1.4 i.e.	06.91 - 09.94	65	1351	4	AR 30753	**T596B**			
	06.91 - 09.94	65	1351	4	AR 30755	**T877C**	**T015B**		original / alternative
1.4 i.e.	06.91 - 09.94	66	1351	4	AR 30753	**T596B**			
	06.91 - 09.94	66	1351	4	AR 30755	**T877C**	**T015B**		original / alternative
1.5	01.90 - 04.93	77	1490	4	AR 30734	**T877C**	**T015B**		original / alternative
1.5 i.e	01.90 - 09.94	71	1490	4	AR 30751	**T877C**	**T015B**		original / alternative
1.5 i.e.	07.90 - 08.91	74	1490	4	AR 30750	**T878B**			
1.7 16V	01.90 - 09.94	95	1712	4	AR 30747	**T206C**	**T046B**		original / alternative
1.7 16V	01.90 - 03.92	97	1712	4	AR 30747	**T206C**	**T046B**		original / alternative
1.7 16V 4x4	01.90 - 09.94	95	1712	4	AR 30747	**T206C**	**T046B**		original / alternative
1.7 16V 4x4	01.90 - 09.94	97	1712	4	AR 30747	**T206C**	**T046B**		original / alternative
1.7 i.e.	01.90 - 03.92	79	1712	4	AR 30737	**T877C**	**T015B**		original / alternative
1.7 i.e.	04.92 - 09.94	77	1712	4	AR 30737 A	**T877C**	**T015B**		original / alternative
1.7 i.e. 4x4	01.90 - 03.92	79	1712	4	AR 30737	**T877C**	**T015B**		original / alternative
33 Sportwagon (905A)									
1.4	01.84 - 12.88	66	1351	4	AR 30587	**T596B**			
1.5	09.84 - 12.86	66	1490	4	AR 30520	**T878B**			
1.5	09.84 - 12.87	70	1490	4	AR 30514	**T597B**			
1.5 4x4	12.86 - 12.89	75	1490	4	AR 30588	**T878B**			
1.5 4x4	09.84 - 12.87	70	1490	4	AR 30182	**T597B**			
1.5 4x4	09.84 - 12.86	66	1490	4	AR 30520	**T878B**			
1.7 i.e.	09.88 - 12.89	77	1712	4	AR 30558	**T877C**	**T015B**		original / alternative
1.7 i.e. 4x4	09.88 - 12.89	77	1712	4	AR 30558/AR 30737	**T877C**	**T015B**		original / alternative
33 Sportwagon (907B)									
1.4 i.e.	06.91 - 09.94	65	1351	4	AR 30755/AR 30753	**T877C**	**T015B**		original / alternative
1.4 i.e.	06.91 - 09.94	66	1351	4	AR 30755	**T877C**	**T015B**		original / alternative
1.4 i.e. 4x4	06.91 - 09.94	66	1351	4	AR 30587/AR 30755	**T596B**			
1.5 i.e	01.90 - 09.94	71	1490	4	AR 30751	**T877C**	**T015B**		original / alternative
1.7 16V	01.90 - 09.94	95	1712	4	AR 30747	**T206C**	**T046B**		original / alternative
1.7 16V	01.90 - 09.94	97	1712	4	AR 30747	**T206C**	**T046B**		original / alternative
1.7 16V 4x4	01.90 - 09.94	95	1712	4	AR 30747	**T206C**	**T046B**		original / alternative
1.7 16V 4x4	01.90 - 03.92	97	1712	4	AR 30747	**T206C**	**T046B**		original / alternative
1.7 i.e.	01.90 - 03.92	79	1712	4	AR 30737	**T877C**	**T015B**		original / alternative
1.7 i.e.	04.92 - 09.94	77	1712	4	AR 30737	**T877C**	**T015B**		original / alternative
1.7 i.e. 4x4	01.90 - 03.92	79	1712	4	AR 30737	**T877C**	**T015B**		original / alternative
75 (162B)									
1.6	05.85 - 09.89	81	1567	4	AR 06100	**T425B**			
1.6 cat	05.89 - 02.92	81	1567	4	AR 61101	**T425B**			
1.8	09.85 - 06.89	85	1779	4	AR 06202	**T425B**			
1.8	09.88 - 02.92	88	1779	4	AR 06168/AR 61102	**T425B**			
1.8	08.89 - 02.92	90	1779	4	AR 61201	**T425B**			
1.8 Turbo	09.86 - 02.92	110	1779	4	AR 06134	**T425B**			
1.8 Turbo i.e.	02.86 - 01.90	114	1779	4	AR 06158	**T425B**			
2.0	05.85 - 10.88	94	1962	4	AR 06212	**T425B**			
90 (162)									
1.8	10.84 - 07.87	85	1779	4	AR 06202	**T425B**			
1.8	10.84 - 07.87	89	1779	4	AR 06202	**T425B**			
2.0 i.e.	10.84 - 07.87	94	1962	4	AR 01713/AR 06212	**T425B**			
145 (930)									
1.4 i.e.	07.94 - 12.96	66	1351	4	AR 33501	**T597B**			
1.4 i.e. 16V T.S.	12.96 - 01.01	76	1370	4	AR 33503	**T599C**			semidirect
1.6 i.e.	10.94 - 12.96	76	1596	4	AR 33201	**T876C**	**T014B**		Mot. No.-0005650, -A0066505
	10.94 - 12.96	76	1596	4	AR 33201	**T879B**			Mot. No. 0005651-, A0066507-
1.6 i.e. 16V T.S.	12.96 - 01.01	88	1598	4	AR 67601	**T599C**			semidirect
1.7 i.e. 16V	10.94 - 12.96	95	1712	4	AR 33401	**T812C**	**T025B**		original / alternative
1.8 i.e. 16V	03.98 - 01.01	106	1747	4	AR 32201	**T599C**			semidirect

ALFA ROMEO 145 (930) ▶

model	year	kW	cm³	cyl	engine	I	II	III	info
145 (930)									
1.8 i.e. 16V T.S.	12.96 - 12.98	103	1747	4	AR 67106	**T599C**			semidirect
2.0 16V Quadrifoglio	03.98 - 01.01	114	1970	4	AR 32301	**T599C**			semidirect
2.0 16V T.S.	10.95 - 01.01	110	1970	4	AR 67204	**T599C**			semidirect
146 (930)									
1.4 i.e.	12.94 - 12.96	66	1351	4	AR 33501	**T597B**			
1.4 i.e. 16V T.S.	11.96 - 01.01	76	1370	4	AR 33503	**T599C**			semidirect
1.6 i.e.	12.94 - 12.96	76	1596	4	AR 33201	**T876C**	**T014B**		Mot. No.-0005650, -A0066505
	12.94 - 12.96	76	1596	4	AR 33201	**T879B**			Mot. No. 0005651-, A0066507-
1.6 i.e. 16V T.S.	11.96 - 01.01	88	1598	4	AR 67601	**T599C**			semidirect
1.7 i.e. 16V	12.94 - 12.96	95	1712	4	AR 33401	**T812C**	**T025B**		original / alternative
1.8 i.e. 16V T.S.	11.96 - 01.01	103	1747	4	AR 67106	**T599C**			semidirect
1.8 i.e. 16V T.S.	03.98 - 01.01	106	1747	4	AR 32201	**T599C**			semidirect
2.0 16V Quadrifoglio	03.98 - 01.01	114	1970	4	AR 32301	**T599C**			semidirect
2.0 16V T.S.	10.95 - 01.01	110	1970	4	AR 67204	**T599C**			semidirect
147 (937)									
1.6 16V T.S.	01.01 - 03.10	88	1598	4	AR 32104	**T100C**			semidirect
1.6 16V T.S. ECO	01.01 - 03.10	77	1598	4	AR 37203	**T100C**			semidirect
2.0 16V T.S.	01.01 - 03.10	110	1970	4	AR 32310	**T100C**			semidirect
155 (167)									
1.6 16V T.S.	05.96 - 12.97	88	1598	4	AR 67601	**T599C**			semidirect
1.7 T.S.	04.93 - 04.96	83	1748	4	AR 67103	**T824C**	**T026B**		original / alternative
1.7 T.S.	04.93 - 04.96	85	1748	4	AR 67105	**T824C**	**T026B**		original / alternative
1.7 T.S. 16V	05.96 - 12.97	103	1747	4	AR 67106	**T389C**	**T021B**		original / alternative
	05.96 - 12.97	103	1747	4	AR 67106	**T599C**			semidirect
1.8 T.S.	02.92 - 12.97	77	1756	4	AR 67402	**T824C**	**T026B**		original / alternative
1.8 T.S.	02.92 - 06.93	95	1773	4	AR 67101	**T824C**	**T026B**		original / alternative
1.8 T.S. Sport	01.92 - 12.96	93	1773	4	AR 67101/AR 67102	**T824C**	**T026B**		original / alternative
2.0 16V Turbo Q4	01.92 - 12.97	140	1995	4	AR 67203	**T205B**			
2.0 16V Turbo Q4	01.92 - 12.97	137	1995	4	AR 67203	**T205B**			
2.0 T.S.	02.92 - 04.93	106	1995	4	AR 67201	**T824C**	**T026B**		original / alternative
2.0 T.S.	02.92 - 02.95	104	1995	4	AR 67202	**T824C**	**T026B**		original / alternative
2.0 T.S. 16V	03.95 - 12.97	110	1970	4	AR 67204	**T599C**			semidirect
2.5 V6	02.92 - 09.96	121	2492	6	AR 67301	**T595C**			
2.5 V6	10.92 - 12.97	120	2492	6	AR 67302/AR 67303	**T595C**			
156 (932)									
1.6 16V T.S.	09.97 - 09.05	88	1598	4	AR 32103/AR 32104	**T100C**			semidirect
	09.97 - 09.05	88	1598	4	AR 32102/AR 67601	**T599C**			semidirect
1.8 16V T.S.	09.97 - 10.00	106	1747	4	AR 32201	**T599C**			semidirect
1.8 16V T.S.	10.00 - 09.05	103	1747	4	AR 32205	**T100C**			semidirect
2.0 16V T.S.	09.97 - 10.00	114	1970	4	AR 32301	**T599C**			semidirect
2.0 16V T.S.	10.00 - 03.02	110	1970	4	AR 32310	**T100C**			semidirect
156 Sportwagon (932)									
1.6 16V T.S.	05.00 - 05.06	88	1598	4	AR 32103/AR 32104	**T100C**			semidirect
1.8 16V T.S.	05.00 - 10.00	106	1747	4	AR 32201	**T599C**			semidirect
1.8 16V T.S.	10.00 - 05.06	103	1747	4	AR 32205	**T100C**			semidirect
2.0 16V T.S.	05.00 - 10.00	114	1970	4	AR 32301	**T599C**			semidirect
2.0 16V T.S.	10.00 - 03.02	110	1970	4	AR 32310	**T100C**			semidirect
164 (164)									
2.0 T.S.	09.92 - 09.98	106	1995	4	AR 64103	**T389C**	**T021B**		original / alternative
2.0 V6 Turbo	03.91 - 09.92	150	1997	6	AR 64101	**T958C**			
2.0 V6 Turbo	09.92 - 09.98	148	1996	6	AR 64102	**T958C**			
3.0 V6	09.92 - 09.98	132	2959	6	AR 66303/AR 64305	**T353C**			
3.0 V6	06.87 - 09.92	135	2959	6	AR 06412	**T353C**			
3.0 V6 (164.A)	06.87 - 09.92	141	2959	6	AR 06410	**T353C**			
3.0 i.e. QV (164.AG)	09.90 - 09.92	147	2959	6	AR 64301/AR 06430	**T353C**			
166 (936)									
2.0 T.S.	09.98 - 10.00	114	1970	4	AR 34103	**T599C**			semidirect
2.0 T.S.	10.00 - 06.07	110	1970	4	AR 36301	**T100C**			semidirect
Giulietta (116)									
1.3	10.77 - 06.83	66	1357	4	AR 01644	**T204B**			
1.6	10.77 - 04.85	79	1570	4	AR 01600	**T204B**			
1.8	04.79 - 04.85	90	1779	4	AR 01678	**T204B**			
2.0	06.80 - 04.85	96	1962	4	AR 11671/AR 01655	**T204B**			
GT (937)									
1.8 TS	11.03 - 09.10	103	1747	4	AR 32205	**T100C**			semidirect
GTV (116)									
2.0	07.78 - 01.86	96	1962	4	AR 06212/AR 01655	**T425B**			
2.0	01.85 - 12.85	94	1962	4	AR 06212	**T425B**			
GTV (916C_)									
1.8 16V	05.98 - 10.05	106	1747	4	AR 32201	**T599C**			semidirect

ALFA ROMEO GTV (916C_) ▶

model	year	kW	cm³	cyl	engine	I	II	III	info
GTV (916C_)									
2.0 T.S. 16V	06.95 - 10.05	110	1970	4	AR 32310	**T100C**			semidirect
	06.95 - 10.05	110	1970	4	AR 16201	**T599C**			semidirect
2.0 T.S. 16V	05.98 - 08.00	114	1970	4	AR 32301	**T599C**			semidirect
2.0 V6 Turbo	06.95 - 09.98	148	1996	6	AR 16202	**T210C**			
Mito (955)									
1.4	05.11 -	51	1368	4	955 A9.000	**T631B**			
1.4	03.11 -	57	1368	4	350 A1.000	**T631B**			
Spider (115)									
1600	03.76 - 12.90	76	1570	4	AR 00526	**T427B**			
1600	03.71 - 12.79	80	1570	4	AR 00536	**T427B**			
2000	08.86 - 12.90	85	1962	4	AR 01544	**T427B**			
2000	08.86 - 12.90	92	1962	4	AR 00515	**T427B**			
2000 Veloce	01.77 - 12.93	93	1962	4	AR 00515/AR 01590	**T427B**			
Spider (916S_)									
1.8 16V (916S3)	05.98 - 04.05	106	1747	4	AR 32201	**T599C**			semidirect
2.0 T.S. 16V	06.95 - 04.05	110	1970	4	AR 32310	**T100C**			semidirect
	06.95 - 04.05	110	1970	4	AR 16201	**T599C**			semidirect
2.0 T.S. 16V	05.98 - 08.00	114	1970	4	AR 32301	**T599C**			semidirect
2.0 V6 Turbo	05.98 - 04.05	148	1996	6	AR 16202	**T210C**			
3.0 V6	06.95 - 04.05	141	2959	6	AR 16101	**T211C**			
3.0 V6 24V	01.99 - 10.00	162	2959	6	AR 16102	**T211C**			
ARO									
240-244									
2.5	01.80 - 12.98	60	2495	4	Aro L25	**T187B**			
AUDI									
80 (81, 85, B2)									
1.3	09.78 - 07.86	44	1297	4	EP	**T701C**	**T038B**	**T207B**	orig. / alter. / suppl.
1.6	02.86 - 07.86	54	1595	4	SA	**T701C**	**T038B**	**T207B**	orig. / alter. / suppl.
1.6	08.78 - 07.86	55	1595	4	DT	**T701C**	**T038B**	**T207B**	orig. / alter. / suppl.
1.8	01.83 - 08.86	66	1781	4	DS/JV	**T701C**	**T038B**	**T207B**	orig. / alter. / suppl.
1.8	08.83 - 08.86	68	1781	4	JN	**T701C**	**T038B**	**T207B**	orig. / alter. / suppl.
1.8 CC quattro	08.84 - 08.86	66	1781	4	NE/JV	**T701C**	**T038B**	**T207B**	orig. / alter. / suppl.
1.8 CC quattro	08.85 - 08.86	68	1781	4	JN	**T701C**	**T038B**	**T207B**	orig. / alter. / suppl.
1.8 GTE	10.84 - 08.86	82	1781	4	DZ	**T701C**	**T038B**	**T207B**	orig. / alter. / suppl.
1.8 GTE	08.85 - 07.86	81	1781	4	PV	**T701C**	**T038B**	**T207B**	orig. / alter. / suppl.
1.8 GTE quattro	08.84 - 08.86	82	1781	4	DZ	**T701C**	**T038B**	**T207B**	orig. / alter. / suppl.
1.8 GTE quattro	03.85 - 08.86	81	1781	4	PV	**T701C**	**T038B**	**T207B**	orig. / alter. / suppl.
1.9 CD-5S	09.81 - 07.83	85	1921	5	WN	**T208B**			
2.0	10.83 - 09.84	85	1994	5	HP	**T208B**			
2.0 quattro	10.83 - 09.84	85	1994	5	JS	**T208B**			
2.2	10.80 - 07.83	85	2144	5	WE	**T208B**			
2.2 quattro	08.82 - 07.84	96	2144	5	KL	**T208B**			
2.2 quattro	08.82 - 07.84	100	2144	5	KK	**T208B**			
80 (89, 89Q, 8A, B3)									
1.4	08.86 - 07.88	48	1400	4	SE	**T701C**	**T038B**	**T207B**	orig. / alter. / suppl.
1.6	08.87 - 09.91	51	1595	4	PP	**T701C**	**T038B**	**T207B**	orig. / alter. / suppl.
1.6	09.86 - 08.91	55	1595	4	RN	**T701C**	**T038B**	**T207B**	orig. / alter. / suppl.
1.6	08.90 - 10.91	75	1595	4	ABB	**T701C**	**T038B**	**T207B**	orig. / alter. / suppl.
1.8	10.86 - 01.90	55	1781	4	RU	**T701C**	**T038B**	**T207B**	orig. / alter. / suppl.
1.8	09.86 - 07.88	83	1847	4	SD	**T701C**	**T038B**	**T207B**	orig. / alter. / suppl.
1.8 quattro	09.86 - 08.90	83	1847	4	SD	**T701C**	**T038B**	**T207B**	orig. / alter. / suppl.
1.8 E	06.86 - 08.91	82	1781	4	DZ	**T701C**	**T038B**	**T207B**	orig. / alter. / suppl.
1.8 E quattro	09.86 - 08.91	82	1781	4	DZ	**T701C**	**T038B**	**T207B**	orig. / alter. / suppl.
1.8 S	09.86 - 12.90	65	1781	4	SF	**T701C**	**T038B**	**T207B**	orig. / alter. / suppl.
1.8 S	09.86 - 10.91	66	1781	4	PM	**T701C**	**T038B**	**T207B**	orig. / alter. / suppl.
1.8 S quattro	09.86 - 07.90	65	1781	4	SF	**T701C**	**T038B**	**T207B**	orig. / alter. / suppl.
1.8 S quattro	09.86 - 09.91	66	1781	4	PM	**T701C**	**T038B**	**T207B**	orig. / alter. / suppl.
2.0	10.90 - 08.91	82	1984	4	AAD	**T701C**	**T038B**	**T207B**	orig. / alter. / suppl.
2.0 E	08.88 - 10.90	83	1984	4	3A	**T701C**	**T038B**	**T207B**	orig. / alter. / suppl.
2.0 E 16V quattro	03.90 - 08.91	101	1984	4	6A	**T591C**	**T945B**		original / alternative
2.0 E quattro	08.88 - 09.90	83	1984	4	3A	**T701C**	**T038B**	**T207B**	orig. / alter. / suppl.
2.0 quattro	10.90 - 08.91	82	1984	4	3A	**T701C**	**T038B**	**T207B**	orig. / alter. / suppl.
2.0 quattro	10.90 - 08.91	85	1984	4	AAD	**T701C**	**T038B**	**T207B**	orig. / alter. / suppl.
80 (8C, B4)									
1.6	09.91 - 12.94	52	1595	4	ABM	**T701C**	**T038B**	**T207B**	orig. / alter. / suppl.
1.6 E	06.93 - 12.94	74	1595	4	ADA	**T593C**	**T034B**		original / alternative
2.0	09.91 - 12.94	66	1984	4	ABT	**T701C**	**T038B**	**T207B**	orig. / alter. / suppl.
2.0 E	09.91 - 12.94	85	1984	4	ABK	**T701C**	**T038B**	**T207B**	orig. / alter. / suppl.

AUDI 80 (8C, B4) ▶

model	year	kW	cm³	cyl	engine	I	II	III	info
80 (8C, B4)									
2.0 E 16V	08.92 - 12.94	103	1984	4	ACE	**T590C**	**T944B**		original / alternative
2.0 E 16V quattro	04.92 - 12.94	103	1984	4	ACE	**T590C**	**T944B**		original / alternative
2.0 E quattro	09.91 - 12.94	85	1984	4	ABK	**T701C**	**T038B**	**T207B**	orig. / alter. / suppl.
2.3 E	09.91 - 12.94	98	2309	5	NG	**T700C**	**T050B**	**T429B**	orig. / alter. / suppl.
2.3 E quattro	09.91 - 12.94	98	2309	5	NG	**T700C**	**T050B**	**T429B**	orig. / alter. / suppl.
2.6	07.92 - 12.94	110	2598	6	ABC	**T869C**	**T073B**		original / alternative
2.6 quattro	06.92 - 12.94	110	2598	6	ABC	**T869C**	**T073B**		original / alternative
2.8	09.91 - 12.94	128	2771	6	AAH	**T869C**	**T073B**		original / alternative
2.8 quattro	09.91 - 12.94	128	2771	6	AAH	**T869C**	**T073B**		original / alternative
80 Avant (8C, B4)									
1.6 E	06.93 - 01.96	74	1595	4	ADA	**T593C**	**T034B**		original / alternative
2.0	07.92 - 01.96	66	1984	4	ABT	**T701C**	**T038B**	**T207B**	orig. / alter. / suppl.
2.0 E	07.92 - 01.96	85	1984	4	ABK	**T701C**	**T038B**	**T207B**	orig. / alter. / suppl.
2.0 E 16V	02.93 - 01.96	103	1984	4	ACE	**T590C**	**T944B**		original / alternative
2.0 E 16V quattro	12.92 - 07.95	103	1984	4	ACE	**T590C**	**T944B**		original / alternative
2.3 E	07.92 - 01.96	98	2309	5	NG	**T700C**	**T050B**	**T429B**	orig. / alter. / suppl.
2.3 E quattro	09.91 - 11.94	98	2309	5	NG	**T700C**	**T050B**	**T429B**	orig. / alter. / suppl.
2.6	07.92 - 01.96	110	2598	6	ABC	**T869C**	**T073B**		original / alternative
2.6 quattro	07.92 - 07.95	110	2598	6	ABC	**T869C**	**T073B**		original / alternative
2.8	09.91 - 01.96	128	2771	6	AAH	**T869C**	**T073B**		original / alternative
2.8 quattro	08.92 - 07.95	128	2771	6	AAH	**T869C**	**T073B**		original / alternative
90 (81, 85, B2)									
2.0	10.84 - 03.87	85	1994	5	JS/HP	**T700C**	**T050B**	**T429B**	orig. / alter. / suppl.
2.0	03.86 - 03.87	83	1994	5	SK	**T700C**	**T050B**	**T429B**	orig. / alter. / suppl.
2.2	01.85 - 03.87	85	2226	5	KX	**T700C**	**T050B**	**T429B**	orig. / alter. / suppl.
2.2	10.84 - 03.87	100	2226	5	KV	**T700C**	**T050B**	**T429B**	orig. / alter. / suppl.
2.2 E quattro	08.85 - 03.87	88	2226	5	JT	**T700C**	**T050B**	**T429B**	orig. / alter. / suppl.
2.2 E quattro	11.84 - 03.87	100	2226	5	KV	**T700C**	**T050B**	**T429B**	orig. / alter. / suppl.
90 (89, 89Q, 8A, B3)									
2.0	07.88 - 09.91	85	1994	5	PS	**T700C**	**T050B**	**T429B**	orig. / alter. / suppl.
2.0 20 V	08.89 - 07.91	118	1994	5	NM	**T941C**	**T020B**		original / alternative
2.0 20 V quattro	08.88 - 09.91	118	1994	5	NM	**T941C**	**T020B**		original / alternative
2.2 E	04.87 - 07.91	100	2226	5	KV	**T700C**	**T050B**	**T429B**	orig. / alter. / suppl.
2.2 E quattro	04.87 - 09.91	100	2226	5	KV	**T700C**	**T050B**	**T429B**	orig. / alter. / suppl.
2.3 E	04.87 - 07.91	100	2309	5	NG	**T700C**	**T050B**	**T429B**	orig. / alter. / suppl.
2.3 E	04.87 - 09.91	98	2309	5	NG	**T700C**	**T050B**	**T429B**	orig. / alter. / suppl.
2.3 E quattro	04.87 - 07.91	100	2309	5	NG	**T700C**	**T050B**	**T429B**	orig. / alter. / suppl.
2.3 E quattro	04.87 - 09.91	98	2309	5	NG	**T700C**	**T050B**	**T429B**	orig. / alter. / suppl.
2.3 E 20V	04.90 - 07.91	123	2309	5	7A	**T941C**	**T020B**		original / alternative
2.3 E 20V	08.88 - 07.91	125	2309	5	7A	**T941C**	**T020B**		original / alternative
2.3 E 20V quattro	06.88 - 09.91	125	2309	5	7A	**T941C**	**T020B**		original / alternative
2.3 E 20V quattro	04.90 - 09.91	123	2309	5	7A	**T941C**	**T020B**		original / alternative
100 (44, 44Q, C3)									
1.8	08.82 - 12.87	55	1781	4	RS/DR	**T703C**	**T051B**		original / alternative
1.8	02.86 - 07.88	65	1781	4	SH	**T703C**	**T051B**		original / alternative
1.8	08.83 - 07.89	66	1781	4	JW /NP/DS	**T703C**	**T051B**		original / alternative
1.8 cat	03.85 - 11.90	66	1781	4	PH/4B	**T703C**	**T051B**		original / alternative
1.8 quattro	08.86 - 07.90	65	1781	4	SH	**T703C**	**T051B**		original / alternative
1.8 quattro	10.84 - 07.88	66	1781	4	JW /NP	**T703C**	**T051B**		original / alternative
1.8 quattro cat	08.85 - 11.90	66	1781	4	PH/4B	**T703C**	**T051B**		original / alternative
2.0	08.86 - 11.87	83	1994	5	SL	**T700C**	**T050B**	**T429B**	orig. / alter. / suppl.
2.0	08.84 - 12.87	85	1994	5	KP	**T700C**	**T050B**	**T429B**	orig. / alter. / suppl.
2.0 cat	01.88 - 11.90	85	1994	5	RT	**T700C**	**T050B**	**T429B**	orig. / alter. / suppl.
2.1	08.82 - 07.84	100	2144	5	WC	**T208B**			
2.2	10.84 - 09.86	85	2226	5	KZ	**T700C**	**T050B**	**T429B**	orig. / alter. / suppl.
2.2	08.84 - 12.88	101	2226	5	KU	**T700C**	**T050B**	**T429B**	orig. / alter. / suppl.
2.2 cat	06.89 - 11.90	101	2226	5	KU/HX	**T700C**	**T050B**	**T429B**	orig. / alter. / suppl.
2.2 E quattro	08.85 - 07.86	88	2226	5	PX	**T700C**	**T050B**	**T429B**	orig. / alter. / suppl.
2.2 E Turbo quattro	08.86 - 11.90	121	2226	5	MC	**T700C**	**T050B**	**T429B**	orig. / alter. / suppl.
2.2 quattro	08.84 - 12.88	101	2226	5	KU	**T700C**	**T050B**	**T429B**	orig. / alter. / suppl.
2.2 quattro cat	06.89 - 11.90	101	2226	5	KU/HX	**T700C**	**T050B**	**T429B**	orig. / alter. / suppl.
2.2 Turbo	08.86 - 11.90	121	2226	5	MC	**T700C**	**T050B**	**T429B**	orig. / alter. / suppl.
2.3 E	10.86 - 11.90	100	2309	5	NF	**T700C**	**T050B**	**T429B**	orig. / alter. / suppl.
2.3 E	01.90 - 11.90	98	2309	5	AAR	**T700C**	**T050B**	**T429B**	orig. / alter. / suppl.
2.3 E quattro	08.86 - 11.90	100	2309	5	NF	**T700C**	**T050B**	**T429B**	orig. / alter. / suppl.
2.3 quattro	01.90 - 11.90	98	2309	5	AAR	**T700C**	**T050B**	**T429B**	orig. / alter. / suppl.
100 (4A, C4)									
2.0	12.90 - 06.94	74	1984	4	AAE	**T593C**	**T034B**		original / alternative
2.0 E	12.90 - 06.94	85	1984	4	ABK/AAD	**T702C**	**T039B**	**T428B**	orig. / alter. / suppl.
2.0 E quattro	12.90 - 07.92	85	1984	4	AAD	**T702C**	**T039B**	**T428B**	orig. / alter. / suppl.

AUDI 100 (4A, C4)

model	year	kW	cm³	cyl	engine	I	II	III	info
100 (4A, C4)									
2.0 E 16V	01.92 - 06.94	103	1984	4	ACE	**T592C**	**T954B**		original / alternative
2.0 E 16V quattro	07.92 - 06.94	103	1984	4	ACE	**T592C**	**T954B**		original / alternative
2.3 E	12.90 - 06.94	98	2309	5	AAR	**T700C**	**T050B**	**T429B**	orig. / alter. / suppl.
2.3 E quattro	12.90 - 06.94	98	2309	5	AAR	**T700C**	**T050B**	**T429B**	orig. / alter. / suppl.
2.6	07.93 - 06.94	102	2598	6	ACZ	**T869C**	**T073B**		original / alternative
2.6 E quattro	08.93 - 07.94	102	2598	6	ACZ	**T869C**	**T073B**		original / alternative
2.6	03.92 - 06.94	110	2598	6	ABC	**T869C**	**T073B**		original / alternative
2.6 quattro	04.92 - 06.94	110	2598	6	ABC	**T869C**	**T073B**		original / alternative
2.8 E	12.90 - 06.94	128	2771	6	AAH	**T869C**	**T073B**		original / alternative
2.8 E quattro	12.90 - 06.94	128	2771	6	AAH	**T869C**	**T073B**		original / alternative
S4 V8 quattro	03.94 - 06.94	213	4172	8	AEC	**T589C**	**T979B**		original / alternative
S4 V8 quattro	10.92 - 06.94	206	4172	8	ABH	**T589C**	**T979B**		original / alternative
100 Avant (44, 44Q, C3)									
1.8	08.82 - 12.87	55	1781	4	RS/DR	**T703C**	**T051B**		original / alternative
1.8	02.86 - 07.90	65	1781	4	SH	**T703C**	**T051B**		original / alternative
1.8	08.83 - 07.89	66	1781	4	JW /NP/DS	**T703C**	**T051B**		original / alternative
1.8 cat	03.85 - 11.90	66	1781	4	PH/4B	**T703C**	**T051B**		original / alternative
1.8 quattro	08.86 - 07.90	65	1781	4	SH	**T703C**	**T051B**		original / alternative
1.8 quattro	10.84 - 07.88	66	1781	4	JW /NP	**T703C**	**T051B**		original / alternative
1.8 quattro cat	08.85 - 10.90	66	1781	4	PH/4B	**T703C**	**T051B**		original / alternative
2.0	09.86 - 11.87	83	1994	5	SL	**T700C**	**T050B**	**T429B**	orig. / alter. / suppl.
2.0 E	01.85 - 12.87	85	1994	5	KP	**T700C**	**T050B**	**T429B**	orig. / alter. / suppl.
2.0 E cat	01.88 - 11.90	85	1994	5	RT	**T700C**	**T050B**	**T429B**	orig. / alter. / suppl.
2.1	08.82 - 07.84	100	2144	5	WC	**T208B**			
2.2	10.84 - 09.86	85	2226	5	KZ	**T700C**	**T050B**	**T429B**	orig. / alter. / suppl.
2.2	08.84 - 12.88	101	2226	5	KU	**T700C**	**T050B**	**T429B**	orig. / alter. / suppl.
2.2 cat	06.89 - 11.90	101	2226	5	KU/HX	**T700C**	**T050B**	**T429B**	orig. / alter. / suppl.
2.2 E quattro	08.85 - 07.86	88	2226	5	PX	**T700C**	**T050B**	**T429B**	orig. / alter. / suppl.
2.2 quattro	08.84 - 12.88	101	2226	5	KU	**T700C**	**T050B**	**T429B**	orig. / alter. / suppl.
2.2 quattro cat	06.89 - 11.90	101	2226	5	KU/HX	**T700C**	**T050B**	**T429B**	orig. / alter. / suppl.
2.2 Turbo	08.86 - 11.90	121	2226	5	MC	**T700C**	**T050B**	**T429B**	orig. / alter. / suppl.
2.2 Turbo quattro	08.86 - 11.90	121	2226	5	MC	**T700C**	**T050B**	**T429B**	orig. / alter. / suppl.
2.3	08.86 - 11.90	100	2309	5	NF	**T700C**	**T050B**	**T429B**	orig. / alter. / suppl.
2.3	03.90 - 11.90	98	2309	5	AAR	**T700C**	**T050B**	**T429B**	orig. / alter. / suppl.
2.3 E quattro	08.86 - 11.90	100	2309	5	NF	**T700C**	**T050B**	**T429B**	orig. / alter. / suppl.
2.3 quattro	01.90 - 11.90	98	2309	5	AAR	**T700C**	**T050B**	**T429B**	orig. / alter. / suppl.
100 Avant (4A, C4)									
2.0 E	09.91 - 06.94	74	1984	4	AAE	**T593C**	**T034B**		original / alternative
2.0 E	09.91 - 06.94	85	1984	4	ABK/AAD	**T702C**	**T039B**	**T428B**	orig. / alter. / suppl.
2.0 E 16V	07.92 - 06.94	103	1984	4	ACE	**T592C**	**T954B**		original / alternative
2.0 E 16V quattro	07.92 - 06.94	103	1984	4	ACE	**T592C**	**T954B**		original / alternative
2.0 E quattro	12.90 - 07.92	85	1984	4	AAD	**T702C**	**T039B**	**T428B**	orig. / alter. / suppl.
2.3 E	09.91 - 06.94	98	2309	5	AAR	**T700C**	**T050B**	**T429B**	orig. / alter. / suppl.
2.3 E quattro	09.91 - 06.94	98	2309	5	AAR	**T700C**	**T050B**	**T429B**	orig. / alter. / suppl.
2.6	07.93 - 06.94	102	2598	6	ACZ	**T869C**	**T073B**		original / alternative
2.6 E quattro	08.93 - 07.94	102	2598	6	ACZ	**T869C**	**T073B**		original / alternative
2.6	03.92 - 06.94	110	2598	6	ABC	**T869C**	**T073B**		original / alternative
2.6 quattro	07.92 - 06.94	110	2598	6	ABC	**T869C**	**T073B**		original / alternative
2.8 E	09.91 - 06.94	128	2771	6	AAH	**T869C**	**T073B**		original / alternative
2.8 E quattro	09.91 - 06.94	128	2771	6	AAH	**T869C**	**T073B**		original / alternative
S4 V8 quattro	03.94 - 06.94	213	4172	8	AEC	**T589C**	**T979B**		original / alternative
S4 V8 quattro	10.92 - 06.94	206	4172	8	ABH	**T589C**	**T979B**		original / alternative
200 (44, 44Q)									
2.1 Turbo	08.83 - 01.88	134	2144	5	KG	**T700C**	**T050B**	**T429B**	orig. / alter. / suppl.
2.1 Turbo quattro	08.83 - 09.86	134	2144	5	KG	**T700C**	**T050B**	**T429B**	orig. / alter. / suppl.
2.2	08.84 - 07.85	101	2226	5	KU	**T700C**	**T050B**	**T429B**	orig. / alter. / suppl.
2.2 Turbo	08.85 - 09.91	121	2226	5	MC	**T700C**	**T050B**	**T429B**	orig. / alter. / suppl.
2.2 Turbo quattro	01.85 - 12.91	121	2226	5	MC	**T700C**	**T050B**	**T429B**	orig. / alter. / suppl.
2.3	11.86 - 09.91	100	2309	5	NF	**T700C**	**T050B**	**T429B**	orig. / alter. / suppl.
200 Avant (44, 44Q)									
2.1 Turbo quattro	09.83 - 01.88	134	2144	5	JY/KG	**T700C**	**T050B**	**T429B**	orig. / alter. / suppl.
2.2 Turbo	08.85 - 09.91	121	2226	5	MC	**T700C**	**T050B**	**T429B**	orig. / alter. / suppl.
2.2 Turbo quattro	09.83 - 12.90	121	2226	5	MC	**T700C**	**T050B**	**T429B**	orig. / alter. / suppl.
2.3	11.86 - 09.91	100	2309	5	NF	**T700C**	**T050B**	**T429B**	orig. / alter. / suppl.
A1 (8X1)									
1.2 TFSI	05.10 -	63	1197	4	CBZA	**T406C**	**T056B**		original / alternative
A1 Sportback (8XA)									
1.2 TFSI	01.12 -	63	1197	4	CBZA	**T406C**	**T056B**		original / alternative
A2 (8Z0)									
1.4	02.00 - 08.05	55	1390	4	AUA	**T874C**	**T004B**		original / alternative

AUDI A2 (8Z0)

model	year	kW	cm³	cyl	engine	I	II	III	info
A2 (8Z0)									
1.6	09.96 - 05.03	74	1595	4	AKL/APF/AEH	**T674C**	**T059B**		original / alternative
1.6	08.00 - 05.03	75	1595	4	AVU/BFQ	**T854C**	**T076B**		original / alternative
A3 (8L1)									
1.8	09.96 - 08.00	92	1781	4	AGN/APG	**T818C**	**T002B**		original / alternative
	09.00 - 05.03	92	1781	4	AGN/APG	**T559C**			
A3 (8P1)									
1.2 TSI	04.10 - 08.12	77	1197	4	CBZB	**T406C**	**T056B**		original / alternative
1.6	05.03 - 08.12	75	1595	4	BGU	**T854C**	**T076B**		original / alternative
A3 Cabriolet (8P7)									
1.2 TFSI	03.10 -	77	1197	4	CBZB	**T406C**	**T056B**		original / alternative
1.6	09.08 -	75	1595	4	BSE	**T855C**	**T077B**		original / alternative
A3 Sportback (8PA)									
1.2 TSI	04.10 -	77	1197	4	CBZB	**T406C**	**T056B**		original / alternative
1.6	09.04 -	75	1595	4	BGU	**T854C**	**T076B**		original / alternative
A4 (8D2, B5)									
1.6	11.94 - 10.00	74	1595	4	ARM	**T674C**	**T059B**		original / alternative
	11.94 - 10.00	74	1595	4	AHL/ANA	**T854C**	**T076B**		original / alternative
	11.94 - 10.00	74	1595	4	ADP	**T952C**	**T068B**		original / alternative
1.6	07.00 - 11.00	75	1595	4	ALZ	**T854C**	**T076B**		original / alternative
1.8	01.95 - 11.00	92	1781	4	ADR/APT/ARG	**T594C**	**T088B**		orig. / alter.-semidirect
1.8 quattro	01.95 - 11.00	92	1781	4	ADR/APT/ARG	**T594C**	**T088B**		orig. / alter.-semidirect
2.4	08.97 - 11.00	120	2393	6	AMM/APZ/AJG	**T887C**	**T003B**		original / alternative
2.4 quattro	08.97 - 11.00	120	2393	6	APZ	**T887C**	**T003B**		original / alternative
2.4	03.97 - 11.00	121	2393	6	AML/ARJ/ALF/AGA/APS	**T887C**	**T003B**		original / alternative
2.4 quattro	03.97 - 11.00	121	2393	6	AML/ARJ/ALF/AGA/APS	**T887C**	**T003B**		original / alternative
2.6	01.95 - 11.00	110	2598	6	ABC	**T887C**	**T003B**		original / alternative
2.6 quattro	01.95 - 11.00	110	2598	6	ABC	**T887C**	**T003B**		original / alternative
2.8	09.95 - 07.97	128	2771	6	AAH	**T869C**	**T073B**		original / alternative
2.8 quattro	01.95 - 07.97	128	2771	6	AAH	**T869C**	**T073B**		original / alternative
2.8	10.96 - 11.00	142	2771	6	APR/ACK/ALG/AHA/AQD	**T887C**	**T003B**		original / alternative
2.8 quattro	10.96 - 08.01	142	2771	6	APR/ACK/ALG/AHA/AQD	**T887C**	**T003B**		original / alternative
A4 (8E2, B6)									
1.6	11.00 - 12.04	75	1595	4	ALZ	**T854C**	**T076B**		original / alternative
2.4	09.01 - 12.04	120	2393	6	AMM	**T887C**	**T003B**		original / alternative
2.4	09.01 - 12.04	125	2393	6	BDV	**T887C**	**T003B**		original / alternative
A4 (8EC, B7)									
1.6	11.04 - 06.08	75	1595	4	ALZ	**T854C**	**T076B**		original / alternative
A4 Avant (8D5, B5)									
1.6	11.94 - 09.01	74	1595	4	ARM	**T674C**	**T059B**		original / alternative
	11.94 - 09.01	74	1595	4	AHL/ANA	**T854C**	**T076B**		original / alternative
	11.94 - 09.01	74	1595	4	ADP	**T952C**	**T068B**		original / alternative
1.6	07.00 - 09.01	75	1595	4	ALZ	**T854C**	**T076B**		original / alternative
1.8	02.96 - 09.01	92	1781	4	AVV/ADR/APT/ARG	**T594C**	**T088B**		orig. / alter.-semidirect
1.8 quattro	01.96 - 09.01	92	1781	4	ADR/APT/ARG	**T594C**	**T088B**		orig. / alter.-semidirect
2.4	03.97 - 09.01	121	2393	6	AML/ARJ/ALF/AGA/APS	**T887C**	**T003B**		original / alternative
2.4 quattro	03.97 - 09.01	121	2393	6	AML/ARJ/ALF/AGA/APS	**T887C**	**T003B**		original / alternative
2.4	08.97 - 09.01	120	2393	6	AMM/APZ/AJG	**T887C**	**T003B**		original / alternative
2.4 quattro	08.97 - 09.01	120	2393	6	APZ	**T887C**	**T003B**		original / alternative
2.6	02.96 - 09.01	110	2598	6	ABC	**T887C**	**T003B**		original / alternative
2.6 quattro	01.96 - 09.01	110	2598	6	ABC	**T887C**	**T003B**		original / alternative
2.8	03.96 - 09.96	128	2771	6	AAH	**T869C**	**T073B**		original / alternative
2.8 quattro	01.96 - 09.96	128	2771	6	AAH	**T869C**	**T073B**		original / alternative
2.8	10.96 - 09.01	142	2771	6	APR/ACK/ALG/AHA/AQD	**T887C**	**T003B**		original / alternative
2.8 quattro	10.96 - 09.01	142	2771	6	APR/ACK/ALG/AHA/AQD	**T887C**	**T003B**		original / alternative
A4 Avant (8E5, B6)									
1.6	09.01 - 12.04	75	1595	4	ALZ	**T854C**	**T076B**		original / alternative
2.4	09.01 - 12.04	120	2393	6	AMM	**T887C**	**T003B**		original / alternative
2.4	09.01 - 12.04	125	2393	6	BDV	**T887C**	**T003B**		original / alternative
A4 Avant (8ED, B7)									
1.6	11.04 - 06.08	75	1595	4	ALZ	**T854C**	**T076B**		original / alternative
A4 Cabriolet (8H7, B6, 8HE, B7)									
2.4	04.02 - 12.05	120	2393	6	AMM	**T887C**	**T003B**		original / alternative
2.4	04.02 - 12.05	125	2393	6	BDV	**T887C**	**T003B**		original / alternative
A6 (4A, C4)									
1.8	12.95 - 10.97	92	1781	4	ADR	**T594C**	**T088B**		orig. / alter.-semidirect
1.8 quattro	12.95 - 10.97	92	1781	4	ADR	**T594C**	**T088B**		orig. / alter.-semidirect
2.0	06.94 - 10.97	74	1984	4	AAE	**T702C**	**T039B**	**T428B**	orig. / alter. / suppl.
2.0	06.94 - 10.97	85	1984	4	ABK	**T702C**	**T039B**	**T428B**	orig. / alter. / suppl.
2.0 16V	06.94 - 10.97	103	1984	4	ACE	**T592C**	**T954B**		original / alternative

AUDI A6 (4A, C4)

model	year	kW	cm³	cyl	engine	I	II	III	info
A6 (4A, C4)									
2.0 16V quattro	06.94 - 10.97	103	1984	4	ACE	**T592C**	**T954B**		original / alternative
2.3	06.94 - 12.95	98	2309	5	AAR	**T675C**	**T094B**		original / alternative
2.3 quattro	06.94 - 12.95	98	2309	5	AAR	**T675C**	**T094B**		original / alternative
2.6	06.94 - 10.97	110	2598	6	ABC	**T869C**	**T073B**		original / alternative
2.6 quattro	06.94 - 10.97	110	2598	6	ABC	**T869C**	**T073B**		original / alternative
2.8	06.94 - 10.97	128	2771	6	AAH	**T869C**	**T073B**		original / alternative
2.8 quattro	06.94 - 10.97	128	2771	6	AAH	**T869C**	**T073B**		original / alternative
2.8	12.95 - 10.97	142	2771	6	ACK	**T887C**	**T003B**		original / alternative
2.8 quattro	12.95 - 10.97	142	2771	6	ACK	**T887C**	**T003B**		original / alternative
S6 4.2 quattro	06.94 - 10.97	213	4172	8	AEC	**T589C**	**T979B**		original / alternative
A6 (4B, C5)									
2.4	07.98 - 01.05	100	2393	6	ARN/ASM/ALW	**T887C**	**T003B**		original / alternative
2.4	02.97 - 01.05	121	2393	6	AML/ARJ/ALF/AGA/APS	**T887C**	**T003B**		original / alternative
2.4 quattro	02.97 - 01.05	121	2393	6	AML/ARJ/ALF/AGA/APS	**T887C**	**T003B**		original / alternative
2.4	02.97 - 01.05	120	2393	6	AMM/APZ/AJG	**T887C**	**T003B**		original / alternative
2.4 quattro	02.97 - 01.05	120	2393	6	APZ/AJG	**T887C**	**T003B**		original / alternative
2.4	02.97 - 01.05	115	2393	6	APC	**T887C**	**T003B**		original / alternative
2.4 quattro	08.98 - 07.99	115	2393	6	APC	**T887C**	**T003B**		original / alternative
2.4	08.01 - 01.05	125	2393	6	BDV	**T887C**	**T003B**		original / alternative
2.4 quattro	08.01 - 01.05	125	2393	6	BDV	**T887C**	**T003B**		original / alternative
2.7 T quattro	08.01 - 01.05	184	2671	6	BES/ARE	**T887C**	**T003B**		original / alternative
2.8	02.97 - 01.05	142	2771	6	APR/ACK/ALG/AHA/AQD	**T887C**	**T003B**		original / alternative
2.8 quattro	02.97 - 01.05	142	2771	6	APR/ACK/ALG/AHA/AQD	**T887C**	**T003B**		original / alternative
2.8	10.97 - 05.00	132	2771	6	AGE	**T887C**	**T003B**		original / alternative
2.8 quattro	01.98 - 04.00	132	2771	6	AGE	**T887C**	**T003B**		original / alternative
2.8	07.99 - 01.05	140	2771	6	ATX	**T887C**	**T003B**		original / alternative
A6 Avant (4A, C4)									
1.8	12.95 - 12.97	92	1781	4	ADR	**T594C**	**T088B**		orig. / alter.-semidirect
1.8 quattro	12.95 - 12.97	92	1781	4	ADR	**T594C**	**T088B**		orig. / alter.-semidirect
2.0	06.94 - 12.97	74	1984	4	AAE	**T702C**	**T039B**	**T428B**	orig. / alter. / suppl.
2.0	06.94 - 12.97	85	1984	4	ABK	**T702C**	**T039B**	**T428B**	orig. / alter. / suppl.
2.0 16V	06.94 - 12.97	103	1984	4	ACE	**T592C**	**T954B**		original / alternative
2.0 16V quattro	06.94 - 12.97	103	1984	4	ACE	**T592C**	**T954B**		original / alternative
2.3	06.94 - 12.95	98	2309	5	AAR	**T675C**	**T094B**		original / alternative
2.3 quattro	06.94 - 12.95	98	2309	5	AAR	**T675C**	**T094B**		original / alternative
2.6	06.94 - 12.97	110	2598	6	ABC	**T869C**	**T073B**		original / alternative
2.6 quattro	06.94 - 12.97	110	2598	6	ABC	**T869C**	**T073B**		original / alternative
2.8	06.94 - 12.97	128	2771	6	AAH	**T869C**	**T073B**		original / alternative
2.8 quattro	06.94 - 12.97	128	2771	6	AAH	**T869C**	**T073B**		original / alternative
2.8	12.95 - 12.97	142	2771	6	ACK	**T887C**	**T003B**		original / alternative
2.8 quattro	12.95 - 12.97	142	2771	6	ACK	**T887C**	**T003B**		original / alternative
S6 4.2 quattro	06.94 - 12.97	213	4172	8	AEC	**T589C**	**T979B**		original / alternative
A6 Avant (4B, C5)									
2.4	12.97 - 01.05	120	2393	6	AMM/APZ/AJG	**T887C**	**T003B**		original / alternative
2.4 quattro	12.97 - 01.05	120	2393	6	APZ/AJG	**T887C**	**T003B**		original / alternative
2.4	12.97 - 01.05	121	2393	6	AML/ARJ/ALF/AGA/APS	**T887C**	**T003B**		original / alternative
2.4 quattro	12.97 - 01.05	121	2393	6	AML/ARJ/ALF/AGA/APS	**T887C**	**T003B**		original / alternative
2.4	12.97 - 01.05	115	2393	6	APC	**T887C**	**T003B**		original / alternative
2.4 quattro	08.98 - 05.01	115	2393	6	APC	**T887C**	**T003B**		original / alternative
2.4	07.98 - 01.05	100	2393	6	ARN/ASM/ALW	**T887C**	**T003B**		original / alternative
2.4	08.01 - 01.05	125	2393	6	BDV	**T887C**	**T003B**		original / alternative
2.4 quattro	08.01 - 01.05	125	2393	6	BDV	**T887C**	**T003B**		original / alternative
2.8	12.97 - 05.00	132	2771	6	AGE	**T887C**	**T003B**		original / alternative
2.8	07.99 - 01.05	140	2771	6	ATX	**T887C**	**T003B**		original / alternative
2.8	12.97 - 01.05	142	2771	6	APR/ACK/ALG/AHA/AQD	**T887C**	**T003B**		original / alternative
2.8 quattro	12.97 - 01.05	142	2771	6	APR/ACK/ALG/AHA/AQD	**T887C**	**T003B**		original / alternative
A8 (4D2, 4D8)									
2.8	03.94 - 03.96	128	2771	6	AAH	**T869C**	**T073B**		original / alternative
2.8 quattro	03.94 - 03.96	128	2771	6	AAH	**T869C**	**T073B**		original / alternative
2.8	07.95 - 03.96	120	2771	6	AEJ	**T869C**	**T073B**		original / alternative
2.8 quattro	07.95 - 03.96	120	2771	6	AEJ	**T869C**	**T073B**		original / alternative
2.8	04.96 - 09.02	142	2771	6	APR/ACK/AQD/AMX	**T887C**	**T003B**		original / alternative
2.8 quattro	04.96 - 09.02	142	2771	6	APR/ACK/AQD/AMX	**T887C**	**T003B**		original / alternative
Cabriolet (8G7, B4)									
1.8	01.97 - 08.00	92	1781	4	ADR	**T594C**	**T078B**		orig. / alter.-semidirect
2.0 E	01.93 - 07.98	85	1984	4	ABK	**T701C**	**T038B**	**T207B**	orig. / alter. / suppl.
2.3 E	05.91 - 07.94	98	2309	5	NG	**T700C**	**T050B**	**T429B**	orig. / alter. / suppl.
2.6	06.93 - 08.00	110	2598	6	ABC	**T869C**	**T073B**		original / alternative
2.8	11.92 - 08.00	128	2771	6	AAH	**T869C**	**T073B**		original / alternative

AUDI COUPE (81, 85)

model	year	kW	cm³	cyl	engine	I	II	III	info
Coupe (81, 85)									
1.8 GT	09.82 - 10.88	66	1781	4	DS/JV	**T703C**	**T051B**		original / alternative
1.8 GT	01.85 - 07.88	68	1781	4	JN	**T703C**	**T051B**		original / alternative
1.8 GT	08.86 - 10.87	79	1781	4	PV	**T703C**	**T051B**		original / alternative
1.8 GT	08.86 - 10.88	82	1781	4	DZ	**T703C**	**T051B**		original / alternative
1.8 GT quattro	12.84 - 10.88	82	1781	4	DZ	**T703C**	**T051B**		original / alternative
1.9	08.80 - 07.83	85	1921	5	WN	**T208B**			
2.0	09.83 - 07.86	85	1994	5	JS/HP	**T700C**	**T050B**	**T429B**	orig. / alter. / suppl.
2.0	03.86 - 04.88	83	1994	5	SK	**T700C**	**T050B**	**T429B**	orig. / alter. / suppl.
2.1 GT	01.81 - 07.83	79	2144	5	WE	**T208B**			
2.1 GT	09.82 - 08.84	96	2144	5	KE/KL	**T208B**			
2.2 GT	07.81 - 10.87	85	2226	5	KX	**T700C**	**T050B**	**T429B**	orig. / alter. / suppl.
2.2 GT	09.84 - 10.88	100	2226	5	KV/HY	**T700C**	**T050B**	**T429B**	orig. / alter. / suppl.
2.2 quattro	10.84 - 10.88	100	2226	5	KV	**T700C**	**T050B**	**T429B**	orig. / alter. / suppl.
2.2 quattro	08.85 - 10.88	88	2226	5	JT	**T700C**	**T050B**	**T429B**	orig. / alter. / suppl.
2.3	01.87 - 10.88	100	2309	5	NG	**T700C**	**T050B**	**T429B**	orig. / alter. / suppl.
2.3 quattro	01.87 - 10.88	100	2309	5	NG	**T700C**	**T050B**	**T429B**	orig. / alter. / suppl.
Coupe (89, 8B)									
1.8	08.89 - 07.91	82	1781	4	DZ	**T703C**	**T051B**		original / alternative
2.0	05.89 - 12.96	85	1984	4	AAD	**T701C**	**T038B**	**T207B**	orig. / alter. / suppl.
2.0	03.90 - 07.90	82	1984	4	3A	**T701C**	**T038B**	**T207B**	orig. / alter. / suppl.
2.0	05.89 - 03.90	83	1984	4	3A	**T701C**	**T038B**	**T207B**	orig. / alter. / suppl.
2.0 16 V	08.92 - 12.96	103	1984	4	ACE	**T590C**	**T944B**		original / alternative
2.0 16 V	01.92 - 07.92	101	1984	4	6A	**T591C**	**T945B**		original / alternative
2.0 20 V	08.89 - 07.91	118	1994	5	NM	**T941C**	**T020B**		original / alternative
2.0 20 V quattro	08.89 - 07.91	118	1994	5	NM	**T941C**	**T020B**		
2.3	10.88 - 07.94	100	2309	5	NG	**T700C**	**T050B**	**T429B**	orig. / alter. / suppl.
2.3	03.90 - 12.96	98	2309	5	NG	**T700C**	**T050B**	**T429B**	orig. / alter. / suppl.
2.3 20V	08.90 - 07.91	123	2309	5	7A	**T941C**	**T020B**		original / alternative
2.3 20V	08.89 - 07.91	125	2309	5	7A	**T941C**	**T020B**		original / alternative
2.3 20V quattro	11.88 - 07.91	125	2309	5	7A	**T941C**	**T020B**		original / alternative
2.3 20V quattro	05.90 - 12.96	123	2309	5	7A	**T941C**	**T020B**		original / alternative
2.3 quattro	11.88 - 12.92	100	2309	5	NG	**T700C**	**T050B**	**T429B**	orig. / alter. / suppl.
2.3 quattro	05.90 - 12.96	98	2309	5	NG	**T700C**	**T050B**	**T429B**	orig. / alter. / suppl.
2.6	08.92 - 12.96	110	2598	6	ABC	**T869C**	**T073B**		original / alternative
2.6 quattro	08.92 - 12.96	110	2598	6	ABC	**T869C**	**T073B**		original / alternative
2.8	09.91 - 12.96	128	2771	6	AAH	**T869C**	**T073B**		original / alternative
2.8 quattro	08.91 - 12.96	128	2771	6	AAH	**T869C**	**T073B**		original / alternative
V8 (44_, 4C_)									
3.6 quattro	04.93 - 02.94	180	3562	8	PT	**T589C**	**T979B**		original / alternative
3.6 quattro	10.88 - 02.94	184	3562	8	PT	**T589C**	**T979B**		original / alternative
4.2 quattro	10.91 - 02.94	206	4172	8	ABH	**T589C**	**T979B**		original / alternative
AZLK									
412 Moskvitch									
1.5	67 - 77	55	1478	4	UZAM 412	**T635S**	**T634H**		premium / basic
2137, 2140 Moskvitch									
1.5	12.75 - 06.88	55	1478	4	UZAM 412 / UZAM 331.10	**T635S**	**T634H**		premium / basic
2141 Aleko									
1.5	08.87 - 06.95	53	1479	4	UZAM 331.10	**T357S**	**T136H**	**T414M**	premium / basic / inductive
1.6	11.97 - 12.01	54	1569	4	VAZ 2106	**T359S**	**T340H**	**T416M**	premium / basic / inductive
1.7	06.95 - 12.01	63	1699	4	UZAM 3317	**T357S**	**T136H**	**T414M**	premium / basic / inductive
2141									
1.6 Svjatogor	11.97 - 12.01	54	1569	4	VAZ 2106	**T359S**	**T340H**	**T416M**	premium / basic / inductive
1.8 J. Dolgorukij	11.97 - 12.01	60	1800	4	VAZ 2130	**T359S**	**T340H**	**T416M**	premium / basic / inductive
1.8 J. Dolgorukij	11.97 - 12.01	63	1800	4	UZAM 3318	**T357S**	**T136H**	**T414M**	premium / basic / inductive
1.8 Svjatogor	11.97 - 12.01	63	1800	4	UZAM 3318	**T357S**	**T136H**	**T414M**	premium / basic / inductive
2.0i Svjatogor	11.97 - 12.01	77	2000	4	F3R272	**T673S**	**T672H**		premium / basic
2.0i J. Dolgorukij	11.97 - 12.01	77	2000	4	F3R272	**T673S**	**T672H**		premium / basic
2142									
2.0 i	11.97 - 12.01	77	2000	4	F3R272	**T673S**	**T672H**		premium / basic
Pick-Up (2335, 2901)									
1.6	01.92 - 12.01	54	1569	4	VAZ 2106	**T359S**	**T340H**	**T416M**	premium / basic / inductive
1.7	01.92 - 12.01	63	1699	4	UZAM 3317	**T357S**	**T136H**	**T414M**	premium / basic / inductive
1.8	01.92 - 12.01	63	1800	4	UZAM 3318	**T357S**	**T136H**	**T414M**	premium / basic / inductive
BMW									
3 (E21)									
315	03.81 - 03.84	55	1573	4	M10 B16	**T437B**			
316	08.75 - 08.80	66	1573	4	M10 B16	**T437B**			
316	09.80 - 08.82	66	1766	4	M10 B18	**T437B**			

BMW 3 (E21) ▶

model	year	kW	cm³	cyl	engine	I	II	III	info
3 (E21)									
318 i	11.79 - 08.82	77	1766	4	M10 B18	**T437B**			
320/6	09.77 - 08.82	90	1990	6	M20 B20	**T717C**	**T023B**		original / alternative
323 i	01.78 - 08.82	105	2316	6	M20 B23	**T717C**	**T023B**		original / alternative
3 (E30)									
315	09.82 - 12.91	55	1573	4	M10 B16	**T437B**			
316	09.82 - 12.87	66	1766	4	M10 B18	**T437B**			
316 Ecotronic	09.83 - 12.90	66	1766	4	M10 B18	**T437B**			
316 i	09.87 - 06.91	73	1596	4	M40 B16	**T176C**	**T028B**	**T907C**	orig. / alter. / suppl.
316 i	07.88 - 06.91	75	1596	4	M40 B16	**T176C**	**T028B**	**T907C**	orig. / alter. / suppl.
316 i	08.87 - 08.88	75	1766	4	M10 B18	**T437B**			
318 i	12.84 - 08.88	75	1766	4	M10 B18	**T437B**			
318 i	09.82 - 08.87	77	1766	4	M10 B18	**T437B**			
318 i	09.87 - 06.91	85	1796	4	M40 B18	**T176C**	**T028B**	**T907C**	orig. / alter. / suppl.
318 i	09.87 - 06.91	83	1796	4	M40 B18	**T176C**	**T028B**	**T907C**	orig. / alter. / suppl.
318 is	09.89 - 08.91	100	1796	4	M42 B18	**T114C**			
320 i	12.85 - 06.91	95	1991	6	M20 B20	**T174C**	**T031B**	**T718C**	orig. / alter. / suppl.
320 i	09.82 - 12.85	92	1990	6	M20 B20	**T717C**	**T023B**		original / alternative
323 i	09.82 - 08.83	102	2316	6	M20 B23	**T717C**	**T023B**		original / alternative
323 i	09.83 - 08.86	110	2316	6	M20 B23	**T717C**	**T023B**		original / alternative
325 e 2.7	10.83 - 12.88	90	2693	6	M20 B27	**T174C**	**T031B**	**T718C**	orig. / alter. / suppl.
325 i	12.86 - 06.91	125	2494	6	M20 B25	**T174C**	**T031B**	**T718C**	orig. / alter. / suppl.
325 i	09.83 - 11.89	126	2494	6	M20 B25	**T174C**	**T031B**	**T718C**	orig. / alter. / suppl.
325 i X	12.86 - 08.91	125	2494	6	M20 B25	**T174C**	**T031B**	**T718C**	orig. / alter. / suppl.
M3 2.3	07.86 - 06.91	143	2303	4	S14 B23	**T719C**	**T719B**		original / alternative
M3 2.3	02.87 - 05.89	147	2303	4	S14 B23	**T719C**	**T719B**		original / alternative
M3 2.3	06.89 - 06.91	158	2303	4	S14 B23	**T719C**	**T719B**		original / alternative
M3 EVO I 2.3	10.88 - 10.90	162	2302	4	S14 B23 (EVO I)	**T719C**	**T719B**		original / alternative
M3 EVO II 2.5	01.90 - 01.92	175	2467	4	S14 B25 (EVO II)	**T719C**	**T719B**		original / alternative
3 (E36)									
316 i	09.90 - 09.93	73	1596	4	M40 B16	**T176C**	**T028B**	**T907C**	orig. / alter. / suppl.
316 i	07.93 - 02.98	75	1596	4	M43 B16	**T781C**	**T032B**		original / alternative
316 i	09.90 - 09.93	75	1596	4	M43 B16/M40 B16	**T176C**	**T028B**	**T907C**	orig. / alter. / suppl.
318 i	12.90 - 10.93	83	1796	4	M40 B18	**T176C**	**T028B**	**T907C**	orig. / alter. / suppl.
318 i	10.93 - 02.98	85	1796	4	M43 B18	**T810C**	**T080B**		original / alternative
318 is	10.93 - 02.98	103	1796	4	M42 B18	**T782C**			
318 is	09.95 - 02.98	103	1895	4	M44 B19	**T782C**			
3 (E46)									
316 i	04.00 - 02.05	77	1596	4	M43 B16 (164E3)/M43 B16	**T810C**	**T080B**		original / alternative
316 i 1.8	09.98 - 02.05	77	1895	4	M43 B19 (194E1)	**T810C**	**T080B**		original / alternative
318 i	02.98 - 09.01	87	1895	4	M43 B19/M43 B19 TU	**T810C**	**T080B**		original / alternative
3 Cabriolet (E30)									
318 i	09.90 - 10.93	83	1796	4	M40 B18	**T176C**	**T028B**	**T907C**	orig. / alter. / suppl.
320 i	04.86 - 10.93	95	1990	6	M20 B20	**T174C**	**T031B**	**T718C**	orig. / alter. / suppl.
325 i	09.87 - 10.93	125	2494	6	M20 B25	**T174C**	**T031B**	**T718C**	orig. / alter. / suppl.
M3 2.3	06.88 - 06.91	143	2303	4	S14 B23	**T719C**	**T719B**		original / alternative
3 Cabriolet (E36)									
318 i	01.94 - 04.99	85	1796	4	M43 B18	**T810C**	**T080B**		original / alternative
3 Cabriolet (E46)									
318 Ci	09.01 -	105	1995	4	N42 B20/N46 B20	**T811C**	**T075B**		original / alternative
3 Compact (E36)									
316 g	12.95 - 08.00	75	1596	4	M43 B16	**T781C**	**T032B**		original / alternative
316 i	03.94 - 08.00	75	1596	4	M43 B16	**T781C**	**T032B**		original / alternative
316 i	12.98 - 08.00	77	1895	4	M43 B19 (194E1)	**T810C**	**T080B**		original / alternative
318 ti	11.94 - 08.95	103	1796	4	M42 B18	**T782C**			
318 ti	07.95 - 08.00	103	1895	4	M44 B19	**T782C**			
3 Coupe (E36)									
316 i	09.93 - 04.99	75	1596	4	M43 B16	**T781C**	**T032B**		original / alternative
318 is	03.92 - 10.95	103	1796	4	M42 B18	**T782C**			
318 is	09.95 - 04.99	103	1895	4	M44 B19	**T782C**			
3 Coupe (E46)									
316 Ci	04.00 -	77	1596	4	M43 B16 (164E3)	**T810C**	**T080B**		original / alternative
318 Ci	11.99 - 09.01	87	1895	4	M43 B19	**T810C**	**T080B**		original / alternative
3 Touring (E30)									
316 i	09.91 - 06.94	73	1596	4	M40 B16	**T176C**	**T028B**	**T907C**	orig. / alter. / suppl.
316 i	09.91 - 06.94	75	1596	4	M40 B16	**T176C**	**T028B**	**T907C**	orig. / alter. / suppl.
318 i	04.89 - 06.94	83	1796	4	M40 B18	**T176C**	**T028B**	**T907C**	orig. / alter. / suppl.
318 i	09.87 - 06.91	85	1796	4	M40 B18	**T176C**	**T028B**	**T907C**	orig. / alter. / suppl.
320 i	01.88 - 12.91	95	1991	6	M20 B20	**T174C**	**T031B**	**T718C**	orig. / alter. / suppl.
325 i	07.87 - 03.93	125	2494	6	M20 B25	**T174C**	**T031B**	**T718C**	orig. / alter. / suppl.
325 i X	06.88 - 10.93	125	2494	6	M20 B25	**T174C**	**T031B**	**T718C**	orig. / alter. / suppl.

BMW 3 Touring (E36)

model	year	kW	cm³	cyl	engine	I	II	III	info
3 Touring (E36)									
316 i	01.96 - 10.99	75	1596	4	M43 B16	**T781C**	**T032B**		original / alternative
318 i	07.95 - 10.99	85	1796	4	M43 B18	**T810C**	**T080B**		original / alternative
3 Touring (E46)									
318 i	10.99 - 09.01	87	1895	4	M43 B19/M43 B19 TU	**T810C**	**T080B**		original / alternative
5 (E28)									
518 i	09.83 - 12.87	77	1766	4	M10 B18	**T437B**			
520 i	06.81 - 12.87	92	1990	6	M20 B20	**T717C**	**T023B**		original / alternative
520 i	08.85 - 12.87	95	1990	6	M20 B20	**T175C**	**T033B**	**T886C**	orig. / alter. / suppl.
525 i	06.81 - 12.87	110	2495	6	M20 B25E	**T716C**	**T030B**		original / alternative
528 i	06.81 - 12.87	135	2788	6	M30 B28	**T716C**	**T030B**		original / alternative
535 i, M 535 i	01.85 - 12.87	136	3430	6	M30 B35	**T173C**	**T027B**	**T715C**	orig. / alter. / suppl.
535 i, M 535 i	01.85 - 12.87	141	3430	6	M30 B35 (Motronic)	**T173C**	**T027B**	**T715C**	orig. / alter. / suppl.
535 i, M 535 i	01.85 - 12.87	160	3430	6	M30 B35	**T173C**	**T027B**	**T715C**	orig. / alter. / suppl.
5 (E34)									
518 i	08.89 - 09.95	85	1796	4	M43 B18	**T810C**	**T080B**		original / alternative
520 i	01.88 - 08.91	95	1990	6	M20 B20	**T175C**	**T033B**	**T886C**	orig. / alter. / suppl.
525 i	01.88 - 08.91	125	2494	6	M20 B25	**T175C**	**T033B**	**T886C**	orig. / alter. / suppl.
530 i	01.88 - 08.91	138	2986	6	M30 B30	**T173C**	**T027B**	**T715C**	orig. / alter. / suppl.
535 i	01.88 - 09.95	155	3430	6	M30 B35	**T173C**	**T027B**	**T715C**	orig. / alter. / suppl.
M 3.6	10.88 - 05.92	232	3535	6	S38 B36	**T720C**	**T720B**		original / alternative
M 3.6 cat	10.88 - 05.92	232	3535	6	S38 B36	**T720C**	**T720B**		original / alternative
5 Touring (E34)									
518 g	11.95 - 06.96	85	1796	4	M43 B18	**T811C**	**T075B**		original / alternative
518 i	09.94 - 01.97	85	1796	4	M43 B18	**T811C**	**T075B**		original / alternative
6 (E24)									
628 CSi	09.79 - 08.87	135	2788	6	M30 B28	**T716C**	**T030B**		original / alternative
635 CSi	08.87 - 05.89	155	3430	6	M30 B35	**T940C**	**T029B**		original / alternative
635 CSi	01.85 - 05.89	136	3430	6	M30 B35 (Motronic,8:1,cat.)	**T940C**	**T029B**		original / alternative
M 635 CSi	03.84 - 05.89	211	3453	6	S38 B35	**T720C**	**T720B**		original / alternative
7 (E23)									
728 i	07.78 - 08.86	135	2788	6	M30 B28	**T716C**	**T030B**		original / alternative
735 i	01.85 - 08.86	136	3430	6	M30 B35 (Motronic,8:1,cat.)	**T940C**	**T029B**		original / alternative
735 i	09.79 - 08.86	160	3453	6	M30 B35 (Motronic,9.3:1)	**T940C**	**T029B**		original / alternative
7 (E32)									
730 i,iL	12.86 - 09.94	145	2986	6	M30 B30	**T173C**	**T027B**	**T715C**	orig. / alter. / suppl.
730 i,iL	12.86 - 09.94	138	2986	6	M30 B30	**T173C**	**T027B**	**T715C**	orig. / alter. / suppl.
735 i,iL	09.86 - 09.92	155	3430	6	M30 B35	**T173C**	**T027B**	**T715C**	orig. / alter. / suppl.
735 i,iL	09.86 - 12.87	162	3430	6	M30 B35 (Motronic,9.2:1)	**T173C**	**T027B**	**T715C**	orig. / alter. / suppl.
Z3 (E36)									
1.8	10.95 - 10.98	85	1796	4	M43 B18	**T810C**	**T080B**		original / alternative
1.9	10.95 - 03.99	103	1895	4	M44 B19	**T782C**			
1.9	07.98 - 01.03	87	1895	4	M43 B19/ _ TU/M43 194 E1	**T811C**	**T075B**		original / alternative
1.9	01.99 - 01.03	85	1895	4	M43 194 E1	**T811C**	**T075B**		original / alternative
BYD									
Flyer I - II									
0.8	98 -	30	796	3	HH368QA1	**T334B**			
CHERY									
A1 /S12/									
1.3	08 -	62	1297	4	SQR473F	**T337B**			
A5 /A21/									
1.6	06 -	88	1597	4	SQR481F	**T314B**			
Amulet /A15/									
1.6	08.03 - 10	69	1596	4	SQR480ED	**T312B**			
Amulet FL /A15FL/									
1.5	10 -	80	1497	4	SQR477F	**T360B**			
Bonus /A13/									
1.5	08 -	80	1497	4	SQR477F	**T360B**			
Elara /A21/									
1.6	06 -	88	1597	4	SQR481F	**T314B**			
Fora /A21/									
1.6	06 -	88	1597	4	SQR481F	**T314B**			
Kimo /S12/									
1.3	08 -	62	1297	4	SQR473F	**T337B**			
Tiggo /T11/									
1.8i 16V	04.10 - 12.14	97	1845	4	SQR481FC	**T360B**[1)]	**T314B**[2)]		s. plug boot: length 150[1)]/125[2)] mm
2.4	11.05 - 08.12	95	2350	4	4G64S4M	**T313B**			
2.4 4X4	11.05 - 08.12	95	2350	4	4G64S4M	**T313B**			

CHERY Tiggo FL ▶

model	year	kW	cm³	cyl	engine	I	II	III	info
Tiggo FL /T11FL/									
1.8i 16V	08.13 - 11.16	97	1845	4	SQR481FC	**T360B**[1]	**T314B**[2]		s. plug boot: length 150[1]/125[2] mm
Very /A13/									
1.5	08 -	80	1497	4	SQR477F	**T360B**			
QQ Sweet /S11/									
1.0	05 - 09	39	1051	4	DA465Q	**T335B**			
CHEVROLET									
Aveo CC (T200)									
1.2	01.04 - 05.08	53	1150	4	F12S3	**T888B**			
Aveo CC (T250, T255)									
1.2	10.08 -	53	1150	4	F12S3	**T888B**			
1.2	04.08 -	62	1206	4	LMU/B12D1	**T697B**			
1.2 LPG	04.08 -	62	1206	4	B12D1	**T697B**			
1.4	04.08 -	74	1399	4	A 14 XER/LDT/F14D4	**T711B**			
Aveo CC (T300)									
1.2	03.11 -	51	1229	4	A 12 XEL	**T697B**			
1.2	03.11 -	63	1229	4	A 12 XER	**T697B**			
Aveo Sedan (T250, T255)									
1.2	01.08 -	62	1206	4	LMU/B12D1	**T888B**			
1.2	03.06 -	53	1150	4	F12S3/LQ5	**T888B**			
1.4	03.06 -	69	1399	4	F14D3/L14	**T711B**			
1.4	01.08 -	74	1399	4	F14D4	**T711B**			
1.5	05.05 -	62	1498	4	F15S3	**T738B**			
1.5	05.05 -	62	1498	4	LX6	**T697B**			
Aveo Sedan (T300)									
1.2	03.11 -	63	1229	4	A 12 XER	**T697B**			
1.2	03.11 -	51	1229	4	A 12 XEL	**T697B**			
Blazer S10									
4.3	09.88 - 08.94	115	4300	6	LB4	**T190B**			
Captiva (C100, C140)									
2.4	06.06 -	100	2405	4	Z 24 SED	**T777C**	**T986B**		original / alternative
2.4 4WD	06.06 -	100	2405	4	Z 24 SED	**T777C**	**T986B**		original / alternative
2.4	12.06 -	103	2405	4	Z 24 SED	**T777C**	**T986B**		original / alternative
2.4 4WD	12.06 -	103	2405	4	Z 24 SED	**T777C**	**T986B**		original / alternative
2.4 LPG	01.07 -	100	2405	4	Z 24 SED	**T777C**	**T986B**		original / alternative
2.4 LPG 4WD	01.07 -	100	2405	4	Z 24 SED	**T777C**	**T986B**		original / alternative
Cruze (J300)									
1.6	05.09 -	91	1598	4	F16D4	**T711B**			
1.6	05.09 -	80	1598	4	LXV/F16D3/LXT	**T711B**			
1.6	05.09 -	83	1598	4	F16D4	**T711B**			
Evanda									
2.0	03.05 -	96	1998	4	X 20 SED	**T777C**	**T986B**		original / alternative
Kalos									
1.2	03.05 -	53	1150	4	B12S1	**T888B**			
1.4	03.05 -	61	1399	4	F14S3	**T738B**	**T699B**		
1.4 16V	03.05 -	69	1399	4	F14D3	**T711B**			
Kalos Sedan									
1.2	03.05 -	53	1150	4	F12S3	**T888B**			
1.4	03.05 -	61	1399	4	F14S3	**T738B**	**T699B**		
1.4 16V	03.05 -	69	1399	4	F14D3	**T711B**			
Lacetti (J200)									
1.4 16V	03.05 -	70	1399	4	F14D3	**T923B**			
1.6	03.05 -	80	1598	4	F16D3	**T923B**			
1.8	03.05 -	90	1799	4	T18SED	**T777C**	**T986B**		original / alternative
1.8	08.05 -	89	1796	4	F18D3	**T777C**	**T986B**		original / alternative
Lacetti Combi (J200)									
1.6 LPG	06.09 - 12.11	80	1598	4	F16D3	**T923B**			
Lacetti Sedan									
1.4	03.05 - 03.13	69	1399	4	F14D3	**T923B**			
1.6 LPG	03.05 - 03.13	80	1598	4	F16D3	**T923B**			
Lanos Sedan									
1.5	11.05 -	63	1498	4	A15SMS	**T738B**	**T699B**		
Matiz (M200, M250)									
0.8	03.05 -	38	796	3	F8CV	**T892B**			
0.8 LPG	03.05 -	38	796	3	F8CV	**T892B**			
1.0	03.05 -	47	995	4	B10S	**T888B**			
1.0	03.05 -	49	995	4	B10S1	**T888B**			
1.0 LPG	03.05 -	49	995	4	B10S1	**T888B**			

CHEVROLET Nubira Combi ▶

model	year	kW	cm³	cyl	engine	I	II	III	info
Nubira Combi									
1.6	03.05 -	80	1598	4	F16D3	**T923B**			
1.8	03.05 -	90	1799	4	T18SED	**T777C**	**T986B**		original / alternative
Nubira Sedan									
1.4	01.06 -	70	1399	4	F14D3	**T923B**			
1.4	01.05 -	69	1399	4	F14D3	**T923B**			
1.6	03.05 -	80	1598	4	F16D3	**T923B**			
1.8	03.05 -	90	1799	4	T18SED	**T777C**	**T986B**		original / alternative
Spark									
0.8	09.00 - 12.04	38	796	3	F8CV	**T892B**			
0.8	05.05 -	37	796	3	F8CV	**T892B**			
1.0 SX	05.05 -	46	995	4	LA2/B10S	**T888B**			
1.0 SX	05.05 -	49	995	4	B10S1	**T888B**			
Spark (M300)									
1.0	03.10 -	50	995	4	B10D1	**T697B**			
1.0 LPG	07.10 -	48	995	4	B10D1	**T697B**			
1.0 LPG	03.10 -	50	995	4	B10D1	**T697B**			
1.2	03.10 -	60	1206	4	B12D1	**T697B**			
1.2 LPG	03.10 -	58	1206	4	B12D1	**T697B**			
Tacuma / Rezzo									
1.6	03.05 -	77	1598	4	A16DMS	**T711B**			
1.6	08.05 -	79	1598	4	A16DMS	**T711B**			
2.0	03.05 -	89	1998	4	T20SED	**T777C**	**T986B**		original / alternative
2.0	08.05 -	90	1998	4	T20SED	**T777C**	**T986B**		original / alternative
CHRYSLER									
Cirrus									
2.0 LX	10.97 - 09.00	98	1996	4	ECB	**T107B**			
Concorde									
3.5 LX	10.92 - 09.97	155	3518	6	EGE	**T192B**			
Crossfire									
3.2	07.03 - 12.07	160	3199	6	EGX	**T808C**	**T071B**		original / alternative
3.2 SRT-6	09.04 - 12.07	246	3199	6	EGZ	**T808C**	**T071B**		original / alternative
Crossfire Roadster									
3.2	05.04 - 12.07	160	3199	6	EGX	**T808C**	**T071B**		original / alternative
3.2 SRT-6	09.04 - 12.07	246	3199	6	EGZ	**T808C**	**T071B**		original / alternative
Le Baron									
3.0 i V6	01.90 - 12.94	105	2972	6	EFA	**T813B**			
3.0 i V6 Cabriolet	01.90 - 12.96	105	2972	6	6G72	**T813B**			
Neon (PL)									
1.8 16V	09.97 - 08.99	85	1796	4	EBD	**T107B**	**T110B**		boot design
2.0 16V	05.94 - 08.99	98	1996	4	420H	**T107B**			
2.0 16V	06.94 - 08.99	107	1996	4	ECC	**T111B**			
2.0 16V	04.96 - 08.99	109	1996	4	420T	**T111B**			
Neon II									
1.6	11.01 - 12.06	85	1598	4	EJD	**T116B**			
1.8	01.00 -	91	1796	4	EBD	**T107B**			
2.0 16V	08.99 - 12.06	98	1996	4	420H	**T116B**			
2.0 16V R/T	10.01 - 12.06	110	1996	4	ECH	**T107B**			
New Yorker									
3.5 i 24V	04.93 - 09.98	155	3518	6	F01	**T139B**			
PT Cruiser (PT_)									
1.6	11.01 - 12.10	85	1598	4	EJD	**T116B**			
2.0	06.00 - 12.10	104	1996	4	ECC	**T112B**			
2.0	10.04 - 12.10	100	1996	4	ECC	**T112B**			
2.4	06.00 - 12.10	110	2429	4	EDZ	**T112B**			
2.4	08.05 - 12.10	105	2429	4	EDZ	**T112B**			
PT Cruiser Cabriolet									
2.4	03.04 - 03.08	105	2429	4	EDZ	**T112B**			
Saratoga									
3.0	09.89 - 12.95	105	2972	6	6G72	**T813B**			
Sebring (JR)									
2.0	04.01 - 06.07	104	1996	4	ECC	**T107B**	**T110B**		boot design
2.4	04.01 - 06.07	112	2429	4	EDZ	**T112B**			
Sebring Cabriolet (JR)									
2.0	04.01 - 06.07	104	1996	4	ECC	**T112B**			
2.4	04.01 - 06.07	112	2429	4	EDZ	**T112B**			
Stratus (JA)									
2.0 16V	12.95 -	98	1996	4	ECB	**T107B**	**T110B**		boot design
2.0 LE	12.95 - 04.01	96	1996	4	C00	**T107B**	**T110B**		boot design
2.4 16V	12.95 - 04.01	103	2429	4	EDZ	**T111B**			

CHRYSLER Stratus (JA) ▶

model	year	kW	cm³	cyl	engine	I	II	III	info
Stratus (JA)									
2.4 16V	12.95 -	112	2429	4	EDZ	**T111B**			
2.5 LX V6	12.95 - 04.01	120	2497	6	EEB/H00	**T478B**			
2.5 V6	12.95 -	125	2497	6	H00	**T478B**			
Stratus Cabriolet (JX)									
2.0 LE	06.96 - 04.01	96	1996	4	420X	**T107B**	**T110B**		boot design
2.5 LX	04.96 - 04.01	120	2499	6	625H	**T478B**			
Vision									
3.5 TSi	09.93 - 12.97	155	3518	6	F00/F01	**T192B**			
Voyager II (ES)									
3.0 i	01.91 - 09.95	108	2972	6	300/6G72	**T813B**			
3.3 i	08.90 - 09.95	110	3301	6	EGA	**T139B**			
3.3 i	08.90 - 09.95	120	3301	6	EGA	**T139B**			
3.3 i AWD	08.90 - 09.95	110	3301	6	EGA	**T139B**			
3.3 i AWD	08.90 - 09.95	120	3301	6	R00	**T139B**			
Voyager III (GS)									
2.0 i	01.95 - 03.01	98	1995	4	C00	**T107B**	**T110B**		without distributor / boot design
	01.95 - 03.01	98	1995	4	C00	**T814B**			with distributor
2.4 i	01.95 - 03.01	111	2429	4	B00	**T111B**			without distributor
	01.95 - 12.96	111	2429	4	B00	**T814B**			with distributor
2.4 AWD	02.97 - 03.01	111	2429	4	EDZ	**T111B**			
3.0	01.95 - 03.01	112	2972	6	EFA	**T813B**			
3.3 i	01.95 - 03.01	116	3301	6	R00	**T139B**			
3.8 i AWD	01.95 - 03.01	122	3778	6	L00	**T139B**			
3.8 i AWD	01.95 - 03.01	131	3778	6	EGH	**T139B**			
Voyager IV (RG , RS)									
2.4	02.00 - 12.08	108	2429	4	EDZ	**T112B**			
3.3	02.00 - 12.08	128	3301	6	EGA	**T477B**			
3.3 AWD	02.00 - 12.08	128	3301	6	EGA	**T477B**			
3.3 Flex Fuel	02.00 - 12.08	128	3301	6	EGM	**T477B**			
3.8	02.00 - 12.08	160	3778	6	EGH	**T477B**			
3.8 AWD	02.00 - 12.08	160	3778	6	EGH	**T477B**			
CITROEN									
AX (ZA-_)									
10	09.86 - 06.92	32	954	4	C1A	**T728B**			
10	07.86 - 12.91	33	954	4	CDY (TU9M)	**T728B**			SAE
	01.92 - 12.98	33	954	4	CDY (TU9M)	**T815B**			PIN
10	02.87 - 12.98	37	954	4	CDZ (TU9M)	**T815B**			
10 E	12.86 - 12.88	30	954	4	C3A	**T728B**			
11	12.86 - 04.94	40	1124	4	H1A/H1B	**T728B**			
11	09.86 - 04.92	44	1124	4	HDZ (TU1M)	**T728B**			SAE
	05.92 - 12.97	44	1124	4	HDZ (TU1M)	**T815B**			PIN
11 4x4	06.91 - 07.92	40	1124	4	H1A	**T728B**			
11 cat	09.88 - 12.89	40	1124	4	HAZ (TU1CP)	**T728B**			
14	12.86 - 12.88	44	1360	4	KAY (TU3CP)	**T728B**			
14	06.88 - 12.89	49	1360	4	K1F	**T728B**			
14	04.87 - 01.93	55	1360	4	KDY (TU3FM)/KDY (TU3M)	**T728B**			SAE
	01.93 - 04.97	55	1360	4	KDX (TU3M/Z)/KDY (TU3M)	**T815B**			PIN
14	01.88 - 12.92	62	1360	4	K2B/K2A	**T728B**			
14 4x4	08.91 - 01.93	55	1360	4	KDY (TU3FM)/KDY (TU3M)	**T728B**			SAE
	01.93 - 12.96	55	1360	4	KDX (TU3M/Z)/KDY (TU3M)	**T815B**			PIN
1.3 Sport	04.87 - 12.88	70	1294	4	M4A	**T728B**			
1.4 4x4	09.86 - 07.92	62	1360	4	K2A	**T728B**			
1.4 GTi	08.91 - 12.96	66	1360	4	KFY (TU3FJ2)	**T815B**			
1.4 GTi	06.91 - 12.96	69	1360	4	KFZ (TU3FJ2)	**T815B**			
1.4 GTi	06.91 - 12.92	74	1360	4	KFZ (TU3FJ2)	**T815B**			
Berlingo (MF)									
1.1 i	07.96 -	44	1124	4	HDZ (TU1M)	**T815B**			
1.4 i	07.96 -	55	1360	4	KFX (TU3JP)/KFW (TU3JP)	**T815B**			
1.8 i	05.97 -	66	1761	4	LFX (XU7JB)	**T497B**			
1.8 i 4WD	04.97 -	66	1761	4	LFX (XU7JB)	**T497B**			
Berlingo Van (M_)									
1.1 i	07.96 -	44	1124	4	HDZ (TU1M)/HFX (TU1JP)	**T815B**			
1.4 i	07.96 -	55	1360	4	KFX (TU3JP)/KFW (TU3JP)	**T815B**			
1.8 i	08.99 - 10.02	66	1761	4	LFX (XU7JB)	**T497B**			
BX (XB-_)									
11	10.86 - 06.92	42	1124	4	H1A	**T728B**			
14	01.89 - 02.93	55	1360	4	KDZ (TU3M/Z)/KDY (TU3M)	**T728B**			
14 E	10.82 - 06.88	45	1360	4	150A	**T721B**			
14 E	09.85 - 02.93	49	1360	4	150F	**T721B**			

CITROEN BX (XB-_)

model	year	kW	cm³	cyl	engine	I	II	III	info
BX (XB-_)									
14 E	04.83 - 07.89	52	1360	4	150C/K1G	**T721B**			
14 E	04.83 - 02.93	53	1360	4	150C	**T721B**			
15	10.87 - 05.92	59	1580	4	B1E (XU51C)	**T435B**			DIN
	10.87 - 05.92	59	1580	4	B1E (XU51C)	**T496B**			SAE
16	01.87 - 02.93	53	1580	4	B1E (XU51C)	**T435B**			DIN
	01.87 - 02.93	53	1580	4	B1E (XU51C)	**T496B**			SAE
16	07.85 - 02.93	64	1580	4	171D	**T435B**			DIN
	07.85 - 02.93	64	1580	4	171D	**T496B**			SAE
16	10.82 - 06.88	66	1580	4	171B/171A/171C	**T435B**			
16	03.86 - 02.93	76	1580	4	180Z	**T435B**			DIN
	03.86 - 02.93	76	1580	4	180Z	**T905B**			SAE
16	09.89 - 02.93	55	1580	4	BAZ (XU5CP)/BAY (XU5CP)	**T496B**			
16 E	05.89 - 03.91	65	1580	4	BDY (XU5M)/BDZ (XU5M)	**T496B**			SAE
	03.91 - 02.93	65	1580	4	BDY (XU5M)/BDZ (XU5M)	**T497B**			PIN
19	09.86 - 11.89	70	1905	4	D2C (XU92C)	**T435B**			DIN
	09.86 - 11.89	70	1905	4	D2C (XU92C)	**T496B**			SAE
19	07.86 - 05.89	75	1905	4	159A	**T435B**			DIN
	07.86 - 05.89	75	1905	4	159A	**T496B**			SAE
19	07.86 - 05.89	77	1905	4	D2A (XU92C)	**T435B**			
19 E	06.88 - 02.93	80	1905	4	DDZ (XU9M)	**T215B**			
19 E 4x4	04.89 - 02.93	80	1905	4	D2F	**T496B**			
19 GTi	06.88 - 02.93	88	1905	4	DKZ (XU9JA)	**T435B**			DIN
	06.88 - 02.93	88	1905	4	DKZ (XU9JA)	**T496B**			SAE
19 GTi	07.86 - 02.93	90	1905	4	D6A (XU9J2)	**T215B**			
19 GTi 16V	03.88 - 02.93	108	1905	4	DFW (XU9J4)	**T598B**			
19 GTi 16V	09.87 - 12.88	116	1905	4	D6C (XU9J4)	**T598B**			
19 GTi 4x4	06.88 - 02.93	88	1905	4	DKZ (XU9JA)	**T435B**			DIN
	06.88 - 02.93	88	1905	4	DKZ (XU9JA)	**T496B**			SAE
BX Break (XB-_)									
14	01.86 - 02.93	53	1360	4	150C	**T728B**			
14	01.89 - 02.93	55	1360	4	KDY (TU3M)	**T728B**			
15	10.87 - 03.88	59	1580	4	B1E (XU51C)	**T435B**			DIN
	04.88 - 05.92	59	1580	4	B1E (XU51C)	**T496B**			SAE
16	09.88 - 12.94	53	1580	4	B1E (XU51C)	**T435B**			DIN
	09.88 - 12.94	53	1580	4	B1E (XU51C)	**T496B**			SAE
16	07.85 - 12.94	64	1580	4	171D	**T435B**			DIN
	07.85 - 12.94	64	1580	4	171D	**T496B**			SAE
16	05.89 - 03.91	65	1580	4	BDY (XU5M)/BDZ (XU5M)	**T496B**			SAE
	03.91 - 12.94	65	1580	4	BDY (XU5M)/BDZ (XU5M)	**T497B**			PIN
16	06.85 - 06.88	66	1580	4	171B/171A/171C	**T435B**			
16	03.86 - 12.94	76	1580	4	180Z	**T435B**			
	03.86 - 12.94	76	1580	4	180Z	**T905B**			
19	06.88 - 12.94	88	1905	4	DKZ (XU9JA)	**T435B**			DIN
	06.88 - 12.94	88	1905	4	DKZ (XU9JA)	**T496B**			SAE
19	06.88 - 04.90	80	1905	4	DDZ (XU9M)	**T215B**			SAE
	04.90 - 12.94	80	1905	4	DDZ (XU9M)	**T498B**			PIN
19	12.87 - 12.89	70	1905	4	D2C (XU92C)	**T435B**			DIN
	12.87 - 12.89	70	1905	4	D2C (XU92C)	**T496B**			SAE
1.4	01.87 - 01.92	52	1360	4	150C	**T721B**			
1.6	01.87 - 01.92	85	1580	4	B6E/B6D	**T905B**			
C15 (VD-_)									
1.0	10.84 - 12.97	33	954	4	XV8/TU9	**T728B**			SAE
	10.84 - 12.97	33	954	4	XV8/TU9	**T827B**			DIN
1.0 E	11.92 - 07.96	37	954	4	TU9K	**T728B**			
1.1	10.84 - 12.96	35	1124	4	109K/E1A	**T721B**	**T728B**		DIN
	10.84 - 12.96	35	1124	4	109K/E1A	**T728B**			SAE
1.1	11.88 - 07.96	40	1124	4	H1A	**T728B**			
1.1	10.84 - 07.87	40	1118	4		**T728B**			
1.1 i	07.88 - 12.96	44	1124	4	HDZ (TU1M)	**T728B**			
1.4	07.87 - 12.96	49	1360	4	K1H (TU3A)	**T728B**			SAE
	07.87 - 12.96	49	1360	4	K1H (TU3A)	**T827B**			DIN
1.4 E	05.87 - 12.96	44	1360	4	150D (XY7)	**T728B**			
1.4 E	07.87 - 12.96	40	1360	4	K3A	**T728B**			
1.4 i	05.91 - 12.96	55	1360	4	KDY (TU3FM)/KDY (TU3M)	**T728B**			
C15 Combi									
1.1	08.88 - 07.96	44	1124	4	HDZ (TU1M)	**T728B**			
1.4	05.91 - 07.96	55	1360	4	KDY (TU3M)	**T728B**			
C25 Bus (280_, 290_)									
1.8 E	07.87 - 02.94	51	1796	4	169 (XM7T)	**T724B**			

CITROEN Evasion (22, U6)

model	year	kW	cm³	cyl	engine	I	II	III	info
Evasion (22, U6)									
1.8	05.97 - 07.02	73	1761	4	LFZ (XU7JP)	**T497B**			
2.0	06.94 - 07.02	89	1998	4	RFU (XU10J2/C)	**T498B**			
2.0 Turbo C.T.	06.94 - 07.02	108	1998	4	RGX (XU10J2TE)	**T498B**			
Jumper Bus (230P)									
2.0	02.94 - 04.02	80	1998	4	RFW (XU10J2U)	**T497B**			
2.0 4x4	08.96 - 04.02	80	1998	4	RFW (XU10J2U)	**T497B**			
Jumper Flatbed (230)									
2.0	03.94 - 04.02	80	1998	4	RFW (XU10J2U)	**T497B**			
Jumper Van (230L)									
2.0	03.94 - 04.02	80	1998	4	RFW (XU10J2U)	**T497B**			
2.0 4x4	10.96 - 01.02	80	1998	4	RFW (XU10J2U)	**T497B**			
Jumper Bus (244, Z_)									
2.0	04.02 -	81	1998	4	XU10J2	**T497B**			
2.0 Bivalent	02.03 -	81	1998	4	XU10J2	**T497B**			
Jumper Van (244)									
2.0	04.02 -	81	1998	4	XU10J2	**T497B**			
2.0 Bivalent	02.03 -	81	1998	4	XU10J2	**T497B**			
Jumpy (U6U), Jumpy Van (B _ _)									
1.6	10.95 -	58	1581	4	220 A2.000/1580 SPI	**T552C**	**T013B**		original / alternative
Saxo (S0, S1)									
1.0 X	05.96 - 11.98	33	954	4	CDZ (TU9M)	**T815B**			
1.0 X	05.98 - 06.03	37	954	4	CDZ (TU9M)	**T815B**			
1.1 X,SX	05.96 - 09.03	40	1124	4	HDZ (TU1M)	**T815B**			
1.1 X,SX	05.96 - 08.00	44	1124	4	HDZ (TU1M)	**T815B**			
1.4 VTS	05.96 - 01.98	55	1360	4	KFX (TU3JP)/KFW (TU3JP)	**T815B**			
1.6	02.96 - 06.03	66	1587	4	NFZ (TU5JP)	**T815B**			
1.6	02.01 - 04.04	74	1587	4	NFT	**T815B**			
1.6	02.96 - 04.04	88	1587	4	NFX (TU5JP4)	**T815B**			
1.6 VTL,VTR	05.96 - 06.03	65	1587	4	NFZ (TU5JP)	**T815B**			
1.6 VTS	06.96 - 09.03	87	1587	4	NFX (TU5JP4)	**T815B**			
1.6 VTS	09.00 - 09.03	72	1587	4	NFT	**T815B**			
Visa									
1.0	09.84 - 06.88	33	954	4	XV8	**T721B**			
11 E	09.78 - 06.88	35	1124	4	109K	**T721B**			
11 E	07.82 - 03.91	37	1124	4	109/5F	**T721B**			
11 E	09.78 - 03.91	42	1124	4	109/5	**T721B**			
14	07.84 - 03.91	44	1360	4	150D (XY7)	**T721B**			
14 GT	03.82 - 03.91	58	1360	4	150B (XY8)	**T721B**			
14 GT	03.82 - 03.87	55	1360	4	150B (XY8)	**T721B**			
16 GTI	01.85 - 06.86	76	1580	4	180A (XU5J)	**T218B**			
16 GTI	06.86 - 03.91	83	1580	4	B6D	**T218B**			
Xantia (X1)									
1.6 i	03.93 - 01.98	65	1580	4	BFZ (XU5JP)	**T497B**			
1.8 i	03.93 - 01.98	74	1761	4	LFZ (XU7JP)	**T497B**			
1.8 i	04.97 - 01.98	66	1761	4	LFX (XU7JB)	**T497B**			
1.8 i 16V	06.95 - 01.98	81	1761	4	LFY (XU7JP4)	**T497B**			
2.0 i	03.93 - 01.98	89	1998	4	RFX (XU10J2C)	**T498B**			
2.0 i 16V	03.93 - 01.98	112	1998	4	RFY (XU10J4/Z)	**T498B**			
2.0 i 16V	06.94 - 01.98	110	1998	4	RFT (XU10J4/Z)	**T498B**			
2.0 i 16V	06.95 - 01.98	97	1998	4	RFV (XU10J4R)	**T498B**			
2.0 Turbo	06.95 - 01.98	108	1998	4	RGX (XU10J2TE)	**T498B**			
Xantia (X2)									
1.8 i	01.98 - 04.03	66	1761	4	LFX (XU7JB)	**T497B**			
2.0 i	01.98 - 04.03	89	1998	4	RFX (XU10J2C)	**T498B**			
2.0 Turbo	01.98 - 04.03	108	1998	4	RGX (XU10J2TE)	**T498B**			
Xantia Break (X1)									
1.8 i	06.95 - 01.98	74	1761	4	LFZ (XU7JP)	**T497B**			
1.8 i	04.97 - 01.98	66	1761	4	LFX (XU7JB)	**T497B**			
1.8 i 16V	06.95 - 01.98	81	1761	4	LFY (XU7JP4)	**T497B**			
2.0 i	06.95 - 01.98	89	1998	4	RFX (XU10J2C)	**T498B**			
2.0 i 16V	06.95 - 01.98	97	1998	4	RFV (XU10J4R)	**T498B**			
2.0 Turbo	06.95 - 01.98	108	1998	4	RGX (XU10J2TE)	**T498B**			
Xantia Break (X2)									
1.8 i	01.98 - 04.03	66	1761	4	LFX (XU7JB)	**T497B**			
2.0 i	01.98 - 04.03	89	1998	4	RFX (XU10J2C)	**T498B**			
2.0 Turbo	01.98 - 04.03	108	1998	4	RGX (XU10J2TE)	**T498B**			
XM (Y3)									
2.0	05.89 - 04.94	84	1998	4		**T959B**			
2.0 i	05.89 - 06.94	89	1998	4	RFZ (XU10J2)	**T498B**			
2.0 i	05.89 - 04.94	79	1998	4	RDZ (XU10MZ)	**T959B**			

CITROEN XM (Y3) ▶

model	year	kW	cm³	cyl	engine	I	II	III	info
XM (Y3)									
2.0 i Turbo	09.92 - 06.94	104	1998	4	RGY (XU10J2TE/Z)	**T498B**			
3.0	05.89 - 05.94	123	2975	6		**T817B**			
3.0 V6	05.89 - 06.94	123	2963	6	UFZ (ZPJ/Z)/SFZ (ZPJ/Z)	**T817B**			
3.0 V6 24V	07.90 - 06.94	147	2963	6	UKZ (ZPJ4/Z)/SKZ (ZPJ4/Z)	**T216B**			
XM (Y4)									
2.0 i 16V	05.94 - 10.00	97	1998	4	RFV (XU10J4R)	**T498B**			
2.0 Turbo	05.94 - 10.00	108	1998	4	RGX (XU10J2TE)	**T498B**			
3.0 V6	05.94 - 10.00	123	2963	6	UFZ (ZPJ/Z)/SFZ (ZPJ/Z)	**T817B**			
3.0 V6 24V	05.94 - 10.00	147	2963	6	UKZ (ZPJ4/Z)/SKZ (ZPJ4/Z)	**T216B**			
XM Break (Y3)									
2.0	10.91 - 07.94	85	1998	4		**T959B**			
2.0 i	11.91 - 04.94	89	1998	4	RFZ (XU10J2)	**T498B**			
2.0 i	11.91 - 04.94	79	1998	4	RDZ (XU10MZ)/XU102C	**T959B**			
2.0 Turbo	09.92 - 04.94	104	1998	4	RGY (XU10J2TE/Z)	**T498B**			
3.0	05.89 - 07.94	123	2975	6		**T817B**			
3.0 V6	11.91 - 04.94	123	2963	6	UFZ (ZPJ/Z)/SFZ (ZPJ/Z)	**T817B**			
XM Break (Y4)									
2.0 i 16V	05.94 - 10.00	97	1998	4	RFV (XU10J4R)	**T498B**			
2.0 Turbo	05.94 - 10.00	108	1998	4	RGX / RGY	**T498B**			
3.0 V6	05.94 - 10.00	123	2963	6	UFZ (ZPJ/Z)/SFZ (ZPJ/Z)	**T817B**			
Xsara (N1)									
1.4 i	04.97 - 03.05	55	1360	4	KFX (TU3JP)	**T815B**			
1.6 i	04.97 - 09.00	65	1587	4	NFZ (TU5JP)	**T815B**			
1.8 i	04.97 - 09.00	66	1761	4	LFX (XU7JB)	**T497B**			
1.8 i 16V	04.97 - 09.00	81	1761	4	LFY (XU7JP4)	**T497B**			
1.8 i Aut.	04.97 - 09.00	74	1761	4	LFZ (XU7JP)	**T497B**			
2.0 16V	07.98 - 09.00	97	1998	4	RFV (XU10J4R)	**T498B**			
Xsara Break (N2)									
1.4 i	10.97 - 08.05	55	1360	4	KFX (TU3JP)	**T815B**			
1.6 i	10.97 - 09.00	65	1587	4	NFZ (TU5JP)	**T815B**			
1.8 i	10.97 - 09.00	66	1761	4	LFX (XU7JB)	**T497B**			
1.8 i 16V	10.97 - 09.00	81	1761	4	LFY (XU7JP4)	**T497B**			
1.8 i Aut.	10.97 - 09.00	74	1761	4	LFZ (XU7JP)	**T497B**			
2.0 16V	07.98 - 09.00	97	1998	4	RFV (XU10J4R)	**T498B**			
Xsara Coupe (N0)									
1.4 i	03.98 - 03.05	55	1360	4	KFX (TU3JP)	**T815B**			
1.6 i	02.98 - 09.00	65	1587	4	NFZ (TU5JP)	**T815B**			
1.8 i	02.98 - 09.00	66	1761	4	LFX (XU7JB)	**T497B**			
1.8 i	02.98 - 09.00	74	1761	4	LFZ (XU7JP)	**T497B**			
1.8 i 16V	02.98 - 09.00	81	1761	4	LFY (XU7JP4)	**T497B**			
Xsara Picasso (N68)									
1.6	12.99 -	65	1587	4	NFZ (TU5JP)	**T815B**			
ZX (N2)									
1.1	03.91 - 08.93	40	1124	4	H1A/H1B	**T728B**			
1.1	03.91 - 06.97	44	1124	4	HDZ (TU1M)	**T728B**			
1.4	03.91 - 06.97	55	1360	4	KDZ (TU3M/Z)	**T728B**			SAE
	03.91 - 06.97	55	1360	4	KDZ (TU3M/Z)	**T815B**			PIN
1.4 i	03.91 - 06.97	55	1360	4	KDZ / KFX / KDX	**T728B**			SAE
	03.91 - 06.97	55	1360	4	KDZ / KFX / KDX	**T815B**			PIN
1.6	07.94 - 10.97	66	1580	4		**T497B**			
1.6 i	03.91 - 06.97	65	1580	4	BFZ (XU5JP)/BDY (XU5M)	**T497B**			
1.8	07.94 - 10.97	76	1761	4		**T497B**			
1.8 i	07.92 - 06.97	74	1761	4	LFZ (XU7JP)	**T497B**			
1.8 i 16V	01.96 - 06.97	81	1761	4	LFY (XU7JP4)	**T497B**			
1.9	03.91 - 09.93	96	1905	4		**T497B**			
1.9	03.91 - 06.97	93	1905	4	D6E (XU9JA)	**T497B**			
1.9 i	03.91 - 06.97	88	1905	4	DKZ (XU9JA)	**T497B**			PIN
	03.91 - 06.97	88	1905	4	DKZ (XU9JA)	**T905B**			SAE
2.0	07.94 - 10.97	90	1998	4	RFX (XU10J2C)	**T498B**			
2.0 i	07.92 - 06.97	89	1998	4	RFX (XU10J2C)	**T498B**			
2.0 i 16V	07.92 - 10.94	112	1998	4	RFT / RFY	**T498B**			
2.0 i 16V	06.94 - 06.97	110	1998	4	RFT (XU10J4/Z)	**T498B**			
ZX Break (N2)									
1.4 i	10.93 - 10.97	55	1360	4	KFX / KDX / KDY (TU3M)	**T728B**			SAE
	10.93 - 10.97	55	1360	4	KFX / KDX / KDY (TU3M)	**T815B**			PIN
1.6 i	10.93 - 10.97	65	1580	4	BFZ (XU5JP)/BDY (XU5M)	**T497B**			
1.8 i	10.93 - 10.97	74	1761	4	LFZ (XU7JP)	**T497B**			
1.8 i 16V	01.96 - 02.98	81	1761	4	LFY (XU7JP4)	**T497B**			

model	year	kW	cm³	cyl	engine	I	II	III	info
DACIA									
1300									
1.3	12.72 - 05.83	40	1289	4	810-02/-99	**T625S**			
1.3 Combi	12.72 - 05.83	40	1289	4	810-02/-99	**T625S**			
1.3 Combi	05.83 - 07.04	40	1289	4	810-02/-99	**T625S**			
1.3 Sedan	05.83 - 07.04	40	1289	4	810-02/-99	**T625S**			
Dokker									
1.6	11.12 -	61	1598	4	K7M 812/K7M 828	**T930B**	**T910H**		
1.6 LPG	11.13 -	61	1598	4	K7M 812/K7M 828	**T930B**	**T910H**		
Dokker Express									
1.6 16V	12.12 -	61	1598	4	K7M 812/K7M 828	**T930B**	**T910H**		
1.6 LPG	11.13 -	61	1598	4	K7M 812/K7M 828	**T930B**	**T910H**		
Lodgy									
1.6	03.12 -	61	1598	4	K7M 812/K7M 828	**T930B**	**T910H**		
1.6 LPG	11.13 -	61	1598	4	K7M 812/K7M 828	**T930B**	**T910H**		
Logan (LS_)									
1.2 16V	02.06 -	55	1149	4	D4F 732	**T495B**			
1.4	09.04 -	55	1390	4	K7J 710	**T930B**	**T910H**		
1.4 MPI LPG	02.06 -	55	1390	4	K7J 714/K7J 710	**T930B**	**T910H**		
1.6	09.04 -	64	1598	4	K7M 710	**T930B**	**T910H**		
1.6 Bifuel	05.10 -	62	1598	4	K7M 800	**T930B**	**T910H**		
1.6 MPI 85	05.10 -	62	1598	4	K7M 800	**T930B**	**T910H**		
Logan II									
1.2	10.12 -	55	1149	4	D4F 732	**T495B**			
1.2 LPG	10.12 -	55	1149	4	D4F 734	**T495B**			
Logan Express (FS_)									
1.4	03.09 -	55	1390	4	K7J 710	**T930B**	**T910H**		
1.6	03.09 -	64	1598	4	K7M 710	**T930B**	**T910H**		
1.6 Bifuel	05.10 -	62	1598	4	K7M 800	**T930B**	**T910H**		
1.6 MPI 85	05.10 -	62	1598	4	K7M 800	**T930B**	**T910H**		
Logan MCV (KS_)									
1.4	02.07 -	55	1390	4	K7J 710	**T930B**	**T910H**		
1.6	02.07 -	64	1598	4	K7M 710	**T930B**	**T910H**		
1.6 Bifuel	11.08 -	64	1598	4	K7M 710	**T930B**	**T910H**		
1.6 MPI 85	05.10 -	62	1598	4	K7M 800	**T930B**	**T910H**		
Logan MCV II									
1.2	05.15 -	54	1149	4	D4F 732	**T495B**			
1.2	02.13 -	55	1149	4	D4F 732	**T495B**			
1.2 LPG	02.13 -	55	1149	4	D4F 734	**T495B**			
Logan Pick-up (US_)									
1.4	01.09 -	55	1390	4	K7J 710	**T930B**	**T910H**		
1.6	03.08 -	64	1598	4	K7M 710	**T930B**	**T910H**		
1.6 Bifuel	05.10 -	62	1598	4	K7M 800	**T930B**	**T910H**		
Nova									
1.6	04.96 - 03.03	53	1557	4		**T694S**			
Sandero									
1.2 16V	11.08 -	55	1149	4	D4F 732	**T495B**			
1.2 16V LPG	11.08 -	55	1149	4	D4F 732	**T495B**			
1.4	06.08 -	55	1390	4	K7J 710	**T930B**	**T910H**		
1.4 MPI LPG	01.09 -	53	1390	4	K7J 714	**T930B**	**T910H**		
1.6	06.08 -	64	1598	4	K7M 710	**T930B**	**T910H**		
1.6 MPI 85	05.10 -	62	1598	4	K7M 800	**T930B**	**T910H**		
Sandero II									
1.2	10.12 -	55	1149	4	D4F 732	**T495B**			
1.2 LPG	10.12 -	55	1149	4	D4F 732	**T495B**			
1.6	11.12 -	61	1598	4	K7M 812	**T930B**	**T910H**		
Solenza									
1.4	02.03 -	55	1390	4	K7J 710	**T930B**	**T910H**		
DAEWOO									
Aranos									
1.5	01.95 - 11.97	66	1498	4	V15L	**T710B**			
1.8	01.95 - 11.97	70	1796	4	Y18L	**T737B**	**T698B**		boot design
2.0	01.95 - 11.97	77	1998	4	C20LE	**T737B**	**T698B**		boot design
Cielo (KLETN)									
1.5	04.95 - 07.97	55	1498	4	Y15L	**T147B**			
1.5	02.95 - 08.97	52	1498	4	G15MF	**T736B**	**T440B**		boot design
1.5	02.95 - 08.97	55	1498	4	G15MF	**T736B**	**T440B**		boot design
1.5	08.96 - 08.97	44	1498	4	G15MF	**T736B**	**T440B**		boot design
1.5 16V	02.95 - 08.97	66	1498	4	A15MF	**T710B**			

DAEWOO Cielo Sedan (KLETN) ▶

model	year	kW	cm³	cyl	engine	I	II	III	info
Cielo Sedan (KLETN)									
1.5	02.95 - 08.97	52	1498	4	G15MF	**T736B**	**T440B**		boot design
1.5	02.95 - 08.97	55	1498	4	G15MF	**T736B**	**T440B**		boot design
1.5	08.96 - 08.97	44	1498	4	G15MF	**T736B**	**T440B**		boot design
1.5 16V	02.95 - 08.97	66	1498	4	A15MF	**T710B**			
Damas, Damas II									
0.8	1991 - 2004	28	796	3	F8CB, F8CL, F8A	**T150B**			
0.8	1995 -	28	796	3	F8CL	**T150B**			
Espero (KLEJ)									
1.5	10.97 - 09.99	55	1498	4	G15MF	**T710B**			
1.5 16V	02.95 - 06.99	66	1498	4	A15MF	**T710B**			
1.5 16V	10.93 - 09.94	65	1498	4	A15MF	**T710B**			
1.8	02.95 - 09.99	66	1796	4	C18LE	**T737B**	**T698B**		boot design
1.8	02.95 - 06.99	70	1796	4	C18LE	**T737B**	**T698B**		boot design
2.0	02.95 - 06.99	77	1998	4	C20LE	**T737B**	**T698B**		boot design
2.0	10.91 - 09.93	74	1998	4	C20LZ	**T737B**	**T698B**		boot design
2.0	10.93 - 09.94	81	1998	4	C20LE	**T737B**	**T698B**		boot design
Evanda (KLAL)									
2.0	08.02 -	96	1998	4	L88/X 20 SED	**T777C**	**T986B**		original / alternative
Kalos (KLAS)									
1.2	04.03 -	53	1150	4	B12S1	**T888B**			
1.4	09.02 -	61	1399	4	F14S3	**T738B**	**T699B**		boot design
1.4 16V	04.03 -	69	1399	4	F14D3	**T711B**			
Kalos Sedan (KLAS)									
1.4	11.02 - 12.04	61	1399	4	F14S3	**T738B**	**T699B**		boot design
1.4	05.03 - 12.04	69	1399	4	F14D3	**T711B**			
Korando (KJ)									
2.3	01.99 -	105	2295	4	M 161.970	**T743C**			semidirect
3.2 4x4	01.99 -	156	3199	6	M 104.995	**T623C**			semidirect
Korando Cabrio (KJ)									
2.0 16V	02.99 -	94	1998	4	M 161.950	**T743C**			semidirect
2.3	02.99 -	105	2295	4	M 161.970	**T743C**			semidirect
Lacetti CC (KLAN)									
1.4	02.04 -	70	1399	4	F14D3	**T711B**			
1.6	02.04 -	80	1598	4	F16D3	**T923B**			
1.8	02.04 -	90	1799	4	T18SED	**T777C**	**T986B**		original / alternative
Lacetti Sedan (J200)									
1.8 CDX	08.03 - 12.04	90	1799	4	T18SED	**T777C**	**T986B**		original / alternative
Lanos (KLAT)									
1.3	05.97 -	55	1349	4	A13SMS	**T738B**	**T699B**		
1.5	05.97 -	63	1498	4	A15SMS	**T738B**	**T699B**		
1.6 16V	05.97 -	78	1598	4	A16DMS	**T711B**			
Lanos Sedan (KLAT)									
1.3	05.97 -	55	1349	4	A13SMS	**T738B**	**T699B**		
1.5	05.97 -	63	1498	4	A15SMS	**T738B**	**T699B**		
1.6 16V	05.97 -	78	1598	4	A16DMS	**T711B**			
Leganza (KLAV)									
2.0 16V	06.97 - 12.02	98	1998	4	X 20 SED	**T777C**	**T986B**		original / alternative
2.0 16V	07.00 - 04.04	93	1998	4	T20SED	**T777C**	**T986B**		original / alternative
2.2 16V	04.99 - 12.02	100	2198	4	T22SED	**T777C**	**T986B**		original / alternative
Matiz (KLYA)									
0.8	09.98 - 12.01	38	796	3	F8CV	**T441B**			DIN
	01.02 -	38	796	3	F8CV	**T892B**			SAE
1.0	01.03 -	47	995	4	B10S	**T888B**			
Musso (FJ)									
2.3	01.99 -	103	2295	4	M 111.970	**T743C**			semidirect
3.2 4x4	01.99 -	162	3199	6	M 104.992	**T623C**			semidirect
Nexia (KLETN)									
1.5	08.96 - 08.97	44	1498	4	G15MF	**T736B**	**T440B**		boot design
1.5	02.95 - 08.97	52	1498	4	G15MF	**T736B**	**T440B**		boot design
1.5	04.95 - 07.97	55	1498	4	Y15L	**T147B**			
1.5	02.95 - 08.97	55	1498	4	G15MF	**T736B**	**T440B**		boot design
1.5 16V	02.95 - 08.97	66	1498	4	A15MF	**T710B**			
Nexia Sedan									
1.5	08.96 - 08.97	44	1498	4	G15MF	**T736B**	**T440B**		boot design
1.5	02.95 - 08.97	52	1498	4	G15MF	**T736B**	**T440B**		boot design
1.5	02.95 - 08.97	55	1498	4	G15MF	**T736B**	**T440B**		boot design
1.5	07.08 -	59	1498	4	Y15L	**T738B**	**T699B**		boot design
1.5 16V	02.95 - 08.97	66	1498	4	A15MF	**T710B**			
1.6	07.08 -	80	1598	4	F16D3	**T710B**			

DAEWOO Nexia UZ Daewoo ▶

model	year	kW	cm³	cyl	engine	I	II	III	info
Nexia UZ Daewoo									
1.5	07.97 - 07.08	55	1498	4	SOHC	**T738B**	**T699B**		boot design
1.5 (Nexia New)	03.08 -	59	1498	4	SOHC	**T738B**	**T699B**		boot design
1.6 (Nexia New)	07.08 -	80	1598	4	F16D3 DOHC	**T923B**			Uz Daewoo, UZ
Nubira (KLAJ)									
1.6 16V	05.97 -	78	1598	4	A16DMS	**T711B**			
1.8	04.97 - 05.99	70	1796	4	C18LE	**T737B**	**T698B**		boot design
2.0 16V	05.97 -	98	1998	4	X 20 SED/Z20L	**T777C**	**T986B**		original / alternative
Nubira Sedan (KLAJ)									
1.6 16V	05.97 -	78	1598	4	A16DMS	**T711B**			
1.6 16V	07.00 -	76	1598	4	A16DMS	**T711B**			
1.8	04.97 - 05.99	70	1796	4	C18LE	**T737B**	**T698B**		boot design
2.0	06.99 - 07.03	81	1998	4	C20SED	**T198B**			
2.0 16V	05.97 -	98	1998	4	X 20 SED	**T777C**	**T986B**		original / alternative
2.0 16V	12.00 -	93	1998	4	T20SED	**T777C**	**T986B**		original / alternative
Nubira Sedan (KLAN)									
1.6	07.03 -	80	1598	4	F16D3	**T923B**			
1.8	07.03 -	90	1799	4	T18SED	**T777C**	**T986B**		original / alternative
Nubira Wagon (KLAJ)									
1.6 16V	06.97 -	66	1598	4		**T711B**			
1.6 16V	05.97 -	78	1598	4	A16DMS	**T711B**			
1.6 16V	12.00 -	76	1598	4	A16DMS	**T711B**			
1.8	04.97 - 05.99	70	1796	4	C18LE	**T737B**	**T698B**		boot design
2.0 16V	05.97 -	98	1998	4	X 20 SED	**T777C**	**T986B**		original / alternative
2.0 16V	12.00 -	93	1998	4	T20SED	**T777C**	**T986B**		original / alternative
Nubira Wagon (KLAN)									
1.6	07.03 -	80	1598	4	F16D3	**T923B**			
1.8	07.03 -	90	1799	4	T18SED	**T777C**	**T986B**		original / alternative
Racer									
1.5	86 - 94	55	1498	4	G15	**T147B**			
Rexton (GAB_)									
3.2 V6	04.02 -	162	3199	6	M 162.992	**T623C**			semidirect
Rezzo / Tacuma (KLAU)									
1.6	09.00 -	77	1598	4	A16DMS	**T711B**			
1.8	09.00 -	66	1761	4		**T711B**			
1.8	09.00 -	67	1761	4	F18D2	**T553B**			
1.8	09.00 -	72	1761	4	A18DMS	**T553B**			
1.8	09.00 -	74	1761	4	F18S2	**T553B**			
2.0	09.00 -	94	1998	4	T20SED	**T777C**	**T986B**		original / alternative
2.0	09.01 -	89	1998	4	X 20 SED	**T777C**	**T986B**		original / alternative
Tico (KLY3)									
0.8	02.95 - 12.00	35	796	3	F8C	**T441B**			
0.8	01.96 - 12.00	38	796	3	F8CV	**T441B**			
DAIHATSU									
Applause I (A101, A111)									
1.6 16V	06.89 - 07.97	77	1590	4	HD-E	**T443B**			
1.6 16V	06.89 - 07.97	66	1590	4	HD	**T443B**			
1.6 16V 4WD	06.89 - 07.97	77	1590	4	HD-E	**T443B**			
Applause II (A101)									
1.6 16V	07.97 - 05.00	73	1590	4	HD-E	**T443B**			
Cuore II (L80, L81)									
0.8	11.89 - 12.90	29	847	3	ED 10	**T209P**			5 mm cable
	11.89 - 12.90	29	847	3	ED 10	**T444B**			7 mm cable
0.8	09.85 - 06.90	32	847	3	ED 10	**T209P**			5 mm cable
	09.85 - 06.90	32	847	3	ED 10	**T444B**			7 mm cable
0.8 4WD	09.86 - 10.88	32	847	3	ED 10	**T209P**			5 mm cable
	09.86 - 10.88	32	847	3	ED 10	**T444B**			7 mm cable
Cuore III (L201)									
0.8	10.90 - 12.94	30	847	3	ED10K	**T209P**			
Cuore IV (L501)									
0.8	01.95 - 11.96	32	847	3	ED20	**T209P**			
Feroza Hard Top (F300)									
1.6 16V	10.88 -	63	1590	4	HDC	**T933B**			
1.6 i 16V	10.88 -	70	1590	4	HD-E	**T933B**			
Feroza Soft Top (F300)									
1.6 16V	10.88 -	63	1590	4	HDC	**T933B**			
1.6 i 16V	10.88 -	70	1590	4	HD-E	**T933B**			
Hijet (S85)									
1.0 i Bus	07.94 - 05.98	35	993	3	CB42	**T305B**			
1.0 i Van	07.94 - 05.98	35	993	3	CB42	**T305B**			

DAIHATSU Charade III (G100, G101, G102) ▶

model	year	kW	cm³	cyl	engine	I	II	III	info
Charade III (G100, G101, G102)									
1.0	03.87 - 12.92	38	993	3	CB 23	**T444B**			
1.0	11.90 - 12.92	40	993	3	CB 90	**T444B**			
1.0 GTi	03.87 - 12.92	74	993	3	CB 80 T	**T444B**			
1.3 i	06.88 - 12.92	66	1296	4	HCE	**T443B**			
1.3 i 4WD	06.88 - 01.93	66	1296	4	HCE	**T443B**			
Charade III Sedan (G102)									
1.3	11.90 - 02.93	66	1296	4	HCE	**T443B**			
Charade IV (G200, G202, G203)									
1.3	09.96 - 11.99	44	1296	4	HC	**T443B**			
1.3 16V	05.96 - 11.99	55	1296	4	HCE	**T443B**			
1.3 i 16V	01.93 - 11.99	62	1296	4	HC	**T443B**			
1.5 i 16V	01.97 - 11.99	66	1499	4	HEE/HEEG	**T443B**			
1.5 i 16V Sedan	08.94 -	66	1499	4	HEE	**T443B**			
1.6 GTi	03.93 - 11.99	77	1590	4	HD-E	**T443B**			
Move (L6, L9)									
0.8	10.96 -	31	847	3	ED 20	**T209P**			5 mm cable
	10.96 -	31	847	3	ED 20	**T444B**			7 mm cable
DATSUN									
mi-DO									
1.6 mi-DO	08.14 -	64	1596	4	VAZ 11186	**T395S**	**T684H**	**T514M**	premium / basic / inductive
on-DO									
1.6 on-DO	08.14 -	60	1596	4	VAZ 11186	**T395S**	**T684H**	**T514M**	premium / basic / inductive
1.6 on-DO	08.14 -	64	1596	4	VAZ 11186	**T395S**	**T684H**	**T514M**	premium / basic / inductive
FIAT									
126									
600	09.72 - 06.77	17	594	2	126 A.000	**T336B**			
650	07.81 - 09.00	18	652	2	126 A1.048	**T338B**			
131									
1.3 Mirafiori	10.74 - 09.81	40	1297	4	131 A6.000	**T148B**			
1.3 Mirafiori	10.74 - 12.82	48	1297	4	131 A.000	**T148B**			
500 (312)									
1.2	10.07 -	51	1242	4	169 A4.000	**T631B**			
1.2 LPG	12.10 -	51	1242	4	169 A4.000	**T631B**			
500 C									
1.2	09.09 -	51	1242	4	169 A4.000	**T631B**			
Albea									
1.4	12.07 - 12.11	57	1368	4	178F3.011	**T631B**			
Argenta (132A)									
1600	04.81 - 12.85	72	1585	4	132 D.000	**T456B**			
2000	06.78 - 12.85	83	1995	4	132 D1.000/132 C2.000	**T456B**			
Brava (182)									
1.2 16V 80	12.98 - 10.00	60	1242	4	182 B2.000	**T998B**			
1.2 16V 80	10.00 - 10.01	59	1242	4	188 A5.000	**T998B**			
1.4	10.95 - 10.01	55	1370	4	182 A5.000	**T757C**	**T897B**		original / alternative
1.4 12 V	10.95 - 08.98	59	1370	4	182 A3.000	**T757C**	**T897B**		original / alternative
1.6 16V	10.95 - 10.01	66	1581	4	182 A6.000	**T845B**			
1.6 16V	02.96 - 10.01	76	1581	4	182 A4.000	**T845B**			
Bravo I (182)									
1.2 16V 80	12.98 - 10.00	60	1242	4	182 B2.000	**T998B**			
1.2 16V 80	10.00 - 10.01	59	1242	4	188 A5.000	**T998B**			
1.4	10.95 - 10.01	55	1370	4	182 A5.000	**T757C**	**T897B**		original / alternative
1.4 12 V	10.95 - 10.01	59	1370	4	182 A3.000	**T757C**	**T897B**		original / alternative
1.6 16V	10.95 - 10.01	66	1581	4	182 A6.000	**T845B**			
1.6 16V	03.96 - 10.01	76	1581	4	182 A4.000	**T845B**			
Cinquecento (170)									
0.7	12.91 - 01.96	23	704	2	170 A.000	**T784B**			
0.7 i	07.94 - 01.98	22	704	2	170 A.046	**T784B**			
0.9	07.91 - 12.93	30	903	4	170 A1.000	**T785B**			
0.9 i.e.	07.91 - 12.93	30	903	4	170 A1.046	**T785B**			
0.9 i.e. S	07.91 - 07.99	29	899	4	1170 A1.000/1170 A1.046	**T785B**			
1.1 Sporting	10.94 - 01.98	40	1108	4	176 B2.000	**T722B**			
Coupe (FA/175)									
2.0 16V	11.93 - 08.96	102	1995	4	836 A3.000	**T542B**			
2.0 16V Turbo	11.93 - 08.96	140	1995	4	175 A1.000	**T543B**			
Croma (154)									
1600	12.85 - 12.90	61	1585	4	154 A.048	**T222B**			
2000 16V	08.92 - 08.96	101	1995	4	154 E1.000	**T554B**			
2000 CHT	01.91 - 09.92	74	1995	4		**T222B**			

FIAT Croma (154) ▶

model	year	kW	cm³	cyl	engine	I	II	III	info
Croma (154)									
2000 CHT	12.85 - 02.89	66	1995	4	154 A1.000	**T222B**			
2000 i.e.	03.86 - 09.90	83	1995	4	834 B.048	**T222B**			
2000 i.e.	03.87 - 09.92	88	1995	4	834 B.000/154 C3.000	**T222B**			
2000 i.e.	10.87 - 08.96	85	1995	4	154 C3.046/834 B.146	**T222B**			
2000 i.e.	12.85 - 06.90	114	1995	4	154 A2.000	**T222B**			
2000 i.e. Turbo	11.86 - 11.88	111	1995	4	834 C.146	**T222B**			
2000 i.e. Turbo	06.87 - 08.96	110	1995	4	154 C4.046/834 C.146	**T222B**			
2500 V6	06.93 - 08.96	119	2492	6	834 G.000	**T457C**			
Doblo (119)									
1.2	03.01 -	48	1242	4	223 A5.000	**T178B**			
1.4	10.05 -	57	1368	4	350 A1.000	**T631B**			
1.6 16V	10.01 -	76	1596	4	182 B6.000	**T845B**			
1.6 Natural Power	09.02 -	76	1596	4	182 B6.000	**T845B**			
Doblo Cargo (223)									
1.2	03.01 -	48	1242	4	223 A5.000	**T178B**			
1.4	10.05 -	57	1368	4	350 A1.000	**T631B**			
1.6 16V	10.01 -	76	1596	4	182 B6.000	**T845B**			
1.6 Natural Power	09.02 -	76	1596	4	182 B6.000	**T845B**			
Ducato (280)									
2.0 Flatbed	07.85 - 08.90	55	1971	4	170 B	**T724B**			
1.8 Panorama	07.82 - 12.88	51	1783	4		**T724B**			
2.0 Panorama	01.86 - 08.90	55	1971	4	170 B	**T724B**			
2.0 Panorama	07.82 - 05.85	58	1971	4	XN 1T	**T724B**			
1.8 Van	01.82 - 10.88	49	1783	4	169 B	**T724B**			
2.0 Van	07.85 - 08.90	55	1971	4	170 B	**T724B**			
2.0 Van	01.82 - 08.90	58	1971	4	XN 1T	**T724B**			
Ducato (230)									
2.0 4x4 Bus	11.94 - 11.01	80	1998	4	RFW	**T497B**			
2.0 Panorama	03.94 - 04.02	80	1998	4	RFW	**T497B**			
2.0 Flatbed	06.98 - 04.02	80	1998	4	RFW	**T497B**			
2.0 Van	03.94 - 04.02	80	1998	4	RFW	**T497B**			
Ducato (244)									
2.0 Bus	04.02 -	81	1998	4	RFL	**T497B**			
2.0 Bipower Bus	11.02 -	81	1998	4	RFL	**T497B**			
2.0 Van	04.02 -	81	1998	4	RFL	**T497B**			
2.0 Bipower Van	11.02 -	81	1998	4	RFL	**T497B**			
Duna (146 B)									
60 1.1	01.87 - 12.91	43	1116	4	146 A6.000	**T458B**			
70 1.3	01.87 - 12.91	49	1301	4	146 A5.000	**T458B**			
Duna Weekend (146 B)									
60 1.1	01.87 - 12.91	43	1116	4	146 A6.000	**T458B**			
70 1.3	01.87 - 12.91	49	1301	4	146 A5.000	**T458B**			
Elba (146_)									
1.5	01.92 - 12.96	55	1499	4	149 C1.000	**T221B**			
Fiorino (127)									
0.9	10.77 - 12.84	33	903	4	100 GL.000	**T458B**			
1.0	12.86 - 04.88	41	1049	4	156 A.000	**T458B**			
1.1 60	11.86 - 04.88	40	1116	4	146 A9.000	**T458B**			
1.3	12.87 - 08.93	49	1288	4	146 A5.000	**T458B**			
1.5	01.88 - 08.93	55	1499	4	149 C1.000	**T221B**			
Fiorino Pick up (146)									
1.1	09.87 - 12.88	41	1036	4		**T458B**			
1.3	01.88 - 12.94	49	1301	4	146 A5.000	**T458B**			
1.4	05.94 - 05.01	49	1372	4	146 D5.000	**T552C**	**T013B**		original / alternative
1.6	01.94 - 05.01	55	1581	4	146 D6.000/146 C6.000	**T221B**			
Fiorino Van (146 Uno)									
60 1.1	05.88 - 12.93	40	1116	4	146 A9.000	**T458B**			
70 1.3	01.88 - 12.94	49	1301	4	146 A5.000	**T458B**			
70 i.e. 1.4	05.94 - 10.96	49	1372	4	146 C5.000/146 D5.000	**T221B**			with distributor
	11.96 - 05.01	49	1372	4	146 C5.000/146 D5.000	**T552C**	**T013B**		orig. / alter., without distrib.
75 i.e. 1.5	05.88 - 12.93	55	1499	4	149 C1.000	**T221B**			
75 i.e. 1.6	10.93 - 05.01	55	1581	4	146 D6.000/146 C6.000	**T221B**			with distributor
	10.93 - 05.01	55	1581	4	146 D6.000/146 C6.000	**T552C**	**T013B**		orig. / alter., without distrib.
Fiorino Van/Combi (225)									
1.4 Natural Power	10.09 -	57	1368	4	350 A1.000	**T631B**			
Grande Punto (199)									
1.2	10.05 -	48	1242	4	199 A4.000	**T631B**			
1.2	09.10 -	51	1242	4	169 A4.000	**T631B**			
1.4	06.06 -	55	1368	4	199 A7.000	**T631B**			
1.4	10.05 -	57	1368	4	350 A1.000	**T631B**			

FIAT Idea ▶

model	year	kW	cm³	cyl	engine	I	II	III	info
Idea									
1.4	10.05 -	57	1368	4	350 A1.000	**T631B**			
1.4 LPG	03.09 -	57	1368	4	350 A1.000	**T631B**			
Linea (323)									
1.4	06.07 -	57	1368	4	350 A1.000	**T631B**			
Marea (185)									
1.2 16V	10.98 - 05.02	60	1242	4	182 B2.000	**T998B**			
1.4 12V 80	09.96 - 05.02	59	1370	4	182 A3.000	**T757C**	**T897B**		original / alternative
1.6 16V 100	09.96 - 05.02	76	1581	4	182 A4.000	**T845B**			
1.6 16V 100	04.97 - 02.99	75	1581	4	185 A3.000	**T845B**			
1.6 16V 100 Bipower	04.99 - 05.02	76	1581	4	186 A4.000/185 A3.000	**T845B**			
Marea Weekend (185)									
1.2 16V	10.98 - 05.02	60	1242	4	182 B2.000	**T998B**			
1.4 12V 80	09.96 - 05.02	59	1370	4	182 A3.000	**T757C**	**T897B**		original / alternative
1.6 100 16V	09.96 - 05.02	76	1581	4	182 A4.000	**T845B**			
Multipla (186)									
1.6	09.00 - 06.10	76	1596	4	182 B6.000	**T845B**			
1.6 16V	04.02 - 06.10	70	1596	4	182 B6.000	**T845B**			
1.6 16V 100	04.99 - 06.10	76	1581	4	182 A4.000	**T845B**			
1.6 16V Blupower	04.99 - 06.10	70	1581	4	186 A3.000	**T845B**			
1.6 16V Bipower	04.99 - 06.10	76	1581	4	186 A4.000	**T845B**			
1.6 16V Bipower	10.01 - 06.10	76	1596	4	182 B6.000	**T845B**			
1.6 16V GPL	10.01 - 06.10	76	1596	4	182 B6.000	**T845B**			
Palio (178BX)									
1.0	04.96 -	45	994	4		**T178B**			
1.0	04.96 -	56	994	4		**T178B**			
1.2	07.97 - 08.02	44	1242	4	188 A4.000	**T178B**			
1.2	06.98 -	54	1242	4	178 B5.000/178 E2.000	**T722B**			
1.4	04.96 -	51	1372	4	178 B2.000	**T828B**			
1.4 cat	04.96 -	51	1372	4	178 B2.016	**T828B**			
1.5	06.04 -	62	1461	4	178 E5.022	**T544B**			
1.6 16V	04.96 -	74	1581	4	178 B3.000	**T845B**			
Palio Sport									
1.6 16V	10.01 -	76	1600	4	178E7.000	**T545B**			
Palio Weekend (178DX)									
1.2	04.96 - 02.01	54	1242	4	178 B5.000	**T722B**			
1.2	02.01 -	44	1242	4	178 C4.066/188 A4.000	**T178B**			
1.4	07.97 - 08.01	51	1372	4	178 B2.000	**T828B**			
1.5	02.02 -	62	1461	4	178 E5.022	**T544B**			
1.6 16V	04.96 - 02.01	74	1581	4	178 B3.000	**T845B**			
1.6 16V	02.01 -	76	1596	4	182 B6.000	**T845B**			
Panda (141A_)									
750	01.86 - 01.95	25	770	4	156 A4.000	**T129B**			
750	01.86 - 01.95	25	770	4	141 B.000	**T445B**			
750 cat	01.95 - 12.97	25	770	4	156 A4.048	**T129B**			
800	02.81 - 12.85	25	837	4		**T128B**			
900	10.80 - 06.94	33	903	4	146 A.000/100 GL3.000	**T455B**			
900	04.92 - 12.96	29	899	4	1170 A1.046	**T785B**			
950	09.82 - 08.83	35	965	4	A 112 B1.054	**T128B**			
950 4x4	09.83 - 12.86	35	965	4	A 112 B1.054	**T128B**			
1000	01.86 - 04.92	32	999	4	156 A2.100	**T129B**			
1000	01.85 - 12.92	37	999	4	156 A3.000	**T129B**			
1100	05.91 - 12.99	37	1108	4	156 C.046	**T722B**			without distributor
	05.91 - 12.99	37	1108	4	156 C.046	**T976B**			with distributor
1100	02.95 - 09.03	40	1108	4	187 A1.000/176 B2.000	**T722B**			
1000 4x4	01.86 - 07.89	32	999	4	156 A3.100/156 A2.100	**T129B**			
1000 4x4	01.86 - 12.92	37	999	4	156 A3.000	**T129B**			
1000 4x4	05.86 - 12.94	33	999	4	141 C2.000/156 A2.246	**T977B**			
1000 i.e. cat	10.87 - 08.98	33	999	4	141 C2.000/156 A2.246	**T977B**			
1100 4x4	02.95 - 07.04	40	1108	4	176 B2.000	**T722B**			
1100 Trekking 4x4	10.91 - 07.04	37	1108	4	156 C.046	**T722B**			without distributor
	10.91 - 07.04	37	1108	4	156 C.046	**T976B**			with distributor
Panda (169)									
1.1	09.03 -	40	1108	4	187 A1.000	**T178B**			
1.2	09.03 -	44	1242	4	188 A4.000	**T178B**			
1.2 4x4	10.04 -	44	1242	4	188 A4.000	**T178B**			
1.2 Bi-Power	01.07 -	44	1242	4	188 A4.000	**T178B**			
1.2 LPG	04.09 -	44	1242	4	188 A4.000	**T178B**			
1.2	03.10 -	51	1242	4	169 A4.000	**T631B**			
1.2 4x4	11.09 -	51	1242	4	169 A4.000	**T631B**			
1.2 LPG	11.10 -	51	1242	4	169 A4.000	**T631B**			

FIAT Panda (169) ▶

model	year	kW	cm³	cyl	engine	I	II	III	info
Panda (169)									
1.4 Natural Power	09.10 -	57	1368	4	350 A1.000	**T631B**			
Panda (312)									
1.2	02.12 -	51	1242	4	169 A4.000	**T631B**			
1.2 LPG	06.12 -	51	1242	4	169 A4.000	**T631B**			
Panda Van (141_)									
750	01.86 - 07.92	25	764	4	141 B.000	**T445B**			
1000	01.86 - 02.92	32	999	4	156 A3.100/156 A2.100	**T129B**			
1000 i.e	08.92 - 02.04	33	999	4	156 A2.246	**T977B**			
Panda Van (169)									
1.2	09.04 -	44	1242	4	188 A4.000	**T178B**			
1.2 4x4	09.04 -	44	1242	4	188 A4.000	**T178B**			
1.4 Natural Power	10.09 -	57	1368	4	350 A1.000	**T631B**			
Panda (312)									
1.2	02.12 -	51	1242	4	169 A4.000	**T631B**			
1.2 LPG	06.12 -	51	1242	4	169 A4.000	**T631B**			
Punto (176)									
55 1.1	09.93 - 09.99	40	1108	4	176 A6.000/176 B2.000	**T722B**			
60 1.2	01.94 - 09.99	43	1242	4	176 A7.000	**T722B**			
60 1.2	03.94 - 09.99	44	1242	4	176 B1.000/176 B4.000	**T722B**			
75 1.2	10.93 - 09.99	54	1242	4	176 A8.000	**T722B**			
85 1.2 16V	04.97 - 09.99	63	1242	4	176 B9.000	**T722B**	**T997B**		boot design
1.4 GT Turbo	01.94 - 09.96	98	1372	4	176 A4.000	**T177C**	**T091B**		original / alternative
1.4 GT Turbo	09.96 - 09.99	96	1372	4	176 B6.000	**T177C**	**T091B**		original / alternative
1.6	01.94 - 04.97	65	1581	4	176 A9.000	**T830B**			
Punto (188)									
1.2 60	09.99 -	44	1242	4	188 A4.000	**T178B**			
1.2 Natural Power	09.03 -	44	1242	4	188 A4.000	**T178B**			
1.2 16V 80	09.99 -	59	1242	4	188 A5.000	**T998B**			
Punto (199)									
1.2	03.12 -	51	1242	4	169 A4.000	**T631B**			
1.4	03.12 -	55	1368	4	199 A7.000	**T631B**			
1.4	03.12 -	57	1368	4	350 A1.000	**T631B**			
1.4 BiFuel	03.12 -	57	1368	4	350 A1.000	**T631B**			
1.4 Natural Power	03.12 -	57	1368	4	350 A1.000	**T631B**			
Punto Cabriolet (176C)									
60 1.2	04.94 - 06.00	43	1242	4	176 A7.000	**T722B**			
60 1.2	05.95 - 06.00	44	1242	4	176 B1.000/176 B4.000	**T722B**			
85 1.2 16V	04.97 - 06.00	63	1242	4	176 B9.000	**T722B**	**T997B**		boot design
90 1.6	04.94 - 04.97	65	1581	4	176 A9.000	**T830B**			
Punto EVO (199)									
1.2	10.09 - 02.12	48	1242	4	199 A4.000	**T631B**			
1.2	10.09 - 02.12	51	1242	4	169 A4.000	**T631B**			
1.4	07.09 - 02.12	55	1368	4	199 A7.000	**T631B**			
1.4	10.09 - 02.12	57	1368	4	350 A1.000	**T631B**			
1.4 LPG	06.09 - 02.12	57	1368	4	350 A1.000	**T631B**			
1.4 Natural Power	10.09 - 02.12	57	1368	4	350 A1.000	**T631B**			
Punto Van (176L)									
1.1	04.96 - 02.00	40	1108	4	176 B2.000	**T722B**			
1.2 60	02.00 - 10.09	44	1242	4	188 A4.000	**T178B**			
Qubo (225)									
1.4 Natural Power	10.09 -	57	1368	4	350 A1.000	**T631B**			
Regata (138)									
70 1.3	09.83 - 07.89	48	1301	4	149 A3.000/149 A7.000	**T132B**			
70 1.3	09.83 - 09.85	50	1301	4	138 B2.000	**T132B**			
75 1.5	12.83 - 12.87	55	1498	4	138 C3.048/138 B3.048	**T133B**			
75 i.e. 1.5	07.85 - 07.89	55	1498	4	149 C1.000/138 C2.048	**T133B**			
85 1.6	10.83 - 06.90	60	1585	4	149 A.000	**T829B**			
90 i.e. 1.6	01.87 - 07.89	66	1595	4	149 C2.000	**T829B**			
100 Super 1.6	10.83 - 12.90	74	1585	4	149 A2.000/149 A4.000	**T829B**			
Regata Weekend									
70 1.3	01.84 - 09.85	50	1301	4	138 B2.000	**T132B**			
75 1.5	09.84 - 07.89	55	1498	4	138 C3.048/138 B3.048	**T133B**			
75 1.5 i.e. cat	12.86 - 07.89	55	1498	4	138 C2.048	**T133B**			
90 i.e. 1.6	01.87 - 07.89	66	1595	4	149 C2.000	**T829B**			
Scudo Combinato (220P), Van (220L)									
1.6	02.96 - 12.06	58	1581	4	220 A 2.000	**T552C**	**T013B**		original / alternative
Sedici									
1.6 16V	06.06 -	88	1586	4	M16A	**T994B**			semidirect
1.6 16V	06.06 -	79	1586	4	M16A	**T994B**			semidirect
1.6 16V 4x4	06.06 -	88	1586	4	M16A	**T994B**			semidirect

FIAT Sedici ▶

model	year	kW	cm³	cyl	engine	I	II	III	info
Sedici									
1.6 16V 4x4	06.06 -	79	1586	4	M16A	**T994B**			semidirect
Seicento (187) - Seicento Van (187)									
0.9	01.98 - 01.10	29	899	4	1170 A1.046	**T785B**			
1.1	01.98 - 01.10	40	1108	4	176 B2.000	**T178B**			
Siena (178_)									
1.2	09.98 -	54	1242	4	178 B5.000	**T722B**			
1.4	04.96 -	51	1372	4	178 B2.000	**T828B**			
1.4 cat	04.96 -	51	1372	4	178 B2.016	**T828B**			
1.5	06.04 -	62	1461	4	178 E5.022	**T544B**			
1.6 16V	09.98 -	78	1581	4	178 B3.000	**T845B**			
Strada (178E)									
1.2	06.99 -	54	1242	4	178 B5.000	**T722B**			
1.2	04.03 -	44	1242	4	188 A4.000	**T178B**			
Tempra (159)									
1.4 i.e.	03.91 - 08.96	57	1372	4	159 A2.000	**T829B**			
1.4 i.e.	03.92 - 08.96	51	1372	4	836 A4.000	**T552C**	**T013B**		original / alternative
	03.92 - 08.96	51	1372	4	160 A1.046	**T645B**			
1.6	03.90 - 04.93	63	1581	4	159 A3.000	**T645B**			
1.6 i.e.	06.90 - 07.92	57	1581	4	159 A3.046	**T645B**			
1.6 i.e.	06.92 - 08.96	55	1581	4	835 C1.000	**T552C**	**T013B**		original / alternative
	06.92 - 08.96	55	1581	4	159 A3.048	**T645B**			
1.6 i.e.	06.94 - 08.96	66	1581	4	159 B9.000	**T552C**	**T013B**		original / alternative
1.8 i.e.	03.92 - 08.96	77	1756	4	159 A4.046	**T723B**			
1.8 i.e.	09.93 - 08.96	66	1756	4	835 C4.000	**T551B**			
1.8 i.e.	09.93 - 08.96	76	1756	4	835 C2.000	**T551B**			
1.8 i.e.	10.94 - 08.96	74	1756	4	836 A5.000	**T551B**			
2.0 i.e.	10.90 - 08.96	83	1995	4	159 A6.046	**T723B**			
Tempra S.W. (159)									
1.4 i.e.	03.91 - 08.96	57	1372	4	159 A2.000	**T829B**			
1.4 i.e.	10.92 - 08.96	51	1372	4	836 A4.000	**T552C**	**T013B**		original / alternative
	10.92 - 08.96	51	1372	4	160 A1.046	**T645B**			
1.6	12.90 - 04.93	63	1581	4	159 A3.000	**T645B**			
1.6 i.e.	10.90 - 08.96	57	1581	4	835 C1.000	**T552C**	**T013B**		original / alternative
	10.90 - 08.96	57	1581	4	159 A3.046	**T645B**			
1.6 i.e.	10.92 - 08.96	55	1581	4	835 C1.000	**T552C**	**T013B**		original / alternative
	10.92 - 08.96	55	1581	4	159 A3.048	**T645B**			
1.6 i.e.	06.94 - 08.96	66	1581	4	159 B9.000	**T552C**	**T013B**		original / alternative
1.8 i.e.	03.92 - 12.93	77	1756	4	159 A4.046	**T723B**			
1.8 i.e.	09.93 - 08.96	66	1756	4	835 C4.000	**T551B**			
1.8 i.e.	09.93 - 08.96	76	1756	4	835 C2.000	**T551B**			
1.8 i.e.	10.94 - 08.96	74	1756	4	836 A5.000	**T551B**			
2.0 i.e.	01.91 - 03.95	83	1995	4	159 A6.046	**T723B**			
2.0 i.e. 4x4	03.92 - 03.95	83	1995	4	159 A6.046	**T723B**			
Tipo (160)									
1.1	01.88 - 10.91	41	1108	4	160 A3.000	**T129B**			
1.4 i.e.	05.89 - 04.95	51	1372	4	836 A4.000	**T552C**	**T013B**		original / alternative
1.4 i.e.	05.89 - 04.95	57	1372	4	159 A2.000	**T645B**			
1.6	01.88 - 10.91	61	1581	4	160 A2.000	**T645B**			
1.6 i.e.	07.90 - 01.93	57	1581	4	159 A3.046	**T645B**			
1.6 i.e.	10.92 - 04.95	55	1581	4	835 C1.000	**T552C**	**T013B**		original / alternative
	10.92 - 04.95	55	1581	4	159 A3.048	**T645B**			
1.8 i.e.	09.93 - 04.95	66	1756	4	835 C4.000	**T551B**			
1.8 i.e	03.93 - 04.95	71	1756	4	836 A5.000	**T551B**			
1.8 i.e	10.90 - 06.93	77	1756	4	159 A4.046	**T723B**			
1.8 i.e	04.93 - 04.95	76	1756	4	835 C2.000	**T551B**			
1.8 i.e	10.94 - 04.95	74	1756	4	159 A4.000	**T551B**			
1.8 i.e.16V Sport	11.89 - 06.92	100	1756	4	160 A5.000	**T542B**			
2.0 16V	07.91 - 04.95	107	1995	4	160 A8.046	**T542B**			
2.0 i.e.	06.90 - 03.92	80	1995	4	159 A5.046	**T723B**			
2.0 i.e.	03.90 - 04.95	83	1995	4	159 A6.046	**T723B**			
2.0 i.e. 16V Sport	03.93 - 04.95	102	1995	4	836 A3.000	**T542B**			
Ulysse (220)									
1.8	05.97 - 08.02	73	1761	4	LFW	**T497B**			
2.0	06.94 - 08.02	89	1998	4	RFU (XU10J2C)	**T498B**			
2.0 Turbo	06.94 - 08.02	108	1998	4	RGX (XU10J2CTE)	**T498B**			
Uno (146A/E)									
45 0.9	03.83 - 09.92	33	903	4	146 A.000/146 A.1000	**T455B**			
45 1.0	06.86 - 12.93	32	999	4	156 A2.048/156 A2.100	**T129B**			
45 i.e. 1.0	04.84 - 10.95	33	999	4	156 A2.246	**T129B**			
50 1.1	01.86 - 12.89	37	1116	4	146 A4.044	**T129B**			

FIAT Uno (146A/E) ▶

model	year	kW	cm³	cyl	engine	I	II	III	info
Uno (146A/E)									
50 1.1	01.90 - 12.93	37	1108	4	156 C.046	**T129B**			
50 i.e. 1.1	06.92 - 12.93	36	1116	4	146 C3.000	**T129B**			
55 1.1	01.83 - 08.89	40	1116	4	138 B.000	**T220B**			
60 1.1	04.89 - 12.92	42	1108	4	160 A3.000	**T129B**			
60 1.1	05.85 - 08.89	43	1116	4	146 A4.048	**T220B**			
70 1.3	05.85 - 08.89	48	1302	4	149 A7.000	**T220B**			
70 1.3	01.83 - 04.85	50	1302	4	138 B2.000	**T220B**			
70 i.e. 1.4	09.89 - 12.93	51	1372	4	160 A1.046	**T645B**			
70 i.e. 1.4	09.89 - 12.93	53	1372	4	146 C1.000	**T645B**			
70 S 1.4	09.89 - 10.92	52	1372	4	160 A1.048	**T645B**			
75 i.e. 1.5	10.85 - 12.93	55	1499	4	149 C1.000/138 C2.048	**T829B**			
1.0	11.94 - 08.00	35	994	4	146 A2.166	**T129B**			
1.4 Turbo i.e.	09.89 - 09.93	82	1372	4	146 A8.046	**T446B**			
1.4 Turbo i.e.	12.89 - 12.96	87	1372	4	146 A8.000	**T446B**			
FORD									
B-MAX (JK)									
1.4	10.12 -	66	1388	4	SPJD	**T972G**			
1.4 LPG	08.13 -	63	1388	4	RTJC	**T972G**			
1.4 LPG	08.13 -	66	1388	4	RTJC	**T972G**			
1.6 Ti	10.12 -	77	1596	4	IQJA	**T972G**			
B-MAX Van									
1.4	10.12 -	66	1388	4	SPJD	**T972G**			
1.6 Ti	10.12 -	77	1596	4	IQJA	**T972G**			
Capri II (GECP)									
1.6	02.74 - 12.77	53	1593	4	LCE	**T459G**			
2.3	02.74 - 12.77	79	2294	6	YYE	**T460G**			
3.0	02.74 - 12.77	101	2993	6	HYF	**T460G**			
3.0	02.74 - 12.77	101	2994	6	HYF	**T460G**			
Capri III (GECP)									
1.6	01.78 - 04.87	54	1593	4	LCN	**T459G**			
2.0	01.78 - 12.85	74	1993	4	NEN/OHC TL 20 H	**T459G**			
2.0	01.78 - 12.85	64	1994	4		**T459G**			
2.0	01.78 - 12.82	66	1999	6	NYL	**T460G**			
2.3 Super	06.79 - 12.85	84	2294	6	YYN	**T460G**			
3.0	01.78 - 12.81	101	2994	6	HYF	**T460G**			
C-MAX									
1.6	02.07 - 09.10	74	1596	4	SHDA/_DB/ _DC/HWDB/_DA	**T972G**			
C-MAX II									
1.6 Flexifuel	02.11 -	88	1596	4	MUDA	**T972G**			
1.6 LPG	02.12 -	88	1596	4	MUDA	**T972G**			
1.6 Ti	12.10 -	63	1596	4	XTDA	**T972G**			
1.6 Ti	12.10 -	77	1596	4	IQDB/IQDA	**T972G**			
1.6 Ti	02.12 -	88	1596	4	MUDA	**T972G**			
1.6 Ti	12.10 -	92	1596	4	PNDA	**T972G**			
C-MAX II (DXA/CB7, DXA/CEU)									
1.6 LPG	02.12 -	86	1596	4	MUDA	**T972G**			
Cougar (EC_)									
2.0 16V	08.98 - 12.01	96	1988	4	EDBB/EDBC/EDBD/EDBA	**T726G**			
2.5 ST 200	01.00 - 12.01	151	2495	6	SGA	**T548G**			
2.5 V6 24V	08.98 - 12.01	125	2544	6	LCBA	**T548G**			
2.5 V6 24V	06.00 - 12.01	125	2495	6	LCBC/LCBB/LCBE	**T548G**			
Escort ´86 Express (AVF)									
1.1	05.86 - 07.90	37	1117	4	GSG	**T410G**			
1.3	07.88 - 07.90	46	1297	4	JBA	**T410G**			
1.3	02.86 - 07.90	44	1297	4	JLA/JBB/JLB	**T410G**			DIN FORD
	02.86 - 07.90	44	1297	4	JLA/JBB/JLB	**T474G**			DIN
1.4 i	02.86 - 07.90	54	1392	4	F6D/F6B/FUC	**T140G**			
Escort ´91 Express (AVL)									
1.3	07.90 - 12.94	46	1299	4	JBD	**T410G**			
1.4	07.90 - 12.94	52	1391	4	F6F/F6G	**T744G**			
Escort ´95 Express (AVL)									
1.4	01.95 -	54	1391	4	F4B	**T744G**			
Escort Classic (AAL, ABL)									
1.6 16V	10.98 - 07.00	66	1597	4	L1E	**T227G**			
1.6 16V	02.99 - 07.00	66	1597	4	L1E	**T227G**			
Escort II (ATH)									
1.1	12.74 - 08.80	32	1098	4	G1	**T140G**			
1.1	06.75 - 08.80	34	1098	4	G1	**T140G**			
1.1	12.74 - 08.80	35	1098	4	G2	**T140G**			

FORD Escort II (ATH) ▶

model	year	kW	cm³	cyl	engine	I	II	III	info
Escort II (ATH)									
1.1 Combi	04.75 - 08.80	32	1097	4	G1	**T140G**			
1.1 Combi	04.75 - 08.80	35	1097	4	G2	**T140G**			
Escort III (GAA)									
1.1	08.83 - 12.85	37	1117	4	GSE	**T140G**			
1.1	09.80 - 08.83	40	1117	4	GMA/GLB	**T140G**			
1.1	09.80 - 08.83	43	1117	4	GPA	**T140G**			
1.3	09.80 - 12.85	51	1296	4	JPA	**T140G**			
1.6	09.80 - 12.85	58	1597	4	LP1/LPA	**T140G**			
1.6	09.80 - 10.82	71	1597	4	LUA	**T462G**			
1.6	05.83 - 07.86	48	1555	4	CHT 1600	**T463G**			
Escort III Cabriolet (ALD)									
1.3	09.83 - 12.85	51	1296	4	JPA	**T140G**			
1.6	09.83 - 12.85	58	1597	4	LP1/LPA	**T140G**			
Escort III Combi (AWA)									
1.1	08.83 - 12.85	37	1117	4	GSE	**T140G**			
1.1	09.80 - 08.83	40	1117	4	GMA/GLB	**T140G**			
1.3	03.81 - 12.85	51	1296	4	JPA	**T140G**			
1.6	09.80 - 12.85	58	1597	4	LP1/LPA	**T140G**			
Escort IV (GAF, AWF, ABFT)									
1.1	12.85 - 07.90	37	1117	4	GSG	**T140G**			
1.3	01.86 - 07.90	44	1297	4	JLA/JBB/JLB	**T410G**			
1.3	07.88 - 10.90	46	1297	4	JBA	**T410G**			
1.4	10.85 - 10.90	51	1392	4	FUAA	**T463G**			
1.4	01.86 - 07.90	54	1392	4	F6D/F6B/FUC	**T140G**			
1.4	01.86 - 07.90	55	1392	4	FUA	**T140G**			
1.6	01.86 - 12.88	58	1597	4	LP2	**T463G**			
1.6	04.89 - 07.90	65	1598	4	LUG	**T463G**			
1.6 i	01.86 - 05.90	66	1598	4	L4B	**T463G**			
1.6 i	08.89 - 07.90	75	1597	4	LJB	**T501G**			
1.6 XR3i	01.86 - 08.89	77	1597	4	LRB/LR2	**T140G**			with distributor
	01.86 - 08.89	77	1597	4	LRB/LR2	**T410G**			without distributor
Escort IV Cabriolet (ALF)									
1.4	02.87 - 07.90	54	1392	4	F6D/F6B/FUC	**T140G**			
1.4	01.86 - 07.90	55	1392	4	FUA	**T140G**			
1.6	01.86 - 12.87	58	1597	4	LP2/LPA	**T463G**			
1.6 i	01.86 - 07.90	66	1597	4	L4B	**T463G**			
1.6 i	08.89 - 07.90	75	1597	4	LJB	**T501G**			
1.6 XR3i	01.86 - 07.90	77	1597	4	LRB/LR2	**T140G**			
Escort IV Combi (AWF, AVF)									
1.1	10.85 - 09.90	37	1117	4	GSG	**T140G**			
1.3	01.86 - 07.90	44	1297	4	JLA/JBB/JLB	**T410G**			
1.4	01.86 - 07.90	54	1392	4	F6D/F6B/FUC	**T140G**			
1.4	01.86 - 07.90	55	1392	4	FUA	**T140G**			
1.6	01.86 - 07.90	58	1597	4	LP2	**T463G**			
1.6	04.87 - 08.89	77	1597	4	LRB	**T140G**			
1.6 i	01.86 - 07.90	66	1597	4	L4B	**T463G**			
Escort V (GAL)									
1.3	07.90 - 09.92	44	1299	4	J6A/J4B	**T410G**			
1.4	07.90 - 09.92	52	1392	4	F6F/F6G	**T744G**			
1.6	07.90 - 08.92	66	1598	4	LUJ/LUK	**T501G**	**T744G**		boot design
1.6	07.90 - 12.92	77	1598	4	LJF	**T501G**			
1.8 16V XR3i	02.92 - 12.92	77	1796	4	RDA	**T227G**			
1.8 16V XR3i	02.92 - 12.92	96	1796	4	RQB	**T227G**			
RS 2000	05.91 - 12.92	110	1998	4	N7A	**T471G**			semidirect
Escort V Cabriolet (ALL)									
1.4	07.90 - 12.92	52	1392	4	F6F/F6G	**T744G**			
1.6	07.90 - 12.92	77	1598	4	LJF	**T501G**			
1.8 16V XR3i	02.92 - 12.92	77	1796	4	RDA	**T227G**			
1.8 16V XR3i	02.92 - 12.92	96	1796	4	RQB	**T227G**			
Escort V Combi (GAL, AVL)									
1.3	09.91 - 09.92	44	1299	4	J6A/J4B	**T410G**			
1.4	07.90 - 09.92	52	1392	4	F6F/F6G	**T744G**			
1.6	07.90 - 08.92	66	1598	4	LUJ/LUK	**T501G**	**T744G**		boot design
1.6	07.90 - 09.92	77	1598	4	LJF	**T501G**			
1.8 16V	02.92 - 12.92	77	1796	4	RDA	**T227G**			
Escort VI (GAL)									
1.3	09.92 - 01.95	44	1299	4	J6A/J4B	**T410G**			
1.4	09.92 - 01.95	52	1391	4	F6F/F6G	**T744G**			
1.4	01.94 - 01.95	55	1391	4	F4B/FUH	**T744G**			
1.6 i 16V	09.92 - 01.95	66	1597	4	L1E	**T227G**			

FORD Escort VI (GAL) ▶

model	year	kW	cm³	cyl	engine	I	II	III	info
Escort VI (GAL)									
1.6 i 16V	01.94 - 01.95	65	1597	4	L1H	**T227G**			
1.8 16V XR3i	09.92 - 01.95	96	1796	4	RQB	**T744G**			
1.8 i 16V	09.92 - 01.95	77	1796	4	RDA	**T227G**			
1.8 XR3i 16V 4x4	08.93 - 01.95	77	1796	4	RDA	**T227G**			
1.8 XR3i 16V 4x4	08.93 - 01.95	96	1796	4	RQB	**T227G**			
RS 2000	09.92 - 01.95	110	1998	4	N7A	**T471G**			semidirect
RS 2000 4x4	08.93 - 01.95	110	1998	4	N7A	**T471G**			semidirect
RS Cosworth 4x4	09.92 - 01.95	162	1994	4	N5F	**T471G**			semidirect
Escort VI Cabriolet (ALL)									
1.4	12.92 - 04.94	52	1392	4	F6F/F6G	**T744G**			
1.4 i	07.93 - 01.95	55	1391	4	F4B	**T744G**			
1.6 16V XR3i	12.92 - 01.95	66	1597	4	L1E	**T227G**			
1.6 i 16V	02.94 - 01.95	65	1597	4	L1H	**T227G**			
1.8 16V XR3i	12.92 - 01.95	77	1796	4	RDA	**T227G**			
1.8 16V XR3i	12.92 - 01.95	96	1796	4	RQB	**T227G**			
Escort VI Combi (GAL)									
1.3	09.92 - 01.95	44	1299	4	J6A/J4B	**T410G**			
1.4	01.94 - 01.95	55	1391	4	F4B/FUH	**T744G**			
1.4	09.92 - 01.94	52	1391	4	F6F/F6G	**T744G**			
1.6 i 16V	09.92 - 01.95	66	1597	4	L1E	**T227G**			
1.6 i 16V	01.94 - 01.95	65	1597	4	L1H	**T227G**			
1.8 i 16V	02.93 - 01.95	96	1796	4	RQB	**T227G**			
1.8 i 16V	01.93 - 01.95	77	1796	4	RDA	**T227G**			
Escort VI Sedan (GAL)									
1.3	08.93 - 01.95	44	1299	4	J6A/J4B	**T410G**			
1.4	08.93 - 04.94	52	1392	4	F6F/F6G	**T744G**			
1.4	08.93 - 01.95	55	1391	4	F4B/FUH	**T744G**			
1.6 i 16V	01.94 - 01.95	65	1597	4	L1H	**T227G**			
1.6 i 16V	08.93 - 01.95	66	1597	4	L1E/L1K	**T227G**			
1.8 i 16V	08.93 - 01.95	77	1796	4	RDA	**T227G**			
Escort VII (GAL, AAL, ABL)									
1.3	01.95 - 08.98	44	1299	4	J6A	**T410G**			
	01.95 - 08.98	44	1299	4	J4B	**T164G**			DIN
	09.98 - 10.98	44	1299	4	J4B	**T995G**			PIN
1.4	01.95 - 10.98	55	1391	4	F4B	**T744G**			
1.6 16V	01.95 - 10.98	66	1597	4	L1E	**T227G**			
1.6 16V 4x4	01.95 - 10.98	66	1597	4	L1E	**T227G**			
1.6 i 16V	01.95 - 08.95	65	1597	4	L1H	**T227G**			
1.8 16V	01.95 - 08.95	77	1796	4	RDA	**T227G**			
1.8 16V	01.95 - 10.98	85	1796	4	RKC	**T227G**			
RS 2000	02.95 - 02.98	110	1998	4	N7A	**T471G**			semidirect
RS 2000 4x4	02.95 - 10.98	110	1998	4	N7A	**T471G**			semidirect
RS Cosworth 4x4	02.95 - 10.98	162	1994	4	N5F	**T471G**			semidirect
Escort VII Cabriolet (ALL)									
1.4	02.95 - 08.98	55	1391	4	F4B	**T744G**			
1.6 16V XR3i	02.95 - 12.96	65	1597	4	L1H	**T227G**			
1.6 16V XR3i	02.95 - 09.99	66	1597	4	L1E	**T227G**			
1.8 16V XR3i	02.95 - 08.98	77	1796	4	RDA	**T227G**			
1.8 16V XR3i	10.95 - 08.98	85	1796	4	RKC	**T227G**			
1.8 16V XR3i	02.95 - 08.00	96	1796	4	RQB	**T227G**			
Escort VII Combi (GAL, ANL)									
1.3	01.95 - 08.98	44	1299	4	J6A	**T410G**			
	01.95 - 08.98	44	1299	4	J4B	**T164G**			DIN
	09.98 - 10.98	44	1299	4	J4B	**T995G**			PIN
1.4	01.95 - 02.99	55	1391	4	F4B/FUH	**T744G**			
1.6 16V	01.95 - 02.99	66	1597	4	L1E	**T227G**			
1.6 i 16V	01.95 - 08.95	65	1597	4	L1H	**T227G**			
1.8 16V	01.95 - 08.95	77	1796	4	RDA	**T227G**			
1.8 16V	01.95 - 02.99	85	1796	4	RKC	**T227G**			
Escort VII Sedan (GAL, AFL)									
1.3	01.95 - 08.98	44	1299	4	J6A	**T410G**			
	01.95 - 08.98	44	1299	4	J4B	**T164G**			DIN
	09.98 - 02.99	44	1299	4	J4B	**T995G**			PIN
1.4	01.95 - 02.99	55	1391	4	F4B/FUH	**T744G**			
1.6 i 16V	01.95 - 08.95	65	1597	4	L1H	**T227G**			
1.6 i 16V	01.95 - 02.99	66	1597	4	L1E/L1K	**T227G**			
1.8 16V	01.95 - 08.95	77	1796	4	RDA	**T227G**			
1.8 16V	01.95 - 02.99	85	1796	4	RKC	**T227G**			
Explorer (U2)									
4.0 V6 Allrad	01.93 -	121	3958	6		**T188G**			

FORD Explorer (U2) ▶

model	year	kW	cm³	cyl	engine	I	II	III	info
Explorer (U2)									
4.9 V6 Allrad	01.96 -	157	4942	8		**T183G**			
Fiesta II (FBD)									
1.0	09.83 - 11.89	33	999	4	TLB	**T474G**			
1.0	09.83 - 02.89	33	957	4	TKB	**T474G**			
1.1	05.86 - 02.89	36	1117	4	GSH	**T474G**			
1.1	09.83 - 02.89	37	1117	4	GSF/GLC	**T474G**			
1.3	09.83 - 09.89	51	1297	4	JPC	**T225G**			
1.3	09.83 - 01.87	51	1296	4	JPC	**T225G**			
1.4	10.86 - 02.89	52	1392	4	F6C/F6A	**T462G**			
1.4	02.87 - 02.89	54	1392	4	FUD	**T462G**			
1.4	10.85 - 11.89	55	1392	4	FUB	**T462G**			
Fiesta II (FBD)									
1.6 XR2	03.84 - 02.89	70	1597	4	LUD	**T463G**			
1.6 XR2	04.84 - 02.89	71	1597	4	LUB	**T463G**			
Fiesta III (GFJ)									
1.0	03.89 - 12.95	33	1001	4	TLB	**T410G**			
1.1	03.89 - 12.95	37	1119	4	G6A	**T410G**			
1.1	03.89 - 12.95	40	1119	4	GUD/GUE	**T410G**			
1.3	03.89 - 12.92	44	1299	4	JBC	**T410G**			
1.3	03.89 - 12.95	44	1297	4	JBC, JBB	**T410G**			
1.3 cat	05.91 - 01.97	44	1299	4	J6B	**T410G**			
1.4	03.89 - 12.95	52	1391	4	F6E	**T744G**			
1.4	03.89 - 12.95	54	1391	4	FUG/FUJ	**T744G**			
1.4 cat	03.89 - 12.95	54	1391	4	F4A	**T744G**			
1.6	01.89 - 01.94	65	1597	4	LUH	**T501G**	**T744G**		boot design
1.6 i 16V	01.94 - 12.95	65	1597	4	L1G	**T227G**			
1.6 Turbo	03.90 - 10.92	96	1598	4	LHA	**T501G**			
1.6 XR2i	03.89 - 03.93	76	1598	4	LJD	**T501G**			
1.6 XR2i	03.89 - 01.94	81	1597	4	LJC	**T501G**			
1.8 16V	02.92 - 12.95	77	1796	4	RDB	**T227G**			
1.8 XR2i 16V	02.92 - 12.95	96	1796	4	RQC	**T227G**			
Fiesta IV (JA_, JB_)									
1.0 i	02.97 - 09.98	38	999	4	ZH10JRB	**T164G**			DIN
	09.98 - 09.99	38	999	4	ZH10JRB	**T995G**			PIN
1.25 i 16V	08.95 - 04.98	55	1242	4	DHG/_B/_C/_E/_F/_A/DHD	**T773G**			DIN
	05.98 - 01.02	55	1242	4	DHG/_B/_C/_E/_F/_A/DHD	**T500G**	**T894G**		PIN-boot design
1.3 i	08.95 - 08.98	37	1299	4	JJA/JJE/JJM/JJC/JJJ/JJK	**T164G**			DIN
	09.98 - 01.02	37	1299	4	JJA/JJE/JJM/JJC/JJJ/JJK	**T790G**	**T995G**		PIN-boot design
1.3 i	08.95 - 08.98	44	1299	4	J4R/J4C/J4L/J4J/J4Q/J4T	**T164G**			DIN
	09.98 - 01.02	44	1299	4	J4R/J4C/J4L/J4J/J4Q/J4T	**T790G**	**T995G**		PIN-boot design
1.4 i 16V	04.96 - 04.98	66	1388	4	FHE/FHA	**T227G**			DIN
	05.98 - 01.02	66	1388	4	FHE/FHA	**T726G**	**T894G**		PIN-boot design
1.6 16V Sport	02.00 - 01.02	76	1596	4	L1V/L1T	**T500G**			
Fiesta V (JH_, JD_)									
1.25 16V	03.03 -	51	1242	4	M7JA/M7JB	**T894G**			
1.25 16V	05.02 -	55	1242	4	FUJA/FUJB	**T894G**			
1.3	11.01 -	44	1299	4	BAJA	**T465G**			
1.3	11.01 -	51	1299	4	A9JA/A9JB	**T465G**			
1.4 16V	11.01 -	59	1388	4	FXJB/FXJA	**T972G**			
1.6 16V	11.01 -	74	1596	4	FYJA/FYJB	**T972G**			
2.0 ST 150	03.05 -	110	1999	4	N4JB	**T965G**			
Fiesta VI									
1.25	10.08 -	44	1242	4	STJA/STJB	**T972G**			
1.25	10.08 -	60	1242	4	SNJA/SNJB	**T972G**			
1.4	10.08 -	71	1388	4	SPJA/SPJC	**T972G**			
1.4 LPG	01.09 -	71	1388	4	RTJA/RTJB	**T972G**			
1.6 Ti	09.12 -	77	1596	4	IQJA	**T972G**			
1.6 Ti	10.08 -	88	1596	4	HXJB/HXJA	**T972G**			
1.6 Ti	12.10 -	99	1596	4	U5JA	**T972G**			
Fiesta Van (F3L, F5L)									
1.3	09.91 - 02.96	44	1299	4	J6B	**T744G**			
Fiesta Van (J5_, J3_)									
1.3	02.96 - 08.98	44	1299	4	J4C	**T164G**			DIN
	09.98 -	44	1299	4	J4C	**T995G**			PIN
1.4 i	04.96 - 10.99	66	1388	4	FHA	**T227G**			
Fiesta Van									
1.25	01.09 -	60	1242	4	SNJA/SNJB	**T972G**			
1.3	10.03 -	51	1299	4	A9JA/A9JB	**T465G**			
Focus (DAW, DBW)									
1.4 16V	10.98 - 11.04	55	1388	4	FXDA/FXDD/FXDC/FXDB	**T500G**	**T894G**		boot design

FORD Focus (DAW, DBW) ▶

model	year	kW	cm³	cyl	engine	I	II	III	info
Focus (DAW, DBW)									
1.6 16V	10.98 - 11.04	74	1596	4	FYDH/_DA/FYDB/FYDD/FYDC	**T500G**	**T894G**		boot design
1.8 16V	10.98 - 11.04	85	1796	4	EYDD/EYDC/EYDE/EYDL	**T726G**			
	10.98 - 11.04	85	1796	4	EYDF/EYDG/EYDB/EYDJ/EYDI	**T726G**			
2.0 16V	10.98 - 11.04	96	1988	4	EDDC/EDDB/EDDD/EDDF	**T726G**			
2.0 RS	10.02 - 11.04	158	1988	4	HMDA	**T726G**			
2.0 ST170	03.02 - 11.04	127	1988	4	ALDA	**T726G**			
Focus Combi (DNW)									
1.4 16V	02.99 - 11.04	55	1388	4	FXDA/FXDD/FXDC/FXDB	**T500G**	**T894G**		boot design
1.6 16V	02.99 - 11.04	74	1596	4	FYDH/_DA/FYDB/FYDD/FYDC	**T500G**			
1.8 16V	02.99 - 11.04	85	1796	4	EYDD/EYDC/EYDE/EYDL	**T726G**			
	02.99 - 11.04	85	1796	4	EYDF/EYDG/EYDB/EYDJ/EYDI	**T726G**			
2.0 16V	02.99 - 11.04	96	1988	4	EDDC/EDDB/EDDD/EDDF	**T726G**			
2.0 ST170	08.02 - 11.04	127	1988	4	ALDA	**T726G**			
Focus Sedan (DFW)									
1.4 16V	02.99 - 11.04	55	1388	4	FXDA/FXDD/FXDC/FXDB	**T500G**	**T894G**		boot design
1.6 16V	02.99 - 11.04	74	1596	4	FYDH/_DA/FYDB/FYDD/FYDC	**T500G**			
1.8 16V	02.99 - 11.04	85	1796	4	EYDD/EYDC/EYDE/EYDL	**T726G**			
	02.99 - 11.04	85	1796	4	EYDF/EYDG/EYDB/EYDJ/EYDI	**T726G**			
2.0 16V	02.99 - 11.04	96	1988	4	EDDC/EDDB/EDDD/EDDF	**T726G**			
Focus I									
1.6 Rocam	08.02 - 05	72	1597	4	Zetec Rocam	**T475B**			Ford, RUS
1.8 (USA)	98 - 04		1800	4		**T169G**			
2.0 split port (USA)	98 - 04	82	2000	4	SOHC	**T169G**			
Focus II (DA_)									
1.4	11.04 -	59	1388	4	ASDB/ASDA	**T972G**			
1.6	11.04 -	74	1596	4	SHDA/HWDB/HWDA	**T972G**			
1.6 LPG	10.09 -	85	1596	4	SIDA	**T972G**			
1.6 Ti	11.04 -	85	1596	4	HXDB/HXDA	**T972G**			
Focus II Cabriolet									
1.6	10.06 -	74	1596	4	HWDB/HWDA	**T972G**			
Focus II Combi (DA_)									
1.4	11.04 -	59	1388	4	ASDB/ASDA	**T972G**			
1.6	11.04 -	74	1596	4	SHDA/HWDB/HWDA	**T972G**			
1.6 LPG	10.09 -	85	1596	4	SIDA	**T972G**			
1.6 Ti	11.04 -	85	1596	4	HXDB/HXDA	**T972G**			
Focus II Sedan (DA_)									
1.4	04.05 -	59	1388	4	ASDB/ASDA	**T972G**			
1.6	04.05 -	74	1596	4	SHDA/HWDB/HWDA	**T972G**			
1.6 Ti	04.05 -	85	1596	4	HXDB/HXDA	**T972G**			
Focus III									
1.6 Flexifuel	04.11 -	88	1596	4	MUDA	**T972G**			
1.6 LPG	02.12 -	88	1596	4	MUDA	**T972G**			
1.6 LPG	02.12 -	86	1596	4	MUDA	**T972G**			
1.6 Ti	08.11 -	63	1596	4	XTDA	**T972G**			
1.6 Ti	04.11 -	77	1596	4	IQDB	**T972G**			
1.6 Ti	02.12 -	88	1596	4	MUDA	**T972G**			
1.6 Ti	04.11 -	92	1596	4	PNDA	**T972G**			
Focus III Sedan									
1.6 Flexifuel	04.11 -	88	1596	4	MUDA	**T972G**			
1.6 Ti	08.11 -	63	1596	4	XTDA	**T972G**			
1.6 Ti	04.11 -	77	1596	4	IQDB	**T972G**			
1.6 Ti	04.11 -	92	1596	4	PNDA	**T972G**			
Focus III Turnier									
1.6 Flexifuel	05.11 -	88	1596	4	MUDA	**T972G**			
1.6 LPG	02.12 -	88	1596	4	MUDA	**T972G**			
1.6 LPG	02.12 -	86	1596	4	MUDA	**T972G**			
1.6 Ti	08.11 -	63	1596	4	XTDA	**T972G**			
1.6 Ti	05.11 -	77	1596	4	IQDB	**T972G**			
1.6 Ti	02.12 -	88	1596	4	MUDA	**T972G**			
1.6 Ti	05.11 -	92	1596	4	PNDA	**T972G**			
Focus C-Max									
1.6	10.03 - 03.07	74	1596	4	HWDB/HWDA	**T972G**			
1.6 Ti	08.04 - 03.07	85	1596	4	SIDA/HXDA	**T972G**			
Fusion (JU_)									
1.25	08.04 -	55	1242	4	FUJA/FUJB	**T894G**			
1.4	08.02 -	59	1388	4	FXJC/FXJB/FXJA	**T972G**			
1.6	08.02 -	74	1596	4	FYJA/FYJB	**T972G**			
Galaxy (WGR)									
2.0 i	11.95 - 03.00	85	1998	4	NSE	**T143G**			
2.0 i	02.01 - 05.06	85	1998	4	ZVSA	**T468G**			

FORD Galaxy (WGR) ▶

model	year	kW	cm³	cyl	engine	I	II	III	info
Galaxy (WGR)									
2.3 16V	01.97 - 03.00	107	2295	4	Y5B	**T471G**			semidirect
	04.00 - 05.06	107	2295	4	E5SA	**T468G**			
2.3 16V	09.01 - 05.06	103	2295	4	E5SB	**T468G**			
2.8 i V6	11.95 - 04.00	128	2792	6	AAA	**T823C**	**T062B**		original / alternative
2.8 i V6 4x4	04.96 - 04.00	128	2792	6	AAA	**T823C**	**T062B**		original / alternative
Granada (GU)									
2.0	08.79 - 08.85	74	1993	4	NEP	**T464G**			
2.0	08.77 - 08.85	66	1998	6	NYP	**T224G**			
2.3	08.77 - 06.79	79	2294	6	YYH	**T224G**			
2.8	08.77 - 08.85	99	2792	6	PYA	**T224G**			
2.8 i	10.82 - 08.85	110	2792	6	PRC	**T224G**			
Granada Combi (GNU)									
2.0	08.79 - 08.85	74	1993	4	NEP	**T464G**			
2.0	08.77 - 06.85	66	1998	6	NYP	**T224G**			
2.3	08.77 - 06.79	79	2294	6	YYH	**T224G**			
2.8	08.77 - 08.85	99	2792	6	PYA	**T224G**			
2.8 i	10.82 - 08.85	110	2792	6	PRC	**T224G**			
Grand C-Max									
1.6 Ti	12.10 -	77	1596	4	IQDB/IQDA	**T972G**			
1.6 Ti	12.10 -	92	1596	4	PNDA	**T972G**			
Ka (RB_)									
1.0 i	07.97 - 09.99	38	999	4	ZH10JRB	**T995G**			
1.0 i	09.99 - 11.08	48	999	4		**T995G**			
1.3 i	06.98 - 09.98	36	1299	4	JJH/JJD/JJF/JJG/JJL	**T164G**			DIN
	09.98 - 11.08	36	1299	4	JJH/JJD/JJF/JJG/JJL	**T790G**	**T995G**		PIN-boot design
1.3 i	09.98 - 10.02	37	1299	4	JJB	**T790G**	**T995G**		PIN-boot design
1.3 i	09.96 - 11.08	44	1299	4	BAA	**T465G**			engine code
	09.96 - 08.98	44	1299	4	J4S/J4K/J4M/J4P/J4N/J4D	**T164G**			DIN-engine code
	09.98 - 11.08	44	1299	4	J4S/J4K/J4M/J4P/J4N/J4D	**T790G**	**T995G**		PIN-boot design
1.3 i	08.02 - 11.08	51	1299	4	A9B/A9A	**T465G**			
1.6 i	07.03 - 11.08	70	1599	4	CDC/CDB	**T465G**			
Ka									
1.2	10.08 -	51	1242	4	FP4	**T631B**			
Maverick									
2.0 16V	02.01 -	91	1989	4	YF	**T726G**			
2.4 i	09.96 - 04.98	85	2389	4	KA-24	**T575B**			
2.4 i	09.96 - 04.98	87	2389	4	KA-24	**T575B**			
Mondeo I (GBP)									
1.6 i 16V	02.93 - 08.96	66	1597	4	L1F	**T227G**			
1.6 i 16V	07.94 - 08.96	65	1597	4	L1J	**T227G**			
1.8 i 16V	02.93 - 08.96	85	1796	4	RKA	**T227G**			
1.8 i 16V	07.94 - 08.96	82	1796	4	RKB	**T227G**			
1.8 i 16V 4x4	02.93 - 08.96	85	1796	4	RKA	**T227G**			
2.0 i 16V	02.93 - 08.96	100	1988	4	NGA	**T227G**			
2.0 i 16V	12.94 - 08.96	97	1988	4	NGA	**T227G**			
2.0 i 16V 4x4	12.94 - 08.96	97	1988	4	NGA	**T227G**			
2.0 i 16V 4x4	04.93 - 08.96	100	1988	4	NGA	**T227G**			
2.5 i 24V	07.94 - 08.96	125	2544	6	SEA	**T548G**			
Mondeo I Combi (BNP)									
1.6 i 16V	04.93 - 08.96	66	1597	4	L1F	**T227G**			
1.6 i 16V	07.94 - 08.96	65	1597	4	L1J	**T227G**			
1.8 i 16V	04.93 - 08.96	85	1796	4	RKA	**T227G**			
1.8 i 16V	07.94 - 08.96	82	1796	4	RKB	**T227G**			
1.8 i 16V 4x4	04.93 - 08.96	85	1796	4	RKA	**T227G**			
2.0 i 16V	01.93 - 08.96	97	1988	4	NGA	**T227G**			
2.0 i 16V	04.93 - 08.96	100	1988	4	NGA	**T227G**			
2.0 i 16V 4x4	12.94 - 08.96	97	1988	4	NGA	**T227G**			
2.0 i 16V 4x4	04.93 - 08.96	100	1988	4	NGA	**T227G**			
2.5 i 24V	07.94 - 08.96	125	2544	6	SEA	**T548G**			
Mondeo I Sedan (GBP)									
1.6 i 16V	02.93 - 08.96	66	1597	4	L1F	**T227G**			
1.6 i 16V	07.94 - 08.96	65	1597	4	L1J	**T227G**			
1.8 4x4	02.93 - 08.96	85	1796	4	RKA	**T227G**			
1.8 i 16V	02.93 - 08.96	85	1796	4	RKA	**T227G**			
1.8 i 16V	01.94 - 08.96	82	1796	4	RKB	**T227G**			
2.0 i 16V	02.93 - 08.96	100	1988	4	NGA	**T227G**			
2.0 i 16V 4x4	12.94 - 08.96	97	1988	4	NGA	**T227G**			
2.5 i 24V	07.94 - 08.96	125	2544	6	SEA	**T548G**			

FORD Mondeo II (BAP)

model	year	kW	cm³	cyl	engine	I	II	III	info
Mondeo II (BAP)									
1.6 i	09.96 - 08.98	66	1597	4	L1J	**T227G**			DIN
	09.98 - 11.00	66	1597	4	L1J	**T726G**			PIN
1.6 i 16V	05.98 - 11.00	70	1597	4	L1N/L1L/L1Q	**T726G**			
1.8 i	09.96 - 08.98	85	1796	4	RKK/RKJ/RKB/RKF/RKH	**T227G**			DIN
	09.98 - 11.00	85	1796	4	RKK/RKJ/RKB/RKF/RKH	**T726G**			PIN
2.0 i	09.96 - 08.98	96	1988	4	NGA/NGB/NGD/NGC	**T227G**			DIN
	09.98 - 11.00	96	1988	4	NGA/NGB/NGD/NGC	**T726G**			PIN
2.5 24V	09.96 - 11.00	125	2544	6	SEA	**T548G**			
2.5 24V	06.00 - 11.00	125	2495	6	SEB/SEC	**T548G**			DIN FORD
	06.00 - 11.00	125	2495	6	SEB/SEC	**T549G**			PIN
2.5 ST 200	05.99 - 11.00	151	2495	6	SGA	**T548G**			
Mondeo II Combi (BNP)									
1.6 i	09.96 - 08.98	66	1597	4	L1J	**T227G**			DIN
	09.98 - 11.00	66	1597	4	L1J	**T726G**			PIN
1.6 i 16V	05.98 - 11.00	70	1597	4	L1N/L1L/L1Q	**T726G**			
1.8 i	09.96 - 08.98	85	1796	4	RKK/RKJ/RKB/RKF/RKH	**T227G**			DIN
	09.98 - 11.00	85	1796	4	RKK/RKJ/RKB/RKF/RKH	**T726G**			PIN
2.0 i	09.96 - 08.98	96	1988	4	NGA/NGB/NGD/NGC	**T227G**			DIN
	09.98 - 11.00	96	1988	4	NGA/NGB/NGD/NGC	**T726G**			PIN
2.5 24V	09.96 - 11.00	125	2544	6	SEA	**T548G**			
2.5 24V	10.99 - 11.00	125	2495	6	SEB/SEC	**T548G**			DIN FORD
	10.99 - 11.00	125	2495	6	SEB/SEC	**T549G**			PIN
2.5 ST 200	05.99 - 11.00	151	2495	6	SGA	**T548G**			
Mondeo II Sedan (BFP)									
1.6 i	09.96 - 08.98	66	1597	4	L1J	**T227G**			DIN
	09.98 - 11.00	66	1597	4	L1J	**T726G**			PIN
1.6 i 16V	05.98 - 11.00	70	1597	4	L1N/L1L/L1Q	**T726G**			
1.8 i	09.96 - 08.98	85	1796	4	RKK/RKJ/RKB/RKF/RKH	**T227G**			DIN
	09.98 - 11.00	85	1796	4	RKK/RKJ/RKB/RKF/RKH	**T726G**			PIN
2.0 i	09.96 - 08.98	96	1988	4	NGA/NGB/NGD/NGC	**T227G**			DIN
	09.98 - 11.00	96	1988	4	NGA/NGB/NGD/NGC	**T726G**			PIN
2.5 24V	09.96 - 11.00	125	2544	6	SEA	**T548G**			
2.5 24V	06.00 - 11.00	125	2495	6	SEB/SEC	**T548G**			DIN
	06.00 - 11.00	125	2495	6	SEB/SEC	**T549G**			PIN
2.5 ST 200	05.99 - 11.00	151	2495	6	SGA	**T548G**			
Mondeo III (B5Y)									
1.8 16V	11.00 - 08.07	81	1798	4	CGBB/CGBA	**T965G**			
1.8 16V	11.00 - 08.07	92	1798	4	CHBA/CHBB	**T965G**			
2.0 16V	11.00 - 08.07	107	1999	4	CJBA/CJBB	**T965G**			
2.5 V6 24V	11.00 - 08.07	125	2495	6	LCBD	**T549G**			
3.0 V6 24V	09.04 - 08.07	150	2967	6	REBA	**T573G**			
3.0 ST220	04.02 - 08.07	166	2967	6	MEBA	**T573G**			
Mondeo III Combi (BWY)									
1.8 16V	11.00 - 08.07	81	1798	4	CGBB/CGBA	**T965G**			
1.8 16V	11.00 - 08.07	92	1798	4	CHBA/CHBB	**T965G**			
2.0 16V	11.00 - 08.07	107	1999	4	CJBA/CJBB	**T965G**			
2.5 V6 24V	11.00 - 08.07	125	2495	6	LCBD	**T549G**			
3.0 V6 24V	09.04 - 08.07	150	2967	6	REBA	**T573G**			
3.0 ST220	04.02 - 08.07	166	2967	6	MEBA	**T573G**			
Mondeo III Sedan (B4Y)									
1.8 16V	11.00 - 08.07	81	1798	4	CGBB/CGBA	**T965G**			
1.8 16V	11.00 - 08.07	92	1798	4	CHBA/CHBB	**T965G**			
2.0 16V	11.00 - 08.07	107	1999	4	CJBA/CJBB	**T965G**			
2.5 V6 24V	11.00 - 08.07	125	2495	6	LCBD	**T549G**			
3.0 V6 24V	09.04 - 08.07	150	2967	6	REBA	**T573G**			
3.0 ST220	04.02 - 08.07	166	2967	6	MEBA	**T573G**			
Mondeo IV									
1.6 Ti	03.07 - 09.14	81	1596	4	RHBA	**T972G**			
1.6 Ti	03.07 - 09.14	92	1596	4	PNBA	**T972G**			
1.6 Ti	07.10 - 09.14	88	1596	4	KGBA	**T972G**			
Mondeo IV Sedan									
1.6 Ti	03.07 - 09.14	92	1596	4	PNBA	**T972G**			
Mondeo IV Turnier									
1.6 Ti	03.07 - 12.12	81	1596	4	RHBA	**T972G**			
1.6 Ti	03.07 - 12.10	92	1596	4	PNBA	**T972G**			
1.6 Ti	07.10 - 09.14	88	1596	4	KGBA	**T972G**			
Orion I (AFD)									
1.3	07.83 - 03.86	51	1296	4	JPA	**T463G**			
1.6	07.83 - 03.86	58	1597	4	LP1/LPA	**T463G**			
1.6 i	07.83 - 03.86	77	1597	4	LRA/LR1	**T463G**			

FORD Orion II (AFF) ▶

model	year	kW	cm³	cyl	engine	I	II	III	info
Orion II (AFF)									
1.3	12.85 - 07.90	44	1297	4	JLA/JBB/JLB	**T410G**			without distributor
	12.85 - 07.90	44	1297	4	JLA/JBB/JLB	**T463G**			with distributor
1.4	12.85 - 07.90	55	1392	4	FUA	**T463G**			
1.4	03.86 - 07.90	52	1392	4	FUAA	**T140G**			
1.4	01.86 - 07.90	54	1392	4	FUC	**T466G**			
1.4 cat	02.87 - 07.90	54	1392	4	F6D/F6B	**T463G**			
1.6	12.85 - 07.90	66	1597	4	LUC	**T410G**			without distributor
	12.85 - 07.90	66	1597	4	LUC	**T463G**			with distributor
1.6 i	03.86 - 07.90	77	1597	4	LRB	**T463G**			
1.6 i	08.89 - 07.90	75	1597	4	LJB	**T410G**			without distributor
	08.89 - 07.90	75	1597	4	LJB	**T463G**			with distributor
1.6 i cat	03.86 - 07.90	66	1597	4	L4B	**T463G**			
Orion III (GAL)									
1.3	07.90 - 12.93	44	1299	4	J6A/J4B	**T410G**			
1.4	07.90 - 12.93	52	1391	4	F6F/F6G	**T744G**			
1.4	07.90 - 12.93	54	1392	4	FUH	**T744G**			
1.6	07.90 - 12.92	66	1598	4	LUJ/LUK	**T744G**			
1.6 i	07.90 - 09.92	77	1598	4	LJF	**T501G**			
1.6 i 16V	07.92 - 12.93	66	1597	4	L1E/L1K	**T227G**			
1.8 i 16V	02.92 - 12.93	77	1796	4	RDA	**T227G**			
1.8 i 16V	01.92 - 12.93	96	1796	4	RQB	**T227G**			
Probe I									
2.2	08.88 - 07.93	82	2184	4		**T756G**			
2.2 GT	08.88 - 12.92	108	2184	4		**T756G**			
3.0 V6	09.89 - 07.93	104	2979	6		**T467G**			
Probe II (ECP)									
2.0 16V	10.93 - 03.98	85	1991	4	FS	**T776B**			
2.5 V6 24V	10.93 - 03.98	119	2497	6	KL	**T872B**			
2.5 V6 24V	12.94 - 03.98	120	2497	6	KL	**T872B**			
Puma (EC_)									
1.4 16V	11.97 - 04.98	66	1388	4	FHD/FHF	**T773G**			DIN
	05.98 - 04.00	66	1388	4	FHD/FHF	**T894G**			PIN
	05.00 -	66	1388	4	FHD/FHF	**T500G**			PIN
1.6 16V	08.00 - 06.02	76	1596	4	L1W	**T726G**			
1.7 16V	03.97 - 04.98	92	1679	4	MHB/MHA	**T773G**			DIN
	05.98 - 06.02	92	1679	4	MHB/MHA	**T500G**	**T894G**		PIN-boot design
1.7 ST 160	06.99 - 04.00	118	1679	4		**T773G**			
	05.00 - 06.02	118	1679	4		**T972G**			
Scorpio I (GAE, GGE)									
1.8	04.85 - 02.92	66	1796	4	REC	**T462G**			
2.0	04.85 - 08.89	77	1993	4	N8D/NEL	**T462G**			
2.0 i	10.85 - 12.85	74	1993	4	NRC	**T466G**			
	01.86 - 12.90	74	1993	4	NRC	**T146G**			
2.0 i	04.85 - 02.92	85	1993	4	NRI/NRA	**T228G**			
2.0 i	02.92 - 09.94	85	1993	4	NRI/NRA	**T228G**			
2.0 i	05.89 - 09.94	88	1998	4	N9D	**T228G**			
2.4 i	10.88 - 02.92	92	2394	6	ARD	**T124G**			DIN
	10.88 - 02.92	92	2394	6	ARD	**T125G**			SAE
2.4 i	09.86 - 06.87	96	2394	6	ARC	**T125G**			
2.4 i cat	10.88 - 09.94	92	2394	6	ARD	**T124G**			DIN
	10.88 - 09.94	92	2394	6	ARD	**T125G**			SAE
2.8 i	04.85 - 11.86	110	2792	6	PRE	**T141G**			
2.8 i 4x4	10.85 - 11.86	110	2792	6	PRE	**T141G**			
2.9 i	09.86 - 09.94	107	2933	6	BRD/BRE/BRF	**T125G**			
2.9 i	09.86 - 09.94	110	2933	6	BRC	**T141G**			
2.9 i 24V	04.91 - 09.94	143	2933	6	BOA	**T226G**			
2.9 i 4x4	09.86 - 09.94	110	2933	6	BRC	**T141G**			
2.9 i 4x4	05.88 - 02.93	107	2933	6	BRD/BRE/BRF	**T125G**			
2.9 i cat	10.87 - 08.88	107	2933	6	BRE	**T125G**			
	09.88 - 09.94	107	2933	6	BRE	**T124G**			
Scorpio I Combi (GGE)									
2.0 i	09.91 - 09.94	85	1998	4	N9F	**T228G**			
2.0 i	09.91 - 09.94	88	1998	4	N9D	**T228G**			
2.4 i	09.91 - 09.94	92	2394	6	ARD	**T124G**			DIN
	09.91 - 09.94	92	2394	6	ARD	**T125G**			SAE
2.9 24V	08.93 - 09.94	143	2933	6	BOA	**T226G**			
2.9 i	09.91 - 09.94	107	2933	6	BRD/BRE/BRF	**T125G**			
2.9 i 4x4	05.88 - 02.93	107	2933	6	BRD/BRE/BRF	**T125G**			
Scorpio I Sedan (GGE)									
2.0	03.90 - 08.92	77	1998	4	N8B	**T462G**			

FORD Scorpio I Sedan (GGE) ▶

model	year	kW	cm³	cyl	engine	I	II	III	info
Scorpio I Sedan (GGE)									
2.0 i	02.92 - 09.94	85	1998	4	N9F	**T228G**			
2.0 i	05.89 - 09.94	88	1998	4	N9D	**T228G**			
2.4 i	10.88 - 10.94	92	2394	6	ARD	**T124G**			DIN
	10.88 - 10.94	92	2394	6	ARD	**T125G**			SAE
2.9 i	09.86 - 12.94	107	2933	6	BRD/BRE/BRF	**T125G**			
2.9 i 24V	04.91 - 09.94	143	2933	6	BOA	**T226G**			
2.9 i 4x4	12.89 - 10.94	107	2933	6	BRD/BRE/BRF	**T125G**			
Scorpio II (GFR, GGR)									
2.0 i	10.94 - 08.98	85	1998	4	NSD	**T223G**			
2.0 i 16V	10.94 - 08.98	100	1998	4	N3A	**T223G**			with distributor
	10.94 - 08.98	100	1998	4	N3A	**T471G**			semidirect
2.3 i 16V	06.96 - 08.98	108	2295	4	Y5A	**T223G**			with distributor
	06.96 - 08.98	108	2295	4	Y5A	**T471G**			semidirect
2.9 i	02.95 - 08.98	110	2933	6	BRG	**T130G**			
2.9 i 24V	10.94 - 08.98	152	2933	6	BOB	**T193G**			
Scorpio II Combi (GNR, GGR)									
2.0 i	10.94 - 08.98	85	1998	4	NSD	**T223G**			
2.0 i 16V	10.94 - 08.98	100	1998	4	N3A	**T223G**			with distributor
	10.94 - 08.98	100	1998	4	N3A	**T471G**			semidirect
2.3 i 16V	06.96 - 08.98	108	2295	4	Y5A	**T223G**			with distributor
	06.96 - 08.98	108	2295	4	Y5A	**T471G**			semidirect
2.9 i	02.95 - 08.98	110	2933	6	BRG	**T130G**			
2.9 i 24V	10.94 - 08.98	152	2933	6	BOB	**T193G**			
Sierra (GBG, GB4)									
1.6	01.87 - 02.93	55	1597	4	LSE	**T146G**			
1.6	01.88 - 02.93	53	1597	4	LSF	**T146G**			
1.6 i	10.89 - 02.93	59	1597	4	L6B	**T146G**			
1.8	10.87 - 09.89	59	1796	4	RED/REF	**T469G**			
1.8	01.87 - 05.88	66	1796	4	R2A	**T470G**			
1.8	05.88 - 02.93	64	1769	4	R2C/R6A	**T789G**			
2.0	01.87 - 02.93	77	1993	4	N8C/NES	**T228G**			
2.0 4x4	01.90 - 02.93	92	1998	4	N9C	**T228G**			
2.0 i	01.87 - 12.89	74	1993	4	NE5/NEJ	**T470G**			
2.0 i	01.87 - 02.93	85	1993	4	N4I/N4A	**T466G**			
2.0 i	01.90 - 02.93	92	1998	4	N9C	**T228G**			
2.0 i cat	01.87 - 02.93	74	1993	4	N4B	**T470G**			
2.0 i DOHC	12.91 - 02.93	85	1998	4	N9E	**T223G**			
2.9 4x4	08.88 - 02.93	110	2935	6	B4B/B4C	**T124G**			
2.9 4x4	08.88 - 02.93	107	2935	6	B4B/B4C	**T124G**			
2.9 i	08.88 - 02.93	107	2935	6	B4B/B4C	**T124G**			
2.9 i	08.88 - 02.93	110	2935	6	B4B/B4C	**T124G**			
Sierra Hatchback (GBC)									
1.3	08.82 - 12.86	44	1294	4	JCT	**T470G**			
1.6	08.82 - 12.86	55	1593	4	LCS/LCT/LSD	**T470G**			
1.8	10.84 - 10.85	66	1796	4	REB	**T466G**			
	10.85 - 12.86	66	1796	4	REB	**T470G**			
2.0	08.82 - 10.84	66	1999	6	NYT	**T152G**			
2.0	08.82 - 10.85	77	1993	4	NET	**T466G**			
	10.85 - 12.86	77	1993	4	NET	**T470G**			
2.0 i	03.85 - 12.86	85	1993	4	NR2/NRB	**T466G**			
2.3	08.82 - 12.86	84	2294	6	YYT	**T152G**			
2.8 i XR 4x4	09.83 - 12.86	107	2792	6	PR5/PR6	**T152G**			
2.8 XR 4x4	02.85 - 12.86	110	2792	6	PRT	**T152G**			
2.8 XR4i	08.82 - 12.86	110	2792	6	PRT	**T152G**			
2.8 XR4i	08.82 - 12.86	107	2792	6	PR5	**T152G**			
Sierra Hatchback (GBC, GBG)									
1.6	01.87 - 02.93	55	1597	4	LSE	**T146G**			
1.6	01.88 - 02.93	53	1597	4	LSF	**T146G**			
1.6 i	10.89 - 02.93	59	1598	4	L6B	**T146G**			
1.8	10.87 - 05.88	59	1796	4	RED/REF	**T469G**			
1.8	05.88 - 02.93	64	1769	4	R2C/R6A	**T789G**			
1.8	01.87 - 05.88	66	1796	4	RED/R2A	**T470G**			
2.0	01.87 - 02.93	77	1993	4	N8C/NES	**T228G**			
2.0 i	01.87 - 02.93	74	1993	4	NE5/NEJ	**T470G**			
2.0 i	01.87 - 02.93	85	1993	4	N4I/N4A	**T466G**			
2.0 i	06.89 - 02.93	88	1998	4	N9C	**T228G**			
2.0 i	06.89 - 02.93	92	1998	4	N9B	**T228G**			
2.0 i cat	01.87 - 02.93	74	1993	4	N4B	**T470G**			
2.0 i DOHC	12.91 - 02.93	85	1998	4	N9E	**T223G**			
2.8 i XR 4x4	01.87 - 08.88	110	2792	6	PRG	**T152G**			

FORD Sierra Hatchback (GBC, GBG) ▶

model	year	kW	cm³	cyl	engine	I	II	III	info
Sierra Hatchback (GBC, GBG)									
2.9 i	08.88 - 02.93	107	2936	6	B4B/B4C	**T124G**			
2.9 i XR 4x4	08.88 - 02.93	110	2936	6	B4A	**T124G**			
2.9 i XR 4x4	08.88 - 02.93	107	2936	6	B4B/B4C	**T124G**			
Sierra Combi (BNC)									
1.6	08.82 - 12.86	55	1593	4	LCS/LCT/LSD	**T470G**			
1.8	10.84 - 10.85	66	1796	4	REB	**T466G**			
	10.85 - 12.86	66	1796	4	REB	**T470G**			
2.0	08.82 - 10.84	66	1999	6	NYT	**T152G**			
2.0	08.82 - 10.85	77	1993	4	NET	**T466G**			
	10.85 - 12.86	77	1993	4	NET	**T470G**			
2.0	03.85 - 12.86	85	1993	4	NR2/NRB	**T466G**			
2.3	08.82 - 12.86	84	2294	6	YYT	**T152G**			
2.8 i 4x4	08.82 - 12.86	105	2792	6	PR6	**T152G**			
2.8 i 4x4	08.82 - 12.86	107	2792	6	PR6	**T152G**			
2.8 XR4i	08.82 - 12.86	105	2792	6	PR6	**T152G**			
2.8 XR4i	08.82 - 12.86	107	2792	6	PR5	**T152G**			
Sierra Combi (BNG)									
1.6	01.88 - 02.93	53	1597	4	LSF	**T146G**			
1.6	01.87 - 02.93	55	1597	4	LSE	**T146G**			
1.6 i	10.89 - 02.93	59	1598	4	L6B	**T146G**			
1.8	05.88 - 02.93	64	1769	4	R2C/R6A	**T789G**			
1.8	10.87 - 05.88	59	1796	4	RED/REF	**T469G**			
1.8	01.87 - 05.88	66	1796	4	R2A	**T470G**			
2.0	01.87 - 02.93	77	1993	4	N8C/NES	**T228G**			
2.0 4x4	02.90 - 02.93	88	1998	4	N9C	**T228G**			
2.0 4x4	05.89 - 02.93	92	1998	4	N9C	**T228G**			
2.0 i	01.87 - 02.93	74	1993	4	NE5/NEJ	**T470G**			
2.0 i	01.87 - 02.93	85	1993	4	N4I/N4A	**T466G**			
2.0 i	05.89 - 02.93	88	1998	4	N9C	**T228G**			
2.0 i	05.89 - 02.93	92	1998	4	N9C	**T228G**			
2.0 i cat	01.87 - 02.93	74	1993	4	N4B	**T470G**			
2.0 i DOHC	12.91 - 02.93	85	1998	4	N9E	**T223G**			
2.8 4x4	01.87 - 08.88	110	2792	6	PRG	**T152G**			
2.9	08.88 - 02.93	107	2936	6	B4B/B4C	**T124G**			
2.9 4x4	08.88 - 02.93	107	2936	6	B4B/B4C	**T124G**			
2.9 4x4	08.88 - 02.93	110	2935	6	B4B/B4C	**T124G**			
2.9 i	08.88 - 02.93	110	2935	6	B4B/B4C	**T124G**			
Street Ka									
1.6	05.03 - 07.05	70	1599	4	CDRA/CDRB	**T465G**			
Tourneo Connect									
1.8 16V	06.02 -	85	1796	4	EYPC/EYPA/EYPD	**T726G**			
Transit Connect (P65_, P70_, P80_)									
1.8 16V	06.02 -	85	1796	4	EYPC/EYPA/EYPD	**T726G**			
Transit (V_ _)									
1.6 Bus	12.77 - 10.86	48	1593	4	4RB	**T146G**			
1.6 Van	11.77 - 10.86	48	1593	4	4RB	**T146G**			
2.0 Bus	11.77 - 10.86	55	1993	4	4RC	**T146G**			
2.0 Van	11.77 - 10.86	55	1993	4	4RC	**T146G**			
Transit (T_ _)									
1.6 Bus	12.85 - 01.89	46	1593	4	LAT	**T146G**			
1.6 Van	09.85 - 09.92	46	1593	4	LAT	**T146G**			
2.0 Bus	12.85 - 09.92	57	1993	4	N6T	**T146G**			
2.0 Bus	11.85 - 09.92	57	1994	4	NAT/NAV	**T476G**			
2.0 Flatbed	01.86 - 09.92	57	1994	4	NAT/NAV	**T476G**			
2.0 Flatbed	11.85 - 09.92	57	1993	4	N6T	**T146G**			
2.0 Van	09.85 - 09.92	57	1994	4	NAT/NAV	**T476G**			
Transit (E_ _)									
2.0 Bus	09.91 - 09.94	66	1993	4	NBA	**T146G**			
2.0 Bus	09.91 - 07.94	72	1994	4	NCA	**T146G**			
2.0 Bus	09.95 - 03.00	84	1998	4	NSF/NSG	**T223G**			
2.9 i Bus	01.91 - 09.94	107	2935	6	BRT	**T130G**			
2.0 CNG Bus	06.94 - 03.00	84	1998	4	NSH	**T223G**			
2.0 Flatbed	08.94 - 03.00	84	1998	4	NSF/NSG	**T223G**			
2.0 Flatbed	09.91 - 08.94	72	1994	4	NCA	**T146G**			
2.0 Van	09.91 - 06.94	66	1993	4	NBA	**T146G**			
2.0 Van	06.94 - 03.00	84	1998	4	NSF/NSG	**T223G**			
2.0 Van	09.91 - 06.94	72	1994	4	NCA	**T146G**			
2.0 Tourneo	11.94 - 12.00	84	1998	4	NSH	**T223G**			
Transit (F_ _)									
2.3 16V Bus	08.00 - 05.06	107	2295	4	E5FC/E5FA	**T471G**			semidirect

FORD Transit (F_ _) ▶

model	year	kW	cm³	cyl	engine	I	II	III	info
Transit (F_ _)									
2.3 16V Flatbed	04.01 - 05.06	107	2295	4	E5FC/E5FA	**T471G**			semidirect
2.3 16V Van	04.01 - 05.06	107	2295	4	E5FC/E5FA	**T471G**			semidirect
FSO									
126P									
0.6	07.77 - 12.91	22	652	2	126 A1.048	**T336B**			
0.6	07.72 - 07.77	17	594	2		**T336B**			
0.65	07.81 - 09.00	18	652	2	126 A1.048	**T338B**			
Polonez II									
1.5 i	08.88 - 08.92	55	1481	4		**T833B**			
1.5	08.88 - 08.92	55	1481	4	AA	**T339B**			
1.6	08.88 - 08.92	64	1598	4	CB	**T339B**			
Polonez III									
1.4 i 16V	09.92 - 03.02	76	1398	4	Rover K16 DOHC	**T834B**			
1.6 i	09.92 - 03.02	57	1598	4		**T832B**	**T833B**		PIN or SAE
1.6 i Sedan	09.92 - 03.02	57	1598	4		**T832B**	**T833B**		PIN or SAE
GAZ									
Gazelle (GAZ 2705, 3221, 3302, 33023)									
2.3i 16V	10.93 - 08.01	81	2280	4	ZMZ 4063	**T712S**	**T696H**	**T713M**	premium / basic / inductive
2.4	10.93 - 08.01	73	2445	4	ZMZ 4026	**T358S**	**T342H**	**T415M**	premium / basic / inductive
2.5i 16V	10.93 - 08.01	90	2460	4	ZMZ 40522	**T712S**	**T696H**	**T713M**	premium / basic / inductive
2.9	10.93 - 08.01	70	2890	4	UMZ 4215	**T358S**	**T342H**	**T415M**	premium / basic / inductive
Gazelle Bussines (GAZ 2705, 3221, 3302)									
2.9i Euro 3	- 06	79	2890	4	UMZ 4216	**T677S**	**T676H**	**T678M**	premium / basic / inductive
2.9i Euro 3	08.09 -	90	2890	4	UMZ 4216	**T417S**	**T354H**	**T347M**	premium / basic / inductive
2.9i Euro 4	03.11 -	90	2890	4	UMZ 4216	**T343S**	**T341H**	**T345M**	premium / basic / inductive
Gazelle Next Bus, Van, Flatbed									
2.7i Euro 4, 5	04.13 -	78	2690	4	A2755	**T343S**	**T341H**	**T345M**	premium / basic / inductive
2.9i Euro 4	04.13 -	78	2890	4	UMZ 4216	**T343S**	**T341H**	**T345M**	premium / basic / inductive
Volga (GAZ 24, 2401, 2402, 2410, 2411, 2412)									
2.4	70 - 85	63	2445	4	ZMZ 2401	**T358S**	**T342H**	**T415M**	premium / basic / inductive
2.4	70 - 85	70	2445	4	ZMZ 24D	**T358S**	**T342H**	**T415M**	premium / basic / inductive
2.4	85 - 92	66	2445	4	ZMZ 4021	**T358S**	**T342H**	**T415M**	premium / basic / inductive
2.4	85 - 92	73	2445	4	ZMZ 402	**T358S**	**T342H**	**T415M**	premium / basic / inductive
Volga (GAZ 3102, 3110, 31105, 3111)									
2.3i 16V (3102)	85 - 09	106	2280	4	ZMZ 4062	**T712S**	**T696H**	**T713M**	premium / basic / inductive
2.4	80 - 09	73	2445	4	ZMZ 402	**T358S**	**T342H**	**T415M**	premium / basic / inductive
2.4	80 - 09	66	2445	4	ZMZ 4021	**T358S**	**T342H**	**T415M**	premium / basic / inductive
2.4 16V (31105)	06.07 - 09	105	2429	4	Chrysler DOHC	**T106S**	**T891H**	**T679M**	premium / basic / inductive
2.4 16V Siber	03.08 - 05.10	105	2429	4	Chrysler DOHC	**T106S**	**T891H**	**T679M**	premium / basic / inductive
2.5i 16V	97 - 09	112	2500	4	ZMZ 4052	**T712S**	**T696H**	**T713M**	premium / basic / inductive
Sobol (GAZ 2217, 2310, 2752)									
2.3i 16V	09.97 - 04.06	81	2280	4	ZMZ 4063	**T712S**	**T696H**	**T713M**	premium / basic / inductive
2.4	09.97 - 04.06	73	2445	4	ZMZ 4026	**T358S**	**T342H**	**T415M**	premium / basic / inductive
2.5i 16V	04.03 - 04.13	90	2460	4	ZMZ 40522	**T712S**	**T696H**	**T713M**	premium / basic / inductive
Sobol Bussines (GAZ 2217, 2310, 2752)									
2.9i Euro 3	- 06	79	2890	4	UMZ 4216	**T677S**	**T676H**	**T678M**	premium / basic / inductive
2.9i Euro 3	08.09 -	90	2890	4	UMZ 4216	**T417S**	**T354H**	**T347M**	premium / basic / inductive
2.9i Euro 4	03.11 -	90	2890	4	UMZ 4216	**T343S**	**T341H**	**T345M**	premium / basic / inductive
GEELY									
CK									
1.5	05 - 09	69	1498	4	MR479QA	**T379B**			
CK-2									
1.5	10 -	69	1498	4	MR479QA	**T379B**			
MK I									
1.5	06 -	69	1498	4	MR479QA	**T379B**			
MK II									
1.5	09 -	69	1498	4	MR479QA	**T379B**			
MK Cross									
1.5	10 -	69	1498	4	MR479QA	**T379B**			
Otaka									
1.5	05 - 09	69	1498	4	MR479QA	**T379B**			
GREAT WALL									
Deer G1 /G2 /G3 /G4 /G5									
2.2i Euro 2	04 -	78	2237	4	491QE	**T370B**			
2.2i Euro 3	04 -	78	2237	4	491QE	**T332B**			

GREAT WALL Hover

model	year	kW	cm³	cyl	engine	I	II	III	info
Hover									
2.4	05 - 10	95	2350	4	4G64S4M	**T315B**			
Pegasus									
2.2i Euro 2	04 -	78	2237	4	491QE	**T370B**			
2.2i Euro 3	04 -	78	2237	4	491QE	**T332B**			
Ruv Sing									
2.2i Euro 2	04 -	78	2237	4	491QE	**T370B**			
2.2i Euro 3	04 -	78	2237	4	491QE	**T332B**			
Safe									
2.2i Euro 2	04 - 10	78	2237	4	491QE	**T370B**			
2.2i Euro 3	04 - 10	78	2237	4	491QE	**T332B**			
Sailor									
2.2i Euro 2	04 -	78	2237	4	491QE	**T370B**			
2.2i Euro 3	04 -	78	2237	4	491QE	**T332B**			
Socool C3									
2.2i Euro 2	04 -	78	2237	4	491QE	**T370B**			
2.2i Euro 3	04 -	78	2237	4	491QE	**T332B**			
HONDA									
Accord I (SJ, SY), Accord I Hatchback (SJ, SY)									
1.6 L/EX	01.78 - 09.83	59	1602	4	EL	**T229B**			
Accord II (AC, AD), Accord II Hatchback (AC, AD)									
1.6 EX	09.83 - 10.85	65	1598	4	EZ	**T229B**			
1.8 EX	09.83 - 10.85	74	1829	4	ET1	**T229B**			
Accord III (CA4, CA5), Accord III Aerodeck (CA5)									
2.0 EX	11.85 - 12.89	76	1955	4	A20A1	**T229B**			
2.0 EX	11.85 - 05.89	78	1955	4	A20A2	**T229B**			
2.0 EXi	01.86 - 12.89	85	1955	4	A20A3	**T229B**			
2.0 EXi	11.85 - 12.87	90	1955	4	A20A4	**T229B**			
Accord IV (CB)									
1.8	01.90 - 12.91	77	1829	4		**T895B**			
2.0 16V	01.90 - 03.93	66	1997	4	F20A6	**T895B**			
2.0 16V	01.90 - 03.93	81	1997	4	F20A3/F20A2	**T895B**			
2.0 i 16V	01.90 - 03.93	98	1997	4	F20A4/F20A8	**T895B**			
2.2 i 16V	01.90 - 03.93	110	2156	4	F22A3	**T895B**			
2.2 i 16V Automatic	01.90 - 03.93	108	2156	4	F22A3	**T895B**			
Accord IV Aerodeck (CB)									
2.0 i 16V	03.93 - 12.93	98	1997	4	F20Z3	**T895B**			
2.2 i 16V	01.91 - 12.93	108	2156	4	F22A8	**T895B**			
2.2 i 16V	01.91 - 12.93	110	2156	4	F22A7	**T895B**			
Accord IV Coupe (CC1)									
2.0 i 16V	01.92 - 09.93	98	1997	4	F20A7	**T895B**			
Accord V (CC7, CD)									
2.0 i	03.93 - 01.96	85	1997	4	F20Z2	**T895B**			
2.0 i S	03.93 - 01.96	96	1997	4	F20Z1	**T895B**			
2.3 i SR	03.93 - 01.96	116	2259	4	H23A3	**T846B**			
Accord V Aerodeck (CE)									
2.0 i LS	09.93 - 02.98	100	1997	4	F20B3	**T895B**			
2.2 i ES	09.93 - 02.98	110	2156	4	F22B5	**T232B**	**T895B**		boot design
Accord V Coupe (CD7, CD9)									
2.0	09.93 - 12.97	100	1997	4	F20B3	**T895B**			
2.2 i ES	09.93 - 02.98	110	2156	4	F22B5	**T232B**	**T895B**		boot design
Accord VI (CE, CF)									
1.9 i	02.96 - 10.98	85	1850	4	F18A3	**T895B**			
2.0 i LS	02.96 - 10.98	96	1997	4	F20Z1	**T895B**			
2.2 i VTEC	02.96 - 10.98	110	2156	4	F22Z2	**T847B**			
Accord VII (CG, CK)									
1.8 i	10.98 - 12.02	100	1850	4	F18B2	**T895B**			
2.0 i	10.98 - 01.01	108	1997	4	F20B6	**T847B**			
2.2 Type-R	02.99 - 12.02	156	2157	4	H22A7	**T547B**			
2.3	01.01 - 06.03	113	2254	4	F23Z5/F23A1	**T847B**			
Accord VII Coupe (CG)									
2.0 i 16V	02.98 - 06.03	108	1997	4	F20B7/F20B5	**T232B**			
3.0 V6 24V	02.98 - 06.03	147	2997	6	J30A1	**T648B**			
Accord VII Hatchback (CH)									
1.8 i	12.99 - 12.02	100	1850	4	F18B2	**T895B**			
2.0	12.99 - 12.02	108	1997	4	F20B6	**T847B**			
Civic I Shuttle (AN, AR)									
1.5	10.83 - 10.87	63	1488	4	EW2	**T835B**			
1.5 4WD	01.85 - 10.87	63	1488	4	EW2	**T835B**			

HONDA Civic II Shuttle (EE) ▶

model	year	kW	cm³	cyl	engine	I	II	III	info
Civic II Shuttle (EE)									
1.6 i 16V 4WD	01.88 - 02.95	81	1590	4	D16A6	**T570B**			
Civic III Hatchback, Civic III Sedan									
1.2	01.84 - 10.87	40	1187	4	ZA2/D12B1	**T231B**			
1.3	10.83 - 10.87	52	1342	4	EV2	**T231B**			
1.5 GL	10.83 - 10.87	63	1488	4	EW2	**T835B**			
1.5 GT	01.85 - 10.87	74	1488	4	EW3	**T835B**			
Civic IV Hatchback (EC, ED, EE)									
1.3	10.87 - 12.89	55	1343	4	D13B1	**T847B**			
1.3 16 V cat	09.89 - 09.91	55	1343	4	D13B2	**T570B**			
1.4 L (EC9)	10.87 - 12.89	66	1396	4	D14A1	**T570B**			
1.5 i 16V	10.88 - 09.91	66	1493	4	D15B2	**T570B**			
1.5 i 16V	10.88 - 09.91	69	1493	4	D15B2	**T570B**			
1.6 i 16V	09.87 - 09.91	96	1590	4	D16A9	**T572B**			
	09.87 - 09.91	96	1590	4	D16A7	**T846B**			
1.6 i 16V	10.87 - 09.91	81	1590	4	D16Z2	**T570B**			
Civic IV Sedan (ED)									
1.3	10.87 - 12.89	55	1343	4	D13B1	**T847B**			
1.4 L	10.87 - 12.89	66	1396	4	D14A1	**T570B**			
1.5 i 16V	10.87 - 09.91	66	1493	4	D15B2	**T570B**			
1.5 i 16V	10.87 - 09.91	69	1493	4	D15B2	**T570B**			
1.6 i 16V	09.87 - 09.91	96	1590	4	D16A7	**T846B**			
1.6 i 16V	10.87 - 09.91	81	1590	4	D16Z2	**T570B**			
Civic V Coupe (EJ)									
1.5 i LSi	01.94 - 11.95	74	1493	4	D15B7	**T570B**	**T847B**		boot design
1.6 i	01.94 - 11.95	77	1590	4	D16Y7	**T847B**			
1.6 i Vtec	01.94 - 11.95	118	1595	4	B16A2	**T846B**			
1.6 i Vtec	01.94 - 03.96	92	1590	4	D16Y6	**T230B**			
	01.94 - 03.96	92	1590	4	D16Z9	**T847B**			
Civic V Hatchback (EG)									
1.3 16V	10.91 - 11.95	55	1343	4	D13B2	**T570B**	**T847B**		boot design
1.5 i 16V	10.91 - 11.95	66	1493	4	D15B2/D15Z2	**T847B**			
1.5 i 16V	10.91 - 11.95	69	1493	4	D15Z1	**T230B**			
	10.91 - 11.95	69	1493	4	D15B2	**T847B**			
1.6 16V	10.91 - 11.95	92	1590	4	D16Z6	**T230B**			
1.6 VTi 16V	10.91 - 11.95	118	1595	4	B16A2	**T846B**			
Civic V Sedan (EG, EH)									
1.3	01.92 - 12.92	55	1343	4	D13B2	**T570B**			
1.5	01.92 - 12.92	61	1493	4	D15B2	**T847B**			
1.5 i 16V	10.91 - 11.95	69	1493	4	D15B2	**T847B**			
1.6 16V Vtec	10.91 - 11.95	92	1590	4	D16Z6/D16Z7	**T230B**			
1.6 VTi	10.91 - 11.95	118	1595	4	B16A2	**T846B**			
Civic VI Aerodeck (MB, MC)									
1.4 16V	04.98 - 02.01	55	1396	4	D14A7	**T847B**			
1.4 16V	04.98 - 02.01	66	1396	4	D14A8	**T847B**			
1.5 16V	04.98 - 02.01	84	1493	4	D15Z8	**T847B**			
1.6 16V	04.98 - 02.01	85	1590	4	D16B2	**T847B**			
1.8 16V	04.98 - 02.01	124	1797	4	B18C4	**T847B**			
Civic VI Coupe (EJ, EM1)									
1.6 i	03.96 - 03.00	77	1590	4	D16Y7	**T847B**			
1.6 i Vtec	03.96 - 03.00	92	1590	4	D16Y8	**T847B**			
1.6 i Vtec	04.99 - 12.00	118	1595	4	B16A2	**T846B**			
Civic VI Fastback (MA, MB)									
1.4 i	09.94 - 01.97	66	1396	4	D14A8/D14A2	**T847B**			
1.4 i	09.95 - 02.01	55	1396	4	D14A5/D14A7	**T847B**			
1.5 16V	01.97 - 02.01	84	1493	4	D15Z8	**T847B**			
1.5 i Vtec-E	09.94 - 01.97	66	1493	4	D15Z3	**T230B**			
1.6 16V	01.97 - 02.01	85	1590	4	D16B2	**T847B**			
1.6 i	09.94 - 01.97	83	1590	4	D16Y3	**T570B**			
1.6 i Vtec	09.94 - 01.97	93	1590	4	D16Y2	**T230B**			
1.6 VTi	01.97 - 02.01	118	1595	4	B16A2	**T846B**			
1.8 16V	01.97 - 02.01	124	1797	4	B18C4	**T847B**			
Civic VI Hatchback (EJ, EK)									
1.4 i	11.95 - 02.01	55	1396	4	D14A3	**T847B**			
1.4 i S	11.95 - 02.01	66	1396	4	D14A4/D14Z2	**T847B**			
1.5 i	11.95 - 02.01	84	1493	4	D15Z6	**T847B**			
1.6 i	11.95 - 02.01	84	1590	4	D16Y5	**T847B**			
1.6 Vti	11.95 - 02.01	118	1595	4	B16A2	**T846B**			
Civic VI Sedan (EJ, EK)									
1.4	11.95 - 10.98	55	1396	4	D14A4	**T847B**			
1.4 i	11.95 - 02.01	66	1396	4	D14A4/D14Z2	**T847B**			

HONDA Civic VI Sedan (EJ, EK) ▶

model	year	kW	cm³	cyl	engine	I	II	III	info
Civic VI Sedan (EJ, EK)									
1.5 i	11.95 - 02.01	84	1493	4	D15Z6	**T847B**			
1.6 i Vtec	11.95 - 02.01	92	1590	4	D16Y6/D16Y8	**T847B**			
1.6 VTi	11.95 - 02.01	118	1595	4	B16A2	**T846B**			
Concerto (HW)									
1.4	08.89 - 10.91	66	1396	4	D14A8/D14A1	**T570B**			
1.4	10.89 - 10.92	61	1396	4	D14A1	**T570B**			
1.5 i 16V	08.89 - 03.95	66	1493	4	D15B2	**T570B**			
1.6 16V	08.89 - 03.95	78	1590	4	D16Z2	**T570B**			
1.6 i 16V	08.89 - 03.95	82	1590	4	D16Z2	**T570B**			
1.6 i 16V	08.89 - 03.95	90	1590	4	D16A8	**T572B**			
Concerto Sedan (HWW)									
1.4	08.89 - 10.91	66	1396	4	D14A8/D14A1	**T570B**			
1.4	10.89 - 10.92	61	1396	4	D14A1	**T570B**			
1.5 i 16V	08.89 - 05.95	66	1493	4	D15B2	**T570B**			
1.6 16V	08.89 - 03.95	78	1590	4	D16Z2	**T570B**			
1.6 i 16V	08.89 - 03.95	82	1590	4	D16Z2	**T570B**			
1.6 i 16V	08.89 - 03.95	90	1590	4	D16A8	**T572B**			
CR-V I (RD)									
2.0 16V	10.95 - 01.99	94	1973	4	B20B	**T985B**			
2.0 16V	01.99 - 02.02	108	1973	4	B20Z1	**T985B**			
CR-V II (RD_)									
2.0	07.02 - 09.06	110	1998	4	K20A4	**T985B**			
CRX I (AF, AS)									
1.3	10.83 - 10.87	52	1342	4	EV2	**T231B**			
1.5 i	10.83 - 11.86	74	1488	4	EW3	**T835B**			
CRX II (ED, EE)									
1.6 i 16V	10.87 - 02.92	91	1590	4	D16Z5	**T572B**	**T847B**		boot design
1.6 i 16V	10.87 - 12.89	96	1590	4	D16A8/D16A9	**T572B**			
1.6 i 16V Vtec	10.89 - 02.92	110	1595	4	B16A1	**T985B**			
CRX III (EH, EG)									
1.6 ESi	03.92 - 12.98	92	1590	4	D16Y8/D16Z6	**T847B**			
1.6 i VTi	03.92 - 12.98	118	1595	4	B16A2	**T846B**			
HR-V (GH)									
1.6 16V	03.99 -	77	1590	4	D16W1	**T847B**			
1.6 16V 4WD	03.99 -	77	1590	4	D16W1	**T847B**			
1.6 16V 4WD	10.99 -	91	1590	4	D16W5	**T847B**			
Integra Coupe (DC2, DC4)									
1.8 Type-R	11.97 - 10.01	140	1797	4	B18C6	**T846B**			
Logo (GA3)									
1.3	03.99 - 03.02	48	1343	4	D13B7	**T847B**			
Prelude IV (BB)									
2.0 i 16V	02.92 - 09.96	98	1997	4	F20A4	**T895B**			
2.2 i 16V Vtec	02.93 - 09.96	136	2157	4	H22A2	**T547B**			
2.3 i 16V	02.92 - 09.96	118	2259	4	H23A2	**T846B**			
Prelude V (BB)									
2.0 16V	10.96 - 10.00	98	1997	4	F20A4	**T895B**			
2.2 16V	10.96 - 10.00	136	2157	4	H22A5	**T547B**			
2.2 16V	10.96 - 10.00	147	2157	4	H22A5	**T547B**			
Shuttle (RA)									
2.2 16V	10.94 - 02.98	110	2156	4	F22B8	**T895B**			
2.3 16V	10.97 - 06.04	110	2254	4	F23A7	**T232B**			
2.3 16V 4x4	10.97 - 06.02	110	2254	4	F23A	**T232B**			
HYUNDAI									
Accent I (X-3)									
1.3	10.94 - 01.00	44	1341	4	G4EH	**T747B**			
1.3	10.94 - 01.00	55	1341	4	G4EH	**T747B**			
1.3 i 12V	10.94 - 01.00	62	1341	4	G4EH	**T747B**			
1.5 i 12V	10.94 - 01.00	65	1495	4	G4EK DOHC	**T523B**			DOHC
	10.94 - 01.00	65	1495	4	G4EK SOHC	**T747B**			SOHC
1.5 i 16V	12.96 - 01.00	73	1495	4	G4ER	**T523B**			Tagaz, RUS, 2001-2012
Accent II (LC)									
1.3	01.00 - 11.05	55	1341	4	G4EA	**T747B**			
1.3	01.00 - 11.05	61	1341	4	G4EA	**T747B**			
1.3	01.00 - 11.05	63	1341	4	G4EA	**T747B**			
1.3	08.02 - 11.05	62	1341	4	G4EH	**T747B**			
1.5	01.00 - 11.05	66	1495	4	G4EB	**T747B**			
1.5	09.00 - 11.05	75	1495	4	G4EC-G	**T523B**			
1.6	12.02 - 11.05	77	1599	4	G4ED-G	**T118B**			

HYUNDAI Accent III (MC) ▶

model	year	kW	cm³	cyl	engine	I	II	III	info
Accent III (MC)									
1.4 GL	11.05 - 11.10	71	1399	4	G4EE	**T523B**			
1.6 GLS	11.05 - 11.10	82	1599	4	G4ED	**T118B**			
Accent IV (RB)									
1.4	11.10 -	79	1396	4	G4FA	**T523B**			
Accent Sedan (X-3)									
1.3	10.94 - 01.00	44	1341	4	G4EH	**T747B**			
1.3	10.94 - 01.00	55	1341	4	G4EH	**T747B**			
1.3 i 12V	10.94 - 01.00	62	1341	4	G4EH	**T747B**			
1.5 i 12V	10.94 - 01.00	65	1495	4	G4EK DOHC	**T523B**			DOHC
	10.94 - 01.00	65	1495	4	G4EK SOHC	**T747B**			SOHC
1.5 i 16V	12.96 - 01.00	73	1495	4	G4ER	**T523B**			Tagaz, RUS, 2001-2012
Accent Sedan (LC)									
1.3	01.00 - 11.05	55	1341	4	G4EA	**T747B**			
1.3	01.00 - 11.05	63	1341	4	G4EA	**T747B**			
1.5	01.00 - 11.05	66	1495	4	G4EB	**T747B**			
1.6	12.02 - 11.05	77	1599	4	G4ED-G	**T118B**			
Accent Sedan (MC)									
1.4 GL	11.05 - 11.10	71	1399	4	G4EE	**T523B**			
1.6 GLS	11.05 - 11.10	82	1599	4	G4ED	**T118B**			
Atos (MX)									
1.0 i	02.98 - 08.00	40	999	4	G4HC	**T524B**			with distributor
	08.00 - 03.02	40	999	4	G4HC	**T309B**			without distributor
1.0 i	03.01 -	43	999	4	G4HC-E	**T309B**			
1.1	08.03 - 05.05	43	1086	4	G4HD	**T747B**			
1.1	03.04 -	46	1086	4	G4HG	**T747B**			
Atos Prime (MX)									
1.0 i	08.99 - 08.00	40	999	4	G4HC	**T524B**			with distributor
	08.00 -	40	999	4	G4HC	**T309B**			without distributor
1.0 i	03.01 - 04.03	43	999	4	G4HC-E	**T309B**			
	04.03 -	43	999	4	G4HC-E	**T747B**			
1.1	06.03 -	43	1086	4	G4HD	**T747B**			
1.1	09.05 -	46	1086	4	G4HG	**T747B**			
Coupe (RD)									
1.6 16V	03.98 - 06.00	85	1599	4	G4GR	**T868B**			
1.6 i 16V	12.96 - 06.00	84	1599	4	4G61	**T868B**			
2.0 16V	08.96 - 04.02	102	1975	4	G4GF	**T868B**			
2.0 16V	03.01 - 04.02	99	1975	4	G4DF	**T118B**			
Coupe (GK)									
1.6 16V	03.02 - 08.09	77	1599	4	G4ED-G	**T118B**			
1.6 16V	03.02 - 08.09	79	1599	4	G4ED-G	**T118B**			
2.0	08.01 - 08.09	100	1975	4	G4GC-G	**T118B**			
1.6 16V	03.02 - 08.09	77	1599	4	G4ED-G	**T118B**			
2.0	03.02 - 08.09	102	1975	4	G4GC-G	**T118B**			
2.0 GLS	02.03 - 08.09	105	1975	4	G4GC-G	**T118B**			
2.7 V6	03.02 - 08.09	123	2656	6	G6BA-G	**T117B**			
Elantra (XD)									
1.6	06.00 - 07.06	66	1599	4	G4GR	**T118B**			
1.6	06.00 - 07.06	79	1599	4	G4ED-G	**T523B**			
1.6	05.03 - 07.06	77	1599	4	G4ED-G	**T118B**			Tagaz, RUS, 2008-2011
1.8	06.00 - 07.06	97	1795	4	G4BB	**T118B**			
2.0	06.00 - 07.06	102	1975	4	G4GC-G	**T118B**			
2.0	06.00 - 07.06	104	1975	4	G4GC	**T118B**			
2.0	10.03 - 07.06	105	1975	4	G4GC	**T118B**			
Elantra Sedan (XD)									
1.6	06.00 - 07.06	66	1599	4	G4GR	**T118B**			
1.6	06.00 - 07.06	79	1599	4	G4ED-G	**T523B**			
1.6	05.03 - 07.06	77	1599	4	G4ED-G	**T118B**			
1.8	06.00 - 07.06	97	1795	4	G4BB	**T118B**			
2.0	06.00 - 07.06	102	1975	4	G4GC-G	**T118B**			
2.0	06.00 - 07.06	104	1975	4	G4GC	**T118B**			
2.0	10.03 - 07.06	105	1975	4	G4GC	**T118B**			
Equus/Centennial									
3.5	10.99 - 03.09	155	3497	6	G6CU	**T238P**			semidirect
Galloper II (JK-01)									
3.0 V6	08.98 - 12.03	104	2972	6	G6AT	**T119B**			
Getz (TB)									
1.1	09.02 - 09.05	46	1086	4	G4HD	**T309B**			
1.1	09.05 - 06.09	49	1086	4	G4HD	**T747B**			
1.3	09.03 - 09.05	63	1341	4	G4EA	**T747B**			
1.3 i	09.02 - 03.04	60	1341	4	G4EA	**T747B**			

HYUNDAI Getz (TB) ▶

model	year	kW	cm³	cyl	engine	I	II	III	info
Getz (TB)									
1.4 i	08.05 - 06.09	71	1399	4	G4EE	**T523B**			
1.6	09.02 - 09.05	77	1599	4	G4ED-G	**T523B**			
1.6	08.05 - 06.09	78	1599	4	G4ED-G	**T523B**			
H-1 / Starex									
2.4	06.97 - 07.01	82	2351	4	G4CS	**T799B**			with distributor
	08.01 - 04.04	82	2351	4	G4CS	**T745B**			semidirect
2.4	06.01 - 04.04	99	2351	4	G4JS	**T745B**			semidirect
2.4 4WD	02.98 - 07.01	82	2351	4	G4CS	**T799B**			with distributor
	08.01 - 04.04	82	2351	4	G4CS	**T745B**			semidirect
H-1 Van									
2.4	03.00 - 04.04	82	2351	4	G4CS	**T308B**			
H100 Bus, H100 Van									
2.4	01.97 - 03.00	84	2351	4	G4CS	**T308B**			
2.4	07.93 - 03.00	90	2351	4	G4CS	**T308B**			
i10 (PA)									
1.1	04.11 -	51	1086	4	G4HG	**T309B**			
1.1	01.08 -	49	1086	4	G4HG	**T309B**			
1.2	11.08 -	57	1248	4	G4LA	**T350B**			
1.2	04.11 -	63	1248	4	G4LA	**T350B**			
i10 (IA)									
1.2	12.13 -	64	1248	4	G4LA	**T350B**			
i20 (PB, PBT)									
1.2	09.08 -	57	1248	4	G4LA	**T350B**			
i20 (GB)									
1.2	11.14 -	55	1248	4	G4LA	**T350B**			without start/stop system
1.2	11.14 -	62	1248	4	G4LA	**T350B**			without start/stop system
i30 (FD)									
2.0	10.07 - 11.11	105	1975	4	G4GC-G/G4GC	**T118B**			
Lantra I (J-1)									
1.5 i.e.	10.90 - 11.95	63	1468	4	G15B/G4DJ	**T837B**			
1.6 i.e. 16V	10.90 - 11.95	78	1596	4	G4CR	**T902B**			
1.6 i.e. 16V	10.90 - 11.95	84	1596	4	G4CR	**T902B**			
1.8 i.e. 16V	10.90 - 11.95	93	1836	4	G4CN	**T902B**			
Lantra II (J-2)									
1.5 12V	12.96 - 09.00	65	1495	4	G4EK	**T747B**			
1.6 16V	11.95 - 09.00	84	1599	4	4G61	**T868B**			
1.6 i	11.95 - 09.00	66	1599	4	G4GR	**T868B**			
1.8 16V	11.95 - 09.00	94	1795	4	G4GM	**T868B**			
2.0 16V	08.96 - 09.00	102	1975	4	G4GF	**T868B**			
Lantra II Wagon (J-2)									
1.5 12V	04.97 - 10.00	65	1495	4	G4EK	**T747B**			
1.6 16V	02.96 - 10.00	84	1599	4	4G61	**T868B**			
1.6 i	02.96 - 10.00	66	1599	4	G4GR	**T868B**			
1.8 16V	02.96 - 10.00	94	1795	4	G4GM	**T868B**			
2.0 16V	12.96 - 10.00	102	1975	4	G4GF	**T868B**			
Matrix (FC)									
1.6	06.01 - 08.10	76	1599	4	G4ED-G	**T523B**			
1.8	06.01 - 08.10	90	1795	4	G4GB-G	**T118B**			
Pony, Pony Sedan									
1.3	10.85 - 09.89	50	1299	4	G13B	**T479B**			
1.5	10.85 - 09.89	53	1468	4	G15B/G4DJ	**T479B**			
Pony (X-2)									
1.3	10.89 - 01.95	43	1299	4	G4DG	**T837B**			
1.3	10.89 - 01.95	49	1299	4	G4DG	**T837B**			
1.5	10.89 - 01.95	53	1468	4	G15B	**T837B**			engine code
	10.89 - 01.95	53	1468	4	G4DJ	**T838B**			engine code
1.5 i	10.89 - 01.95	61	1468	4	G15B	**T837B**			engine code
	10.89 - 01.95	61	1468	4	G4DJ	**T838B**			engine code
1.5 i	10.89 - 01.95	62	1468	4	G15B	**T837B**			engine code
	10.89 - 01.95	62	1468	4	G4DJ	**T838B**			engine code
Pony / Excel Sedan (X-2)									
1.3	01.90 - 01.95	49	1299	4	G4DG	**T837B**			
1.5	01.90 - 01.95	53	1468	4	G15B	**T837B**			engine code
	01.90 - 01.95	53	1468	4	G4DJ	**T838B**			engine code
1.5 i	01.90 - 01.95	61	1468	4	G15B	**T837B**			engine code
	01.90 - 01.95	61	1468	4	G4DJ	**T838B**			engine code
1.5 i	01.90 - 01.95	62	1468	4	G15B	**T837B**			engine code
	01.90 - 01.95	62	1468	4	G4DJ	**T838B**			engine code
S Coupe (SLC)									
1.5 i	02.90 - 05.96	62	1468	4	G15B/G4DJ	**T837B**			

HYUNDAI S Coupe (SLC) ▶

model	year	kW	cm³	cyl	engine	I	II	III	info
S Coupe (SLC)									
1.5 i	04.92 - 05.96	65	1495	4	G4EK	**T837B**			
1.5 i Turbo	04.91 - 05.96	85	1495	4	G4EK-TC	**T837B**			
Santa Fé I (SM)									
2.0	08.01 - 03.06	99	1997	4	G4BP	**T745B**			semidirect
2.4 16V	02.01 - 03.06	100	2351	4	G4JS-G	**T745B**			semidirect
2.4 16V	02.01 - 03.06	107	2351	4	G4JS-G	**T745B**			semidirect
2.4 16V 4x4	02.01 - 03.06	100	2351	4	G4JS-G	**T745B**			semidirect
2.4 16V 4x4	02.01 - 03.06	107	2351	4	G4JS-G	**T745B**			semidirect
2.7 V6 4x4	02.01 - 03.06	127	2656	6	G6BA-G	**T117B**			Tagaz, RUS, 2007-2011
Santamo									
2.0 16V	05.99 -	102	1997	4		**T902B**			
2.0 16V 4x4	05.99 -	102	1997	4	G4CP	**T902B**			
Sonata II (Y-2)									
2.0 i	01.91 - 10.93	80	1997	4	G4CP-U	**T902B**			
2.0 i 16V	01.91 - 10.93	96	1997	4	G4CP-D	**T902B**			
2.4 i	09.88 - 08.91	83	2351	4	G4CS	**T799B**			
3.0 i V6	01.91 - 10.93	107	2972	6	G6AT	**T120B**			
Sonata III (Y-3)									
1.8 i	05.93 - 06.98	72	1796	4	G4CM	**T799B**			
2.0 i	06.94 - 08.96	77	1997	4	G4CP	**T799B**			
2.0 i	08.96 - 06.98	70	1997	4		**T799B**			
2.0 i 16V	05.93 - 06.98	102	1997	4	G4CP-D	**T902B**			
2.0 i 16V	06.96 - 06.98	92	1997	4	G4CP-DM	**T902B**			
3.0 i V6	05.93 - 06.98	107	2972	6	G6AT	**T120B**			
Sonata IV (EF)									
2.0 16V	06.98 - 10.01	100	1997	4	G4JP-G	**T745B**			semidirect
2.0 16V	10.01 - 11.04	96	1997	4	G4JP-EG	**T745B**			semidirect
2.4 16V	03.98 - 10.01	105	2351	4	G4BS	**T745B**			semidirect
2.5 V6 24V	06.98 - 10.01	118	2493	6	G6BV-G	**T117B**			
2.7 V6	10.01 - 11.04	127	2656	6	G6BA-G	**T117B**			Tagaz, RUS, 2007-2011
Sonata V (NF)									
2.0 16V Beta	04.04 -	102	1998	4	G4GC	**T868B**			Tagaz, RUS, 2004-2011
Terracan (HP)									
3.5 i V6 4WD	12.01 - 12.06	143	3497	6	G6CU	**T238P**			semidirect
Trajet (FO)									
2.0	03.00 - 02.04	100	1997	4	G4JP-G	**T118B**			DIN
	02.04 - 07.08	100	1997	4	G4JP-G	**T745B**			semidirect
2.0	01.04 - 02.04	103	1975	4	G4GC-G	**T118B**			DIN
	02.04 - 07.08	103	1975	4	G4GC-G	**T745B**			semidirect
2.7 V6	09.00 - 07.08	127	2656	6	G6BA-G	**T117B**			
Tucson (JM)									
2.0	08.04 - 03.10	104	1975	4	G4GC	**T118B**			DIN
	08.04 - 03.10	104	1975	4	G4GC	**T745B**			semidirect
2.0 Allrad	08.04 - 03.10	104	1975	4	G4GC	**T118B**			DIN
	08.04 - 03.10	104	1975	4	G4GC	**T745B**			semidirect
2.7 Allrad	08.04 - 03.10	129	2656	6	G6BA-G	**T117B**			
XG (XG)									
25	12.98 -	120	2493	6	G6AV	**T117B**			
30/300	12.98 -	138	2972	6	G6CT-G	**T238P**			semidirect
300	12.98 - 09.03	145	2972	6	G6CT	**T238P**			semidirect
350	04.03 -	145	3497	6	G6CU	**T238P**			semidirect
INFINITI									
G20									
2.0	01.90 - 12.97	85	1998	4	SR20DE	**T999B**			
IZH									
412 Moskvitch									
1.5	67 - 01.82	55	1478	4	UZAM 412	**T635S**	**T634H**		premium / basic
412-028 Moskvitch									
1.5	01.82 - 01.98	53	1479	4	UZAM 331.10	**T635S**	**T634H**		premium / basic
1500 Combi									
1.5	06.73 - 01.82	55	1478	4	UZAM 412	**T635S**	**T634H**		premium / basic
2125									
1.5	06.73 - 01.97	55	1478	4	UZAM 412	**T635S**	**T634H**		premium / basic
21251									
1.5	01.82 - 01.97	53	1479	4	UZAM 331.10	**T635S**	**T634H**		premium / basic
2126									
1.5	11.90 - 12.99	53	1479	4	UZAM 331.10	**T635S**	**T634H**		premium / basic
1.6	01.97 - 12.99	56	1568	4	VAZ 2106	**T355S**	**T134H**	**T412M**	premium / basic / inductive

IZH 2126 ▶

model	year	kW	cm³	cyl	engine	I	II	III	info
2126									
1.7	01.95 - 12.99	63	1699	4	UZAM 3317.10	**T357S**	**T136H**	**T414M**	premium / basic / inductive
2126 Oda									
1.6	01.00 - 07.05	56	1568	4	VAZ 2106	**T355S**	**T134H**	**T412M**	premium / basic / inductive
1.7	01.00 - 07.05	63	1699	4	UZAM 3317.10	**T357S**	**T136H**	**T414M**	premium / basic / inductive
21261 Fabula									
1.6	06.04 - 01.06	56	1568	4	VAZ 2106	**T355S**	**T134H**	**T412M**	premium / basic / inductive
1.7	06.04 - 01.06	63	1700	4	UZAM 3317.10	**T357S**	**T136H**	**T414M**	premium / basic / inductive
2715									
1.5	11.72 - 01.82	55	1478	4	UZAM 412	**T635S**	**T634H**		premium / basic
27151									
1.5	01.74 - 01.82	55	1478	4	UZAM 412	**T635S**	**T634H**		premium / basic
27151-01									
1.5	01.82 - 01.97	53	1479	4	UZAM 331.10	**T635S**	**T634H**		premium / basic
27156									
1.5	88 - 01	53	1479	4	UZAM 331.10	**T635S**	**T634H**		premium / basic
2717									
1.6	01.97 - 07.05	56	1568	4	VAZ 2106	**T355S**	**T134H**	**T412M**	premium / basic / inductive
1.7	01.97 - 07.05	63	1700	4	UZAM 3317.10	**T357S**	**T136H**	**T414M**	premium / basic / inductive
27171									
1.6	01.98 - 01.04	56	1568	4	VAZ 2106	**T355S**	**T134H**	**T412M**	premium / basic / inductive
1.7	01.98 - 01.04	63	1700	4	UZAM 3317.10	**T357S**	**T136H**	**T414M**	premium / basic / inductive
27175									
1.6 carb	12.05 - 09.12	56	1570	4	VAZ 2106	**T355S**	**T134H**	**T412M**	premium / basic / inductive
JEEP									
Grand Cherokee I (ZJ)									
4.0 i (Z)	10.95 - 04.99	130	3960	6	S01	**T191B**			
4.0 i (ZJ)	09.91 - 04.99	132	3964	6	ERH	**T191B**			
4.0 i (ZJ)	09.91 - 04.99	135	3964	6	MX	**T191B**			
4.0 Laredo	10.96 - 09.98	131	3964	6	ERH	**T191B**			
5.2	10.96 - 09.98	164	5210	8	ELF	**T202B**			
5.2 (Z)	10.95 - 04.99	156	5216	8	Y01	**T202B**			
5.2 4WD	10.96 - 09.98	164	5210	8	ELF	**T202B**			
5.2 i (ZJ)	01.92 - 04.99	155	5210	8	ELF	**T202B**			
5.2 i (ZJ)	09.92 - 04.99	158	5210	8	Y	**T202B**			
5.2 Limited 4x4	10.96 - 09.98	136	5210	8	ELF	**T202B**			
5.9 i	08.97 - 04.99	177	5901	8		**T202B**			
Cherokee (KJ)									
2.4 4WD	09.01 - 01.08	108	2429	4	ED1	**T189B**			
Cherokee (XJ)									
2.5	10.90 - 09.96	89	2464	4	EPE	**T432B**			
2.5	10.95 - 09.01	89	2469	4	EPE	**T432B**			
2.5 i	11.96 - 09.01	87	2464	4	EPE	**T433B**			
2.5 i 4x4	12.91 - 09.01	90	2469	4	EPE/HX	**T432B**			
2.5 SE	10.96 - 09.99	87	2464	4	EPE	**T433B**			
4.0 i	12.91 - 09.01	135	3964	6	MX	**T191B**			
4.0 i	01.88 - 09.01	136	3964	6	ERH	**T191B**			
4.0 i	01.95 - 09.01	131	3964	6	ERH	**T191B**			
4.0 i	07.98 - 09.01	127	3960	6		**T191B**			
4.0 i	02.99 - 09.01	135	3960	6	MX	**T191B**			
Wrangler I (YJ, SJ_)									
2.5	12.91 - 08.96	89	2464	4	EPE	**T432B**			
4.0	12.91 - 08.96	131	3964	6	ERH	**T191B**			
Wrangler II (TJ)									
2.5	08.96 - 04.07	87	2464	4	P00	**T432B**			
3.8	02.06 - 12.08	153	3778	6	EGT	**T477B**			
4.0	08.96 - 04.07	130	3960	6	S01	**T191B**			
4.0	06.98 - 04.07	124	3960	6		**T191B**			
Wrangler III (JK)									
3.8	04.07 -	146	3778	6	EGT	**T477B**			
KIA									
Avella, Avella CC									
1.3	11.95 - 12.01	55	1324	4	B3	**T896B**			
1.5	02.97 - 12.01	55	1498	4		**T896B**			
Carens I (FC)									
1.8 i	11.00 - 07.02	81	1793	4	T8	**T508B**			semidirect
Carens II (FJ)									
1.6	07.02 -	77	1594	4	GA6D	**T236B**			
1.8	07.02 -	93	1793	4		**T508B**			semidirect

KIA Carens II (FJ) ▶

model	year	kW	cm³	cyl	engine	I	II	III	info
Carens II (FJ)									
2.0 CVVT	08.04 -	102	1975	4	G4GC	**T118B**			
Carnival I (UP)									
2.5 V6	08.99 - 10.01	121	2497	6	KRV6	**T237B**			
Carnival II (GQ)									
2.5 V6	10.01 -	110	2497	6	K5	**T237B**			
3.5	07.02 -	143	3497	6	G6CU	**T238P**			semidirect
Cee'd CC (ED)									
2.0	12.06 -	105	1975	4	G4GC	**T118B**			
Cee'd SW (ED)									
2.0	09.07 -	105	1975	4	G4GC	**T118B**			
Cerato (LD)									
1.6	07.04 -	77	1599	4	G4ED	**T118B**			
2.0	04.04 -	105	1975	4	G4GC	**T118B**			
Cerato Sedan (LD)									
1.6	04.04 -	77	1599	4	G4ED	**T118B**			
2.0	04.04 -	105	1975	4	G4GC	**T118B**			
Clarus (K9A)									
1.8 i 16V	07.96 -	85	1793	4	T8	**T508B**			semidirect
2.0 i 16V	07.96 -	98	1998	4	FE (16 V)	**T509B**			
Clarus Combi (GC)									
1.8 i 16V	05.98 -	85	1793	4	T8	**T508B**			semidirect
2.0 i 16V	05.98 -	98	1998	4	FE (16 V)	**T509B**			
Joice									
2.0	02.00 -	102	1997	4	G4CP	**T902B**			
2.0	09.01 -	88	1997	4		**T902B**			
Magentis (GD)									
2.0	05.01 -	100	1997	4	G4JP	**T745B**			semidirect
2.5 V6	05.01 -	124	2493	6	G6BV	**T117B**			
Opirus (GH)									
3.5	09.03 -	149	3497	6	G6CU	**T186B**			semidirect
Picanto (BA)									
1.0	09.05 -	45	999	4	G4HE	**T747B**			
1.0	11.09 -	46	999	4	G4HE	**T309B**			
1.1	04.04 -	48	1086	4	G4HG	**T747B**			
Picanto (TA)									
1.2	10.11 -	63	1248	4	G4LA	**T350B**			without start/stop system
Pride (DA)									
1.1 i	01.91 -	38	1138	4	B1	**T795B**			
1.3 16V	01.90 -	44	1324	4	B3	**T795B**			
1.3 16V	01.90 -	53	1324	4	B3	**T795B**			
1.3 16V	10.96 -	47	1324	4	B3	**T795B**			
1.3 i	01.90 -	51	1324	4		**T795B**			
Pride Combi									
1.3	08.99 -	47	1324	4		**T795B**			
Rio (DC_)									
1.3	09.00 - 02.05	55	1343	4	A3E	**T527B**			
1.3	08.02 - 02.05	60	1343	4	A3E	**T527B**			
1.5 16V	09.00 - 02.05	72	1493	4	A5D	**T236B**			
1.5 16V	09.02 - 02.05	71	1493	4	A5D	**T523B**			
Rio Combi (DC)									
1.3	08.00 - 02.05	55	1343	4	A3E	**T527B**			
1.3	08.00 - 02.05	60	1343	4	A3E	**T527B**			
1.5 16V	08.00 - 02.05	72	1493	4	A5D	**T236B**			
1.5 16V	09.02 - 02.05	71	1493	4	A5D	**T236B**			
Rio II (JB)									
1.4 16V	03.05 -	71	1399	4	G4EE	**T523B**			
1.6 CVVT	03.05 -	82	1599	4	G4ED	**T523B**			
Rio II Sedan (JB)									
1.4 16V	03.05 -	71	1399	4	G4EE	**T523B**			
1.6 16V	03.05 -	82	1599	4	G4ED	**T523B**			
Rio III (UB)									
1.25 CVVT	09.11 -	63	1248	4	G4LA	**T350B**			without start/stop system
1.25 LPG	09.11 -	63	1248	4	G4LA	**T350B**			without start/stop system
Rio III Sedan (UB)									
1.25 CVVT	10.11 -	63	1248	4	G4LA	**T350B**			without start/stop system
Sephia (FA)									
1.5 i	02.96 - 10.97	59	1498	4	B5	**T508B**			semidirect
	02.96 - 10.97	59	1498	4	B5	**T796B**			DIN with distributor
1.6 i	01.95 - 10.97	59	1598	4	B6	**T508B**			semidirect
	01.95 - 10.97	59	1598	4	B6	**T796B**			DIN with distributor

KIA Sephia (FA) ▶

model	year	kW	cm³	cyl	engine	I	II	III	info
Sephia (FA)									
1.8 i 16V	01.95 - 10.97	82	1793	4	OK24N/OK26Y	**T508B**			semidirect
Sephia Sedan (FA)									
1.5 i	02.96 - 10.97	59	1498	4	B5	**T508B**			semidirect
	02.96 - 10.97	59	1498	4	B5	**T796B**			DIN with distributor
1.6 i	09.93 - 10.97	59	1598	4	B6	**T796B**			
1.8 i 16V	01.95 - 10.97	82	1793	4	OK24N/OK26Y	**T508B**			semidirect
Shuma (FB)									
1.5 i 16V	10.97 - 03.01	65	1498	4		**T508B**			semidirect
1.8 i 16V	10.97 - 03.01	81	1793	4	T8	**T508B**			semidirect
Shuma Sedan (FB)									
1.5	03.96 - 12.98	59	1498	4	OK280	**T508B**			semidirect
1.5 i 16V	10.97 - 10.01	65	1498	4		**T508B**			semidirect
1.8 GX	05.99 - 10.01	85	1798	4		**T508B**			semidirect
Shuma II (FB)									
1.6	05.01 - 08.04	75	1594	4	GA6D	**T236B**			
1.8	04.03 - 08.04	84	1793	4	T8	**T508B**			semidirect
Shuma II Sedan (FB)									
1.6	05.01 - 05.04	75	1594	4	GA6D	**T236B**			
Sorento I (JC)									
2.4	08.02 -	102	2351	4	G4JS	**T745B**			semidirect
3.5 V6	08.02 -	143	3497	6	G6CU	**T537P**			semidirect
Spectra									
1.5 i 16V	99 - 03	65	1498	4		**T508B**			
1.6 RUS	05.08 -	75	1594	4	S6D (DOHC)	**T236B**			IZHavto, RUS
1.8 i 16V	01 - 08.04	84	1793	4		**T508B**			
Sportage (K00)									
2.0, 2.0 4WD	10.00 - 08.03	87	1998	4		**T108B**			semidirect
2.0 i 16V	10.99 - 08.03	94	1998	4	FE (16 V)	**T108B**			
	10.99 - 08.03	94	1998	4	FE (16 V)	**T797B**			
2.0 i 16V 4WD	04.94 - 08.03	94	1998	4	FE (16 V)	**T108B**			semidirect
	04.94 - 08.03	94	1998	4	FE (16 V)	**T797B**			PIN
2.0 i 4WD	04.94 - 08.99	70	1998	4	FE	**T797B**			
Sportage (JE_)									
2.0 16V 4WD	09.04 -	104	1975	4	G4GC	**T118B**			DIN
	09.04 -	104	1975	4	G4GC	**T745B**			semidirect
2.0 i 16V	09.04 -	104	1975	4	G4GC	**T118B**			DIN
	09.04 -	104	1975	4	G4GC	**T745B**			semidirect
2.7 V6 4WD	09.04 -	129	2656	6	G6BA	**T117B**			
LADA (VAZ)									
Chevrolet Niva									
1.7i 8V MPI	09.02 -	59	1690	4	VAZ 2123i	**T867S**	**T771H**	**T517M**	premium / basic / inductive
Granta Sedan (VAZ 2190)									
1.6i 8V	10.11 -	60	1596	4	VAZ 11183	**T395S**	**T684H**	**T514M**	premium / basic / inductive
1.6i 8V	10.11 -	64	1596	4	VAZ 11186	**T395S**	**T684H**	**T514M**	premium / basic / inductive
1.6i 8V	07.13 -	66	1596	4	VAZ 21116	**T395S**	**T684H**	**T514M**	premium / basic / inductive
Granta Liftback (VAZ 2191)									
1.6i 8V	05.14 -	64	1596	4	VAZ 11186	**T395S**	**T684H**	**T514M**	premium / basic / inductive
1.6i 8V	05.14 -	66	1596	4	VAZ 21116	**T395S**	**T684H**	**T514M**	premium / basic / inductive
Kalina Combi (VAZ 1117)									
1.6i 8V	09.07 - 08.13	58	1596	4	VAZ 11183	**T395S**	**T684H**	**T514M**	premium / basic / inductive
1.6i 8V	09.07 - 08.13	60	1596	4	VAZ 21114	**T395S**	**T684H**	**T514M**	premium / basic / inductive
Kalina Hatchback (VAZ 1119)									
1.6i 8V	12.06 - 02.13	58	1596	4	VAZ 11183	**T395S**	**T684H**	**T514M**	premium / basic / inductive
1.6i 8V	12.06 - 02.13	60	1596	4	VAZ 21114	**T395S**	**T684H**	**T514M**	premium / basic / inductive
Kalina Sedan (VAZ 1118)									
1.6i 8V	11.04 - 11.13	58	1596	4	VAZ 11183	**T395S**	**T684H**	**T514M**	premium / basic / inductive
1.6i 8V	11.04 - 11.13	60	1596	4	VAZ 21114	**T395S**	**T684H**	**T514M**	premium / basic / inductive
Kalina 2 Combi (VAZ 2194)									
1.6i 8V	09.13 -	64	1596	4	VAZ 11186	**T395S**	**T684H**	**T514M**	premium / basic / inductive
Kalina 2 Hatchback (VAZ 2192)									
1.6i 8V	05.13 - 08.13	58	1596	4	VAZ 11183-50	**T395S**	**T684H**	**T514M**	premium / basic / inductive
1.6i 8V	05.13 -	64	1596	4	VAZ 11186	**T395S**	**T684H**	**T514M**	premium / basic / inductive
Kalina Cross									
1.6i 8V	09.14 -	64	1596	4	VAZ 11186	**T395S**	**T684H**	**T514M**	premium / basic / inductive
Lada 110 (VAZ 2110)									
1.5 carb	06.95 - 10.00	54	1500	4	VAZ 2110	**T356S**	**T135H**	**T413M**	premium / basic / inductive
1.5i 8V	06.95 - 10.07	57	1499	4	VAZ 2111	**T395S**	**T684H**	**T514M**	premium / basic / inductive
1.5i 16V	06.95 - 10.07	66	1499	4	VAZ 2112	**T774S**	**T859H**	**T516M**	premium / basic / inductive
1.6i 8V	01.00 - 10.07	60	1596	4	VAZ 21114	**T395S**	**T684H**	**T514M**	premium / basic / inductive

LADA (VAZ) 110 (VAZ 2110) ▶

model	year	kW	cm³	cyl	engine	I	II	III	info
Lada 110 (VAZ 2110)									
1.6i 8V LPG	10.04 - 03.07	60	1596	4	VAZ 21114	**T395S**	**T684H**	**T514M**	premium / basic / inductive
Lada 111 (VAZ 2111)									
1.5	06.98 - 10.00	54	1500	4	VAZ 2110	**T356S**	**T135H**	**T413M**	premium / basic / inductive
1.5i 8V	06.98 - 02.09	57	1499	4	VAZ 2111	**T395S**	**T684H**	**T514M**	premium / basic / inductive
1.5i 16V	06.98 - 02.09	66	1499	4	VAZ 2112	**T774S**	**T859H**	**T516M**	premium / basic / inductive
1.6i 8V	06.98 - 02.09	60	1596	4	VAZ 21114	**T395S**	**T684H**	**T514M**	premium / basic / inductive
Lada 112 (VAZ 2112)									
1.5i 8V	06.99 - 02.09	57	1499	4	VAZ 2111	**T395S**	**T684H**	**T514M**	premium / basic / inductive
1.5i 16V	06.99 - 02.09	66	1499	4	VAZ 2112	**T774S**	**T859H**	**T516M**	premium / basic / inductive
1.6i 8V	06.99 - 02.09	60	1596	4	VAZ 21114	**T395S**	**T684H**	**T514M**	premium / basic / inductive
Lada 2104 (VAZ 2104)									
1.2	07.84 - 88	43	1200	4	VAZ 2101	**T355S**	**T134H**	**T412M**	premium / basic / inductive
1.3	07.84 - 89	50	1300	4	VAZ 2105	**T355S**	**T134H**	**T412M**	premium / basic / inductive
1.5	07.84 - 09.12	52	1500	4	VAZ 2103	**T355S**	**T134H**	**T412M**	premium / basic / inductive
1.7i 8V MPI	02 - 09.12	59	1690	4	VAZ 21073	**T867S**	**T771H**	**T517M**	premium / basic / inductive
Lada 2105 (VAZ 2105)									
1.2	01.80 - 12.10	43	1200	4	VAZ 2101	**T355S**	**T134H**	**T412M**	premium / basic / inductive
1.3	01.80 - 12.10	50	1300	4	VAZ 2105	**T355S**	**T134H**	**T412M**	premium / basic / inductive
1.5	01.80 - 12.10	52	1500	4	VAZ 2103	**T355S**	**T134H**	**T412M**	premium / basic / inductive
Lada 2106 (VAZ 2106)									
1.3	76 - 12.06	47	1300	4	VAZ 21011	**T355S**	**T134H**	**T412M**	premium / basic / inductive
1.5	76 - 12.06	52	1500	4	VAZ 2103	**T355S**	**T134H**	**T412M**	premium / basic / inductive
1.6	76 - 12.06	56	1600	4	VAZ 2106	**T355S**	**T134H**	**T412M**	premium / basic / inductive
Lada 2107 (VAZ 2107)									
1.3	03.82 - 04.12	47	1300	4	VAZ 21011	**T355S**	**T134H**	**T412M**	premium / basic / inductive
1.5	03.82 - 04.12	52	1500	4	VAZ 2103	**T355S**	**T134H**	**T412M**	premium / basic / inductive
1.6	03.82 - 04.12	56	1600	4	VAZ 2106	**T355S**	**T134H**	**T412M**	premium / basic / inductive
1.7i 8V MPI	02 - 04.12	59	1690	4	VAZ 21073	**T867S**	**T771H**	**T517M**	premium / basic / inductive
Lada 4x4 3D									
1.7i 8V MPI	01.03 -	60	1690	4	VAZ 21214	**T867S**	**T771H**	**T517M**	premium / basic / inductive
1.7 LPG	01.03 -	57	1690	4	VAZ 21214	**T867S**	**T771H**	**T517M**	premium / basic / inductive
1.8	01.03 -	60	1774	4	VAZ 2130	**T418S**	**T419H**	**T420M**	premium / basic / inductive
Lada 4x4 5D									
1.7i 8V MPI	01.03 -	60	1690	4	VAZ 21214	**T867S**	**T771H**	**T517M**	premium / basic / inductive
Lada 4x4 M									
1.7i 8V MPI	01.12 -	60	1690	4	VAZ 21214	**T867S**	**T771H**	**T517M**	premium / basic / inductive
Lada 4x4 Urban									
1.7i 8V MPI	10.14 -	60	1690	4	VAZ 21214	**T867S**	**T771H**	**T517M**	premium / basic / inductive
Largus Combi (R90)									
1.6 8V	07.12 - 10.15	62	1598	4	K7M	**T930B**	**T910H**	**T528M**	premium / basic / inductive
1.6i 8V	11.15 -	64	1596	4	VAZ 11189	**T395S**	**T684H**	**T514M**	premium / basic / inductive
Largus Furgon (F90)									
1.6 8V	07.12 - 10.15	62	1598	4	K7M	**T930B**	**T910H**	**T528M**	premium / basic / inductive
1.6i 8V	11.15 -	64	1596	4	VAZ 11189	**T395S**	**T684H**	**T514M**	premium / basic / inductive
Nadezhda (VAZ 2120)									
1.7i 8V SPI	12.97 - 99	59	1690	4	VAZ 21214	**T394S**	**T513M**		premium / inductive
1.7i 8V MPI	99 - 08.06	59	1690	4	VAZ 21214	**T867S**	**T771H**	**T517M**	premium / basic / inductive
1.8 carb	12.97 - 08.06	60	1774	4	VAZ 2130	**T418S**	**T419H**	**T420M**	premium / basic / inductive
Niva (VAZ 2121, VAZ 21213, VAZ 21214)									
1.6	04.77 - 94	53	1570	4	VAZ 2121	**T359S**	**T340H**	**T416M**	premium / basic / inductive
1.7	94 - 98	56	1690	4	VAZ 21213	**T418S**	**T419H**	**T420M**	premium / basic / inductive
1.7i 8V SPI	97 - 99	58	1690	4	VAZ 21214	**T394S**	**T513M**		premium / inductive
1.7i 8V MPI	99 - 12.02	60	1690	4	VAZ 21214	**T867S**	**T771H**	**T517M**	premium / basic / inductive
1.7 LPG	09.02 - 12.02	57	1690	4	VAZ 21214	**T867S**	**T771H**	**T517M**	premium / basic / inductive
1.8	01 - 12.02	60	1774	4	VAZ 2130	**T418S**	**T419H**	**T420M**	premium / basic / inductive
Niva 2 (VAZ 2123)									
1.7i 8V MPI	00 - 09.02	60	1690	4	VAZ 2123	**T867S**	**T771H**	**T517M**	premium / basic / inductive
1.7 8V MPI	09.02 -	60	1690	4	VAZ 21214	**T867S**	**T771H**	**T517M**	premium / basic / inductive
Niva (VAZ 2131)									
1.7i 8V SPI	97 - 99	58	1690	4	VAZ 21214	**T394S**	**T513M**		premium / inductive
1.7i 8V MPI	99 - 12.02	60	1690	4	VAZ 21214	**T867S**	**T771H**	**T517M**	premium / basic / inductive
1.8	01 - 12.02	60	1774	4	VAZ 2130	**T418S**	**T419H**	**T420M**	premium / basic / inductive
Niva Pick Up (VAZ 2329)									
1.7i 8V MPI	00 -	60	1690	4	VAZ 21214	**T867S**	**T771H**	**T517M**	premium / basic / inductive
1.8	01 -	60	1774	4	VAZ 2130	**T418S**	**T419H**	**T420M**	premium / basic / inductive
Oka (VAZ 1111)									
0.65	02.88 - 12.96	22	650	2	VAZ 1111	**T627S**	**T403H**	**T704M**	premium / basic / inductive
0.75	02.88 - 11.08	25	750	2	VAZ 11113	**T627S**	**T403H**	**T704M**	premium / basic / inductive
Priora Sedan (VAZ 2170)									
1.6i 8V	03.07 - 11.11	60	1596	4	VAZ 21114	**T395S**	**T684H**	**T514M**	premium / basic / inductive

LADA (VAZ) Priora Sedan (VAZ 2170) ▶

model	year	kW	cm³	cyl	engine	I	II	III	info
Priora Sedan (VAZ 2170)									
1.6i 8V	12.11 -	66	1596	4	VAZ 21116	**T395S**	**T684H**	**T514M**	premium / basic / inductive
Priora Hatchback (VAZ 2172)									
1.6i 8V	02.08 - 11.11	60	1596	4	VAZ 21114	**T395S**	**T684H**	**T514M**	premium / basic / inductive
1.6i 8V	03.07 - 08.14	66	1596	4	VAZ 21116	**T395S**	**T684H**	**T514M**	premium / basic / inductive
Samara (VAZ 2108, 21083)									
1.1	12.84 - 98	40	1100	4	VAZ 21081	**T356S**	**T135H**	**T413M**	premium / basic / inductive
1.3	12.84 - 98	49	1289	4	VAZ 2108	**T356S**	**T135H**	**T413M**	premium / basic / inductive
1.5	88 - 02	51	1500	4	VAZ 21083	**T356S**	**T135H**	**T413M**	premium / basic / inductive
1.5i 8V	93 - 02	57	1499	4	VAZ 2111	**T395S**	**T684H**	**T514M**	premium / basic / inductive
Samara (VAZ 2109, 21093)									
1.1	87 - 97	40	1100	4	VAZ 21081	**T356S**	**T135H**	**T413M**	premium / basic / inductive
1.3	87 - 97	49	1289	4	VAZ 2108	**T356S**	**T135H**	**T413M**	premium / basic / inductive
1.5	88 - 04	51	1500	4	VAZ 21083	**T356S**	**T135H**	**T413M**	premium / basic / inductive
1.5i 8V	94 - 04	57	1499	4	VAZ 2111	**T395S**	**T684H**	**T514M**	premium / basic / inductive
Samara (VAZ 21099)									
1.3	12.90 - 99	49	1289	4	VAZ 2108	**T356S**	**T135H**	**T413M**	premium / basic / inductive
1.5	12.90 - 06.04	51	1500	4	VAZ 21083	**T356S**	**T135H**	**T413M**	premium / basic / inductive
1.5i 8V	96 - 06.04	57	1499	4	VAZ 2111	**T395S**	**T684H**	**T514M**	premium / basic / inductive
Samara 2 (VAZ 2113)									
1.5i 8V	09.04 - 09.07	57	1499	4	VAZ 2111	**T395S**	**T684H**	**T514M**	premium / basic / inductive
1.6i 8V	09.07 - 02.10	58	1596	4	VAZ 11183	**T395S**	**T684H**	**T514M**	premium / basic / inductive
Samara 2 (VAZ 2114)									
1.5i 8V	10.01 - 08.07	57	1499	4	VAZ 2111	**T395S**	**T684H**	**T514M**	premium / basic / inductive
1.6i 8V	09.07 - 12.13	60	1596	4	VAZ 21114	**T395S**	**T684H**	**T514M**	premium / basic / inductive
Samara 2 (VAZ 2115)									
1.5i 8V	03.97 - 03.12	57	1499	4	VAZ 2111	**T395S**	**T684H**	**T514M**	premium / basic / inductive
1.6i 8V	03.97 - 03.12	58	1596	4	VAZ 11183	**T395S**	**T684H**	**T514M**	premium / basic / inductive
1.6i 8V	03.97 - 03.12	60	1596	4	VAZ 21114	**T395S**	**T684H**	**T514M**	premium / basic / inductive
VAZ 2101, 21011 Zhiguli									
1.2	71 - 83	43	1200	4	VAZ 2101	**T355S**	**T134H**	**T412M**	premium / basic / inductive
1.3	74 - 81	47	1300	4	VAZ 21011	**T355S**	**T134H**	**T412M**	premium / basic / inductive
1.5	70 - 88	52	1500	4	VAZ 2103	**T355S**	**T134H**	**T412M**	premium / basic / inductive
VAZ 2102 Zhiguli									
1.2	71 - 79	43	1200	4	VAZ 2101	**T355S**	**T134H**	**T412M**	premium / basic / inductive
1.3	78 - 86	47	1300	4	VAZ 21011	**T355S**	**T134H**	**T412M**	premium / basic / inductive
VAZ 2103 Zhiguli									
1.2	72 - 81	43	1200	4	VAZ 2101	**T355S**	**T134H**	**T412M**	premium / basic / inductive
1.3	77 - 83	47	1300	4	VAZ 21011	**T355S**	**T134H**	**T412M**	premium / basic / inductive
1.5	72 - 84	52	1500	4	VAZ 2103	**T355S**	**T134H**	**T412M**	premium / basic / inductive
LANCIA									
Beta (828)									
1600	08.80 - 09.84	74	1585	4	828 B.000	**T244B**			
2000 i.e.	05.81 - 09.84	90	1995	4	828 B4.000	**T244B**			
Dedra (835)									
1.6 i.e.	08.89 - 03.93	57	1581	4	835 A1.046	**T550B**			
1.6 i.e.	08.89 - 06.94	66	1581	4	835 A1.000	**T550B**			
1.6 i.e.	04.93 - 07.99	55	1581	4	835 C1.000	**T552C**	**T013B**		original / alternative
1.6 LE cat	07.94 - 07.99	66	1581	4	159 B9.000	**T830B**			
1.6 16V	01.96 - 07.99	76	1581	4	182 A4.000	**T845B**			
1.8 i.e.	09.89 - 06.94	80	1756	4	835 A2.000	**T723B**			
1.8 i.e.	08.93 - 07.99	66	1756	4	835 C5.000	**T723B**			
1.8 i.e.	07.94 - 07.99	74	1756	4	836 A5.000	**T551B**			
1.8 16V LE	03.96 - 07.99	83	1747	4	182 A2.000	**T551B**			
2.0 HF Integrale	11.90 - 07.94	124	1995	4	835 A7.046	**T723B**			
2.0 i.e	09.89 - 07.92	86	1995	4	835 A5.000	**T723B**			
2.0 i.e	09.89 - 07.99	83	1995	4	835 A5.046	**T723B**			
2.0 i.e. Turbo	04.91 - 07.99	119	1995	4	835 A8.046	**T723B**			
2.0 i.e. Turbo Integr.	05.90 - 07.94	121	1995	4	835 A7.000	**T723B**			
2.0 16V	07.94 - 07.99	102	1995	4	836 A3.000	**T542B**			
Dedra SW (835)									
1.6	10.94 - 07.99	66	1581	4	159 B9.000	**T830B**			
1.6 16V	01.96 - 07.99	76	1581	4	182 A4.000	**T845B**			
1.8 16V LE	03.96 - 07.99	83	1747	4	182 A2.000	**T551B**			
1.8 i.e.	07.94 - 07.99	74	1756	4	836 A5.000	**T551B**			
2.0 16V	07.94 - 07.99	102	1995	4	836 A3.000	**T542B**			
2.0 Integrale	07.94 - 07.99	102	1995	4	836 A3.000	**T542B**			
Delta I (831AB0)									
1.1	01.86 - 12.90	47	1116	4	831 B8.000	**T829B**			
1.3	09.79 - 08.92	55	1301	4	831 A2.000/831 B.000	**T829B**			

LANCIA Delta I (831AB0) ▶

model	year	kW	cm³	cyl	engine	I	II	III	info
Delta I (831AB0)									
1.3	09.83 - 08.92	58	1301	4	831 A2.000	**T829B**			
1.5	09.79 - 10.82	63	1498	4	831 A1.000/831 B1.000	**T550B**			
	11.82 - 12.92	63	1498	4	831 A1.000/831 B1.000	**T829B**			
1.6 GT	11.82 - 04.86	77	1585	4	831 A4.000	**T239B**			
1.6 GT i.e.	05.87 - 08.92	66	1585	4	149 C2.000	**T239B**			
1.6 GT i.e.	08.86 - 08.88	80	1585	4	831 B7.000	**T222B**			
2.0 HF Integrale	12.86 - 12.92	130	1995	4	831 C5.046	**T240B**			
2.0 16V HF Integrale	03.89 - 09.91	144	1995	4	831 D5.000	**T240B**			
2.0 16V HF Evo Integr.	06.93 - 01.94	155	1995	4	831 E5.046/831 E5.000	**T543B**			
Delta II (836)									
1.4 i.e.	10.94 - 08.99	51	1372	4	160 A1.046	**T645B**			with distributor
	10.94 - 08.99	51	1372	4	836 A4.000	**T552C**	**T013B**		orig. / alter., without distrib.
1.6 i.e.	06.93 - 08.99	55	1581	4	835 C1.000	**T552C**	**T013B**		original / alternative
1.6 i.e.	03.96 - 08.99	66	1581	4	182 A6.000	**T845B**			
1.6 i.e. 16V	01.96 - 08.99	76	1581	4	182 A4.000	**T845B**			
1.8 i.e.	07.94 - 08.99	66	1756	4	835 C4.000/836 C4.000	**T551B**			
1.8 i.e.	12.94 - 08.99	76	1756	4	835 C2.000	**T551B**			
1.8 i.e. 16V	03.96 - 08.99	83	1747	4	182 A2.000	**T551B**			
1.8 i.e. 16V GT	03.96 - 08.99	96	1747	4	183 A1.000	**T551B**			
2.0 16V	06.93 - 08.99	102	1995	4	836 A3.000	**T542B**			
2.0 16V Turbo	06.93 - 08.99	137	1995	4	836 A2.000	**T543B**			
2.0 16V Turbo	07.96 - 08.99	142	1995	4	175 A4.000	**T543B**			
Kappa (838A)									
2.0 16V Turbo	02.95 - 10.01	151	1995	4	838 A4.000	**T554B**			
Kappa Coupe (838)									
2.0 16V Turbo	11.96 - 03.01	151	1995	4	838 A4.000	**T554B**			
Kappa SW (838B)									
2.0 16V Turbo	07.96 - 10.01	151	1995	4	838 A4.000	**T554B**			
Lybra (839AX), Lybra SW (839BX)									
1.6 16V	07.99 - 10.05	76	1581	4	182 A4.000	**T845B**			
Musa (350)									
1.4	09.05 -	57	1368	4	350 A1.000	**T631B**			
1.4 LPG	11.10 -	57	1368	4	350 A1.000	**T631B**			
Prisma (831AB0)									
1.3	01.83 - 02.92	58	1301	4	831 A2.000	**T829B**			
1.5	01.83 - 04.86	63	1498	4	831 A1.000	**T829B**			
1.5	09.85 - 02.92	55	1498	4	831 B1.048	**T829B**			
1.6 i.e.	05.86 - 12.89	80	1585	4	831 B7.000	**T241B**			
1.6 i.e. Super	05.87 - 12.89	66	1585	4	149 C2.000	**T241B**			
2.0 i.e. Allrad	04.86 - 12.89	85	1995	4	831 B4.000	**T241B**			
Thema (834)									
2000 16V	08.92 - 12.93	112	1995	4	834 F1.000	**T554B**			
2000 16V Turbo	12.88 - 06.90	133	1995	4	834 C1.000	**T543B**			
2000 16V Turbo	10.92 - 07.94	148	1995	4	834 F2.000	**T554B**			
2000 i.e.	11.84 - 09.88	88	1995	4	834 B.000	**T239B**			
2000 i.e. Turbo	11.84 - 12.87	122	1995	4	834 C.000	**T239B**			
2000 i.e.Turbo	07.86 - 05.90	110	1995	4	834 C.146	**T222B**			
2000 i.e. 16V	05.88 - 08.92	108	1995	4	834 B2.000	**T543B**			
2000 i.e. 16V	02.89 - 05.92	104	1995	4	834 B2.246	**T543B**			
2000 i.e. 16V Turbo	04.89 - 05.92	130	1995	4	834 C1.246	**T543B**			
3000 V6	08.92 - 07.94	126	2959	6	834 F.000	**T595C**			
Thema SW (834)									
2000 Turbo	01.89 - 03.92	110	1995	4	834 C.146	**T222B**			
2000 16V	05.92 - 07.94	112	1995	4	834 F1.000	**T554B**			
2000 Turbo 16V	11.92 - 07.94	148	1995	4	834 F2.000	**T554B**			
2000 i.e. 16V	05.89 - 08.92	108	1995	4	834 B2.000	**T543B**			
2000 i.e. 16V	02.89 - 05.92	104	1995	4	834 B2.246	**T543B**			
2000 i.e. 16V Turbo	12.88 - 06.90	133	1995	4	834 C1.000	**T543B**			
2000 i.e. 16V Turbo	04.89 - 03.93	130	1995	4	834 C1.246	**T543B**			
3000 V6	09.92 - 07.94	126	2959	6	834 F.000	**T595C**			
Y (840A)									
1.1	11.95 - 09.03	40	1108	4	176 B2.000	**T722B**			
1.2	03.96 - 09.03	44	1242	4	188 A4.000	**T178B**			
	03.96 - 09.03	44	1242	4	840 A3.000	**T722B**			
1.2 16V	04.97 - 09.03	63	1242	4	176 B9.000	**T997B**			
1.2 16V	10.00 - 09.03	59	1242	4	188 A5.000	**T998B**			
1.4 12V	03.96 - 09.03	55	1370	4	840 A4.000	**T757C**	**T897B**		original / alternative
1.4 12V	10.96 - 09.03	59	1370	4	840 A2.000	**T757C**	**T897B**		original / alternative
Y10 (156)									
1.0 Fire	06.85 - 06.91	32	999	4	156 A 2.100	**T129B**			

LANCIA Y10 (156) ▶

model	year	kW	cm³	cyl	engine	I	II	III	info
Y10 (156)									
1.0 Fire	03.85 - 06.89	33	999	4	156 A 2.000	**T244B**			
1.0 Fire cat	10.87 - 02.92	33	999	4	156 A2.246	**T244B**			
1.0 Fire Allrad	12.86 - 02.89	32	999	4	156 A 2.100	**T129B**			
1.0 Fire Allrad	12.87 - 02.92	33	999	4	156 A2.246	**T244B**			
1.0 Turbo	03.85 - 02.89	62	1049	4	156 A 1.000	**T244B**			
1.1 Avenue	01.95 - 12.95	40	1108	4	176 B2.000	**T242B**			
1.1 Avenue Allrad	01.95 - 12.95	40	1108	4	176 B2.000	**T242B**			
1.1 i.e	08.89 - 06.92	42	1108	4	156 C.000	**T129B**			
1.1 i.e Allrad	08.89 - 06.92	42	1108	4	156 C.000	**T129B**			
1.1 i.e. Fire	07.89 - 09.92	37	1108	4	156 C.046	**T129B**			with distributor
	10.92 - 09.95	37	1108	4	156 C.046	**T242B**			without distributor
1.1 i.e. Fire Allrad	09.92 - 12.95	37	1108	4	156 C.046	**T129B**			with distributor
	09.92 - 12.95	37	1108	4	156 C.046	**T242B**			without distributor
1.3 i.e. Fire	02.89 - 12.95	53	1297	4	156 B.000/146 A 5.046	**T791B**			
Ypsilon (843)									
1.2	10.03 - 12.11	44	1242	4	188 A4.000	**T178B**			
1.2	08.10 - 12.11	51	1242	4	169 A4.000	**T631B**			
1.4	02.06 - 12.11	57	1368	4	350 A1.000	**T631B**			
1.4 LPG	11.10 - 12.11	57	1368	4	350 A1.000	**T631B**			
Ypsilon (846)									
1.2	05.11 -	51	1242	4	169 A4.000	**T631B**			
1.2 Bifuel	05.11 -	49	1242	4	169 A4.000	**T631B**			
Zeta (220)									
2.0 16V	07.00 - 09.02	100	1997	4	RFN	**T498B**			
2.0 Turbo	05.95 - 09.02	108	1998	4	RGX (XU10J2TE)	**T498B**			
LANDROVER									
Discovery I (LJ, LG)									
2.0 16 V	09.93 - 10.98	99	1994	4		**T442B**			
3.5	10.89 - 06.94	113	3531	8	22 D	**T138B**			
3.9 V8	09.93 - 10.98	134	3947	8	36 D/35 D	**T138B**			
Discovery II (LJ, LT)									
4.0 V8	11.98 - 06.04	136	3950	8	56 D	**T131B**			
Freelander (LN)									
1.8 16V	11.00 - 10.06	86	1796	4	18 K4F	**T565B**			semidirect
1.8 i 16V	02.98 - 11.00	88	1796	4	18 K4F	**T331B**			
2.5 V6	11.00 - 10.06	130	2497	6	25 K4F	**T365C**			semidirect
Freelander Soft Top									
1.8 i 16V	02.98 - 10.06	88	1796	4	18 K4F	**T331B**			
	02.98 - 10.06	88	1796	4	18 K4F	**T565B**			semidirect
Range Rover I									
3.5	07.70 - 08.81	97	3532	8	11 D	**T138B**			
3.5	10.85 - 08.91	96	3528	8		**T138B**			
3.5	01.87 - 09.90	107	3528	8	31 D	**T138B**			
3.5 Vogue	08.81 - 09.90	93	3528	8	11 D	**T667B**			
3.5 Vogue	10.85 - 09.90	120	3528	8	25 D/24 D	**T138B**			
3.9 cat	11.88 - 07.94	127	3950	8	37 D/38 D	**T667B**			
3.9 Vogue SEI	11.88 - 07.94	134	3950	8	36 D/35 D	**T667B**			
4.3 Vogue LSE	09.92 - 07.94	149	4275	8	40 D	**T667B**			
Range Rover II (LP)									
3.9	07.94 - 03.02	140	3947	8	42 D	**T131B**			PIN
	07.94 - 03.02	140	3947	8	42 D	**T138B**			DIN
4.0	06.98 - 03.02	136	3950	8		**T131B**			
4.6	07.94 - 03.02	165	4553	8	46 D	**T131B**			PIN
	07.94 - 03.02	165	4553	8	46 D	**T138B**			DIN
4.6	06.98 - 03.02	160	4554	8	60 D	**T131B**			
LEXUS									
ES (F1, F2)									
300	09.91 - 12.97	138	2959	6	3VZ-FE	**T522P**			
ES (MCV_)									
300	10.96 - 07.01	140	2995	6	1MZ-FE	**T978P**			semidirect
300	10.96 - 07.01	149	2995	6	1MZ-FE	**T978P**			semidirect
GS (JZS, UZS, GRS)									
300	03.93 - 08.97	156	2997	6	2JZ-GE	**T639P**			
300	10.00 - 03.05	161	2997	6	2JZ-GE	**T973P**			
300 T3	08.97 - 10.00	163	2997	6	2JZ-GE	**T973P**			
IS I									
300	08.97 - 10.00	157	2997	6	2JZ-GE	**T973P**			semidirect

LEXUS IS Sportcross ▶

model	year	kW	cm³	cyl	engine	I	II	III	info
IS Sportcross									
300	10.01 - 10.05	157	2997	6	2JZ-GE	**T973P**			semidirect
LS (UCF10)									
400	12.89 - 12.94	180	3969	8	1UZ-FE	**T398P**			
400	12.94 - 08.97	194	3969	8	1UZ-FE	**T398P**			
400	09.97 - 10.00	209	3969	8	1UZ-FE	**T398P**			
400	09.98 - 10.00	203	3969	8	1UZ-FE	**T398P**			
LIFAN									
320									
1.3	09 -	65	1342	4	LF479Q3	**T333B**			
520 Sedan									
1.3	06 -	65	1342	4	LF479Q3	**T333B**			
1.6	06 -	78	1587	4	LF481Q3	**T333B**			
1.6	06 -	85	1596	4	Tritec	**T333B**			
520i Hatchback									
1.3	06 -	65	1342	4	LF479Q3	**T333B**			
1.6	06 -	78	1587	4	LF481Q3	**T333B**			
1.6	06 -	85	1596	4	Tritec	**T333B**			
620									
1.3	08 -	65	1342	4	LF479Q3	**T333B**			
1.6	08 -	78	1587	4	LF481Q3	**T333B**			
1.6	08 -	85	1596	4	Tritec	**T333B**			
Smily									
1.3	09 -	65	1342	4	LF479Q3	**T333B**			
Breez Sedan									
1.3	06 -	65	1342	4	LF479Q3	**T333B**			
1.6	06 -	78	1587	4	LF481Q3	**T333B**			
Breez Hatchback									
1.3	06 -	65	1342	4	LF479Q3	**T333B**			
1.6	06 -	78	1587	4	LF481Q3	**T333B**			
Solano Sedan									
1.3	08 -	65	1342	4	LF479Q3	**T333B**			
1.6	08 -	78	1587	4	LF481Q3	**T333B**			
LuAZ									
1301									
1.1	01.89 -	38	1091	4	MeMZ 245	**T367S**	**T137H**	**T860M**	premium / basic / inductive
1302									
1.2	01.90 -	42	1200	4	MeMZ 2457	**T367S**	**T137H**	**T860M**	premium / basic / inductive
MAZDA									
121 I (DA)									
1.1	10.87 - 10.90	42	1139	4	B1/B116	**T480B**			
1.3	10.87 - 11.90	44	1324	4	B3	**T480B**			
1.3	04.89 - 10.90	40	1324	4	B3	**T480B**			
121 II (DB)									
1.1	11.90 - 10.93	40	1138	4	B1	**T898B**			
1.3 16V	11.90 - 03.96	39	1324	4	B3 (16V)	**T898B**			
1.3 i 16V	11.90 - 03.96	53	1324	4	B3 (16V)	**T898B**			
121 III (JASM, JBSM)									
1.25	03.96 - 04.98	55	1242	4	DHG/DHF	**T773G**			DIN FORD
	05.98 - 04.03	55	1242	4	DHG/DHF	**T726G**			PIN
1.3	03.96 - 04.03	37	1299	4	JJM/JJK	**T164G**			DIN FORD
	03.96 - 04.03	37	1299	4	JJM/JJK	**T995G**			PIN
1.3	03.96 - 04.03	44	1299	4	J4R/J4T	**T164G**			DIN FORD
	03.96 - 04.03	44	1299	4	J4R/J4T	**T995G**			PIN
2 (DY)									
1.25	04.03 -	55	1242	4	FUJA	**T972G**			
1.4	04.03 -	59	1388	4	FXJA	**T972G**			
1.6	04.03 -	74	1596	4	FYJA	**T972G**			
323 II, 323 II Hatchback (BD)									
1.1	11.80 - 10.85	40	1071	4	E1	**T481B**			
1.3	09.81 - 10.85	44	1296	4	E3	**T481B**			
1.3	11.80 - 10.89	50	1296	4	E3	**T481B**			
1.5	11.80 - 07.85	59	1490	4	E5	**T481B**			
1.5	05.81 - 12.85	55	1490	4	E5	**T481B**			
1.5	03.82 - 09.86	65	1490	4	E5	**T481B**			
1.6 GLX	06.86 - 03.87	54	1597	4	B68	**T481B**			
323 III (BF)									
1.1	08.85 - 04.90	40	1071	4	E1	**T481B**			

MAZDA 323 III (BF) ▶

model	year	kW	cm³	cyl	engine	I	II	III	info
323 III (BF)									
1.3	08.85 - 05.89	44	1296	4	E3	**T480B**			
1.4	04.87 - 07.89	44	1324	4	B3	**T482B**			
1.5	08.85 - 05.89	55	1490	4	E5	**T556B**			
1.5	09.87 - 10.89	54	1498	4	B5	**T481B**			
1.5 i	08.85 - 05.89	70	1490	4	E5E3	**T480B**			
1.5 i Turbo	08.85 - 05.89	85	1490	4	E5E2	**T480B**			
1.6 GLX	06.86 - 03.87	54	1597	4	B68	**T963B**			
1.6 GT	11.86 - 10.89	63	1597	4	B6 (SOHC)	**T481B**			
1.6 GT	01.86 - 12.88	77	1598	4	B6 (SOHC)	**T481B**			
1.6 GT Turbo	10.85 - 11.91	103	1598	4	B6T	**T963B**			
323 III Hatchback (BF)									
1.1	09.85 - 10.89	40	1071	4	E1	**T481B**			
1.3	09.85 - 12.87	44	1296	4	E3	**T480B**			
1.4	09.87 - 10.89	44	1324	4	B3	**T482B**			
1.5	08.85 - 05.89	55	1490	4	E5	**T556B**			
1.5	09.87 - 10.89	54	1498	4	B5	**T481B**			
1.5 i	08.85 - 05.89	70	1490	4	E5E3	**T480B**			
1.5 i Turbo	08.85 - 05.89	85	1490	4	E5E2	**T480B**			
1.6	09.87 - 10.89	54	1597	4	B68	**T963B**			
1.6 GT	09.87 - 10.89	63	1597	4	B6 (SOHC)	**T481B**			
1.6 GT	08.85 - 08.93	77	1598	4	B6 (SOHC)	**T481B**			
1.6 GT Turbo	10.85 - 08.93	103	1598	4	B6T	**T963B**			
1.6 GT Turbo 4WD	08.87 - 10.89	110	1597	4		**T963B**			
1.6 GT Turbo 4WD	10.87 - 11.91	103	1598	4	B6T	**T963B**			
323 III Station Wagon (BW)									
1.3	07.86 - 04.90	44	1296	4	E3	**T480B**			
1.5	05.86 - 05.89	55	1490	4	B50/B53/E5	**T481B**	**T556B**		boot design
1.5	01.87 - 05.89	54	1498	4	B50/B53/B5	**T481B**			
1.6	09.86 - 10.95	63	1598	4	B6 (SOHC)/B65M /B6E	**T482B**			
1.6	09.87 - 10.89	54	1597	4	B68	**T963B**			
1.6 4x4	05.90 - 03.93	63	1598	4	B65M /B6E	**T482B**			
323 C IV (BG)									
1.3	09.89 - 07.94	49	1324	4	B3E	**T482B**			
1.3 16V	09.89 - 07.94	54	1324	4	B3 (16V)	**T482B**			
1.6	09.89 - 06.91	62	1598	4	B6E	**T482B**			
1.6 16V	03.91 - 10.94	65	1598	4	B6	**T482B**			
1.8 16V	09.89 - 03.93	103	1840	4	BP22/BP31	**T964B**			
1.8 16V 4WD	11.91 - 12.93	76	1840	4	BP	**T482B**			
1.8 16V GT	09.89 - 03.93	94	1840	4	BP (DOHC)	**T964B**			
1.8 16V Turbo 4WD	09.90 - 12.92	120	1840	4	BP Turbo	**T964B**			
1.8 16V Turbo 4WD	01.93 - 07.94	136	1840	4	BP Turbo	**T964B**			
323 C V (BA)									
1.3 16V	08.94 - 09.98	54	1324	4	B3 (16V)	**T898B**			
1.5 16V	08.94 - 09.98	65	1489	4	Z5-DE	**T980B**			
1.8 16V	08.94 - 09.98	84	1840	4	BP-ZE	**T556B**			
323 F IV (BG)									
1.6	09.89 - 06.91	62	1598	4	B6E	**T482B**			
1.6 16V	03.91 - 10.94	65	1598	4	B6	**T482B**			
1.8 16V	08.89 - 07.94	76	1840	4	BP	**T482B**			
1.8 16V	09.89 - 03.93	103	1840	4	BP31	**T964B**			
1.8 16V GT	08.89 - 07.94	94	1840	4	BP (DOHC)	**T964B**			
1.8 4WD	01.91 - 04.94	76	1840	4	BPC	**T482B**			
323 F V (BA)									
1.5 16V	07.94 - 09.98	65	1489	4	Z5-DE	**T980B**			
1.8 16V	08.94 - 09.98	84	1840	4	BP-ZE	**T556B**			
2.0 24V	08.94 - 09.98	106	1995	6	KF	**T873B**			
323 F VI (BJ)									
1.4	01.01 - 05.04	53	1324	4	B3 (16V)	**T822B**			
1.4 16V	09.98 - 01.01	54	1324	4	B3 ME	**T822B**			
1.5 16V	09.98 - 01.01	65	1498	4	ZL06/ZL05	**T247P**			semidirect
1.6	01.01 - 05.04	70	1598	4	ZM	**T247P**			semidirect
1.6	01.01 - 05.04	72	1598	4	ZM	**T247P**			semidirect
1.9 16V	09.98 - 01.01	84	1840	4	FP55	**T245B**			
2.0	01.01 - 05.04	96	1991	4	FS7G/FS7E	**T248P**			semidirect
323 P V (BA)									
1.3 16V	10.96 -	54	1324	4	B3 (16V)	**T898B**			
1.5 16V	10.96 -	65	1489	4	Z5-DE	**T980B**			
323 S IV (BG)									
1.3	09.89 - 06.91	49	1324	4	B3E/B383	**T482B**			
1.3 16V	04.91 - 07.94	54	1324	4	B3 (16V)	**T482B**			

MAZDA 323 S IV (BG) ▶

model	year	kW	cm³	cyl	engine	I	II	III	info
323 S IV (BG)									
1.6	09.89 - 06.91	62	1598	4	B6E	**T482B**			
1.6 16V	08.89 - 10.94	65	1598	4	B6	**T482B**			
1.8 16V	08.89 - 07.94	76	1840	4	BP52	**T482B**			
1.8 16V 4WD	09.91 - 07.94	76	1840	4	BP52	**T482B**			
1.8 16V GT	06.89 - 07.94	94	1840	4	BP (DOHC)	**T964B**			
1.8 16V Turbo 4WD	01.91 - 07.94	120	1840	4	BP Turbo	**T964B**			
323 S V (BA)									
1.3 16V	08.94 - 09.98	54	1324	4	B3 (16V)	**T898B**			
1.5 16V	08.94 - 09.98	65	1489	4	Z5-DE	**T980B**			
1.8 16V	08.94 - 09.98	84	1840	4	BP-ZE	**T556B**			
323 S VI (BJ)									
1.4	01.01 - 05.04	53	1324	4	B3 (16V)	**T822B**			
1.4 16V	09.98 - 01.01	54	1324	4	B3 ME	**T822B**			
1.5 16V	09.98 - 01.01	65	1498	4	ZL06/ZL05	**T247P**			semidirect
1.6	01.01 - 05.04	70	1598	4	ZM	**T247P**			semidirect
1.6	01.01 - 05.04	72	1598	4	ZM	**T247P**			semidirect
1.9 16V	09.98 - 05.04	84	1840	4	FP55	**T245B**			
2.0	01.01 - 05.04	96	1991	4	FS7G/FS7E	**T248P**			semidirect
6 (GG)									
1.8	08.02 - 08.07	88	1798	4	L813	**T297B**			
2.0	06.02 - 08.07	104	1999	4	LF18/LF17	**T297B**			
2.3	06.02 - 08.07	122	2261	4	L3C1	**T297B**			
6 Hatchback (GG)									
1.8	08.02 - 08.07	88	1798	4	L813	**T297B**			
2.0	08.02 - 08.07	104	1999	4	LF18/LF17	**T297B**			
2.3	08.02 - 08.07	122	2261	4	L3C1	**T297B**			
6 Station Wagon (GY)									
1.8	08.02 - 08.07	88	1798	4	L813	**T297B**			
2.0	08.02 - 08.07	104	1999	4	LF18/LF17	**T297B**			
2.3	08.02 - 08.07	122	2261	4	L3C1	**T297B**			
2.3 AWD	11.02 - 08.07	119	2261	4	L3C1	**T297B**			
626 II (GC), 626 II Hatchback (GC)									
1.6	11.82 - 09.87	59	1587	4	F6	**T246B**			
2.0	03.83 - 09.87	74	1998	4	FE	**T246B**			
2.0	01.86 - 09.87	88	1998	4	FE	**T246B**			
626 III (GD)									
1.6	06.87 - 05.92	60	1597	4		**T899B**			
1.8	11.87 - 05.92	65	1789	4	F8 (12V)	**T899B**			
2.0	09.87 - 10.90	66	1998	4	FE	**T899B**			
2.0 12V	09.87 - 05.92	79	1998	4	FE (12V)	**T507B**			coil cable 55 cm
	09.87 - 05.92	79	1998	4	FE (12V)	**T899B**			coil cable 75 cm
2.0 16V	11.87 - 05.92	103	1998	4	FE cat. (16V)	**T507B**			
2.0 16V	07.87 - 09.89	109	1998	4	FE cat. (16V)	**T507B**			
2.2 12V	11.87 - 07.91	85	2184	4	F2	**T899B**			
2.2 12V 4WD	01.90 - 05.92	85	2184	4	F2	**T899B**			
626 III Coupe (GD)									
1.6	06.87 - 05.92	60	1597	4		**T899B**			
1.8	09.87 - 08.91	65	1789	4	F8 (12V)	**T899B**			
2.0	09.87 - 10.90	66	1998	4	FE	**T899B**			
2.0 12V	09.87 - 12.88	79	1998	4	FE (12V)	**T507B**			coil cable 55 cm
	09.87 - 12.88	79	1998	4	FE (12V)	**T899B**			coil cable 75 cm
2.0 16V	12.87 - 10.90	103	1998	4	FE cat. (16V)	**T507B**			
2.0 16V	06.87 - 09.89	109	1998	4	FE cat. (16V)	**T507B**			
2.2 12V	04.88 - 12.91	85	2184	4	F2	**T899B**			
626 III Hatchback (GD)									
1.6	06.87 - 05.92	60	1597	4		**T899B**			
1.8	11.87 - 05.92	65	1789	4	F8 (12V)	**T899B**			
2.0	09.87 - 10.90	66	1998	4	FE	**T899B**			
2.0 12V	11.87 - 05.92	79	1998	4	FE (12V)	**T507B**			coil cable 55 cm
	11.87 - 05.92	79	1998	4	FE (12V)	**T899B**			coil cable 75 cm
2.0 16V	11.87 - 10.90	103	1998	4	FE cat. (16V)	**T507B**			
2.0 16V	06.87 - 08.89	109	1998	4	FE cat. (16V)	**T507B**			
2.0 4x4	08.89 - 07.91	110	1998	4		**T899B**			
2.2 12V	06.88 - 04.92	85	2184	4	F2	**T899B**			
2.2 12V 4WD	11.87 - 07.90	85	2184	4	F2	**T899B**			
626 III Station Wagon (GV)									
1.8	01.88 - 03.92	65	1789	4	F8 (12V)	**T899B**			
2.0	10.88 - 09.97	66	1998	4	FE	**T899B**			
2.0 12V	09.87 - 01.90	81	1998	4	FE (12V)	**T507B**			coil cable 55 cm
	09.87 - 01.90	81	1998	4	FE (12V)	**T899B**			coil cable 75 cm

MAZDA 626 III Station Wagon (GV) ▶

model	year	kW	cm³	cyl	engine	I	II	III	info
626 III Station Wagon (GV)									
2.0 16V	01.88 - 03.92	103	1998	4	FE cat. (16V)	**T507B**			
2.0 i 16V	11.94 - 09.97	110	1998	4		**T899B**			
2.2 12V	03.89 - 11.96	85	2184	4	F2	**T899B**			
2.2 12V 4WD	05.91 - 11.92	85	2184	4	F2L1/F2	**T899B**			
626 IV (GE)									
1.8 i	01.92 - 04.97	77	1840	4	FP	**T760B**			
1.8 i	08.94 - 04.97	66	1840	4		**T760B**			
2.0 i	01.92 - 04.97	85	1991	4	FS	**T760B**			
2.0 i 4WD	04.92 - 04.97	85	1991	4	FS	**T760B**			
626 IV Hatchback (GE)									
1.8	08.91 - 04.97	77	1840	4	FP	**T760B**			
1.8	08.94 - 04.97	66	1840	4		**T760B**			
2.0 i	08.91 - 04.97	85	1991	4	FS	**T760B**			
2.0 i 4WD	04.92 - 04.97	85	1991	4	FS	**T760B**			
2.5 24V	01.92 - 04.97	121	2497	6	KL	**T872B**			
2.5 24V	08.94 - 04.97	120	2497	6	KL	**T872B**			
626 V (GF)									
1.8	05.97 - 12.99	66	1840	4	FPY3	**T181B**			
1.8	12.99 - 10.02	74	1840	4	FP9A	**T181B**			
2.0	05.97 - 10.02	85	1991	4	FS	**T181B**			
2.0	04.98 - 10.02	100	1991	4	FS2C	**T181B**			
626 V Hatchback (GF)									
1.8	05.97 - 12.99	66	1840	4	FPY3	**T181B**			
1.8	12.99 - 10.02	74	1840	4	FP	**T181B**			
2.0	05.97 - 10.02	85	1991	4	FS	**T181B**			
2.0 H.P.	02.98 - 10.02	100	1991	4	FS2C	**T181B**			
626 V Station Wagon (GW)									
1.8	02.98 - 01.00	66	1840	4	FPY3	**T181B**			
1.8	01.00 - 10.02	74	1840	4	FP9A	**T181B**			
2.0	02.98 - 10.02	85	1991	4	FS	**T181B**			
2.0 H.P.	02.98 - 10.02	100	1991	4	FS2C	**T181B**			
929 II (HB)									
2.0	03.84 - 07.87	74	1998	4	FE	**T246B**			
2.0 i Turbo	10.84 - 07.87	88	1998	4	FET/FE	**T246B**			
B-Serie									
2.2 8V 4WD	06.99 -	68	2148	4	JL22	**T431B**			
Demio (DW)									
1.3 16V	08.98 -	46	1324	4	B3 ME	**T300B**			
1.3 i 16V	08.98 - 04.00	53	1324	4	B3 (16V)	**T300B**			
1.5 16V	04.00 -	55	1498	4	B5E	**T300B**			
E-Serie									
E2000 Bus	11.84 - 02.88	63	1998	4	FE18/FEV4	**T485B**			
E2000 Bus 4WD	10.88 - 09.89	60	1998	4	FEBN	**T485B**			
E2000 Van	05.85 - 04.89	63	1998	4	FE18/FE58	**T485B**			
E2000 Van	03.91 - 05.94	60	1998	4	FE60/FE61/FE	**T301B**			
E2000 Van	06.94 - 05.03	70	1998	4	FE	**T301B**			
MPV I (LV)									
3.0 i V6	05.96 - 09.99	109	2954	6	JE94	**T296B**			
3.0 i V6	03.95 - 09.99	113	2954	6	JE94	**T296B**			
MPV II (LW)									
2.0	09.99 - 08.00	90	1991	4	FS-DS	**T248P**			semidirect
2.0	08.00 - 07.02	88	1991	4	FS	**T248P**			semidirect
2.3	07.02 - 02.06	104	2261	4	L3	**T297B**			
2.5	11.99 - 09.03	125	2495	6	GY-DE	**T548G**			DIN FORD
	11.99 - 09.03	125	2495	6	GY-DE	**T549G**			PIN
MX-3 (EC)									
1.6 i	07.91 -	65	1598	4	B69	**T482B**			
1.6 i	01.94 -	79	1598	4	B6D	**T556B**			
1.8 i V6	01.92 - 01.94	98	1845	6	K819	**T871B**			
1.8 i V6	01.94 -	95	1845	6	K838	**T871B**			
MX-5 I (NA)									
1.6	05.90 - 01.94	85	1598	4	B64F	**T555B**			
1.6	01.95 - 04.98	66	1598	4		**T555B**			
1.8	02.94 - 04.98	96	1840	4	BPF1 /BP (DOHC)	**T555B**			
1.8	09.93 - 12.97	96	1839	4	BPF1	**T555B**			
MX-5 II (NB)									
1.6 16V	05.98 - 10.05	81	1598	4	B6D	**T555B**			
1.8 16V	05.98 - 10.05	103	1840	4	BP-ZE	**T555B**			

MAZDA MX-6 (GE)

model	year	kW	cm³	cyl	engine	I	II	III	info
MX-6 (GE)									
2.0	02.92 - 02.97	85	1991	4	FS	**T760B**			
2.5 24V	02.92 - 02.97	121	2497	6	KL	**T872B**			
2.5 i 24V	08.94 - 02.97	120	2497	6	KL	**T872B**			
Premacy (CP)									
1.8	07.99 - 03.05	74	1840	4	FP	**T248P**			semidirect
1.9	07.99 - 03.05	84	1840	4	FP	**T248P**			semidirect
2.0	11.01 - 03.05	96	1991	4	FS7G/FS7E	**T248P**			semidirect
Tribute (EP)									
2.0	03.00 - 05.08	91	1989	4	YF	**T726G**			
2.0 4WD	03.00 - 05.08	91	1989	4	YF	**T726G**			
RX 8 (SE17)									
2.6 Wankel	10.03 - 06.12	170	1308	2	13B-MSP	**T772B**			
Xedos 6 (CA)									
1.6 16V	06.94 - 10.99	79	1598	4	B6 (DOHC)	**T302B**			
1.6 16V	08.92 - 05.94	83	1598	4	B69	**T302B**			
2.0 V6	01.92 - 05.94	106	1995	6	KF1	**T873B**			
2.0 V6	06.94 - 10.99	103	1995	6	KF1	**T873B**			
Xedos 9 (TA)									
2.0 24V	08.93 - 01.00	105	1995	6	KF	**T872B**			
2.3 24V	02.95 - 01.00	155	2255	6	KJ -ZEM	**T872B**			
2.5 24V	07.93 - 07.00	123	2497	6	KL	**T872B**			
MERCEDES									
190 (W201)									
2.0	10.82 - 10.84	66	1996	4	M 102.921	**T740C**	**T069B**	**T619B**	orig. / alter. / suppl.
2.0	01.86 - 05.90	75	1996	4	M 102.924	**T740C**	**T069B**	**T619B**	orig. / alter. / suppl.
2.0	09.84 - 05.90	77	1996	4	M 102.924	**T740C**	**T069B**	**T619B**	orig. / alter. / suppl.
2.6	10.82 - 09.88	118	2599	6	M 103.942	**T741C**	**T070B**	**T620B**	orig. / alter. / suppl.
E 1.8	04.90 - 08.93	80	1797	4	M 102.910	**T740C**	**T069B**	**T619B**	orig. / alter. / suppl.
E 2.0	02.85 - 12.86	83	1996	4	M 102.961/M 102.962	**T740C**	**T069B**	**T619B**	orig. / alter. / suppl.
E 2.0	02.85 - 12.86	85	1996	4	M 102.962	**T740C**	**T069B**	**T619B**	orig. / alter. / suppl.
E 2.0	01.85 - 08.93	87	1996	4	M 102.962	**T740C**	**T069B**	**T619B**	orig. / alter. / suppl.
E 2.0	10.82 - 06.93	90	1996	4	M 102.961/M 102.962	**T740C**	**T069B**	**T619B**	orig. / alter. / suppl.
E 2.3	09.86 - 08.91	97	2298	4	M 102.985	**T740C**	**T069B**	**T619B**	orig. / alter. / suppl.
E 2.3	10.86 - 08.93	100	2298	4	M 102.985	**T740C**	**T069B**	**T619B**	orig. / alter. / suppl.
E 2.3-16	09.85 - 12.87	125	2298	4	M 102.983	**T391C**	**T005B**		original / alternative
E 2.3-16	09.85 - 08.88	130	2298	4	M 102.983	**T391C**	**T005B**		original / alternative
E 2.3-16	04.84 - 01.87	136	2298	4	M 102.983	**T391C**	**T005B**		original / alternative
E 2.5-16	03.89 - 08.93	143	2498	4	M 102.991	**T391C**	**T005B**		original / alternative
E 2.5-16	09.88 - 08.93	150	2498	4	M 102.990	**T391C**	**T005B**		original / alternative
E 2.5 Evolution II	05.90 - 08.93	173	2498	4	M 102.992	**T391C**	**T005B**		original / alternative
E 2.6	09.86 - 08.93	118	2597	6	M 103.942	**T741C**	**T070B**	**T620B**	orig. / alter. / suppl.
E 2.6	09.86 - 12.89	122	2597	6	M 103.942	**T741C**	**T070B**	**T620B**	orig. / alter. / suppl.
200 (S123)									
200 T	11.80 - 11.85	74	1997	4	M 102.939	**T740C**	**T069B**	**T619B**	orig. / alter. / suppl.
200 T	11.80 - 11.85	80	1997	4	M 102.920	**T740C**	**T069B**	**T619B**	orig. / alter. / suppl.
200 (S124)									
200 T	01.86 - 05.90	77	1996	4	M 102.922	**T740C**	**T069B**	**T619B**	orig. / alter. / suppl.
200 T	09.85 - 08.89	80	1996	4	M 102.922	**T740C**	**T069B**	**T619B**	orig. / alter. / suppl.
200 TE	09.88 - 08.92	87	1996	4	M 102.963	**T740C**	**T069B**	**T619B**	orig. / alter. / suppl.
200 TE	09.88 - 12.89	90	1996	4	M 102.962	**T740C**	**T069B**	**T619B**	orig. / alter. / suppl.
200 TE	10.92 - 06.93	100	1998	4	M 111.940	**T805C**	**T009B**		original / alternative
200 (W123)									
200	06.80 - 11.85	74	1996	4	M 102.939	**T740C**	**T069B**	**T619B**	orig. / alter. / suppl.
200	06.80 - 11.85	80	1996	4	M 102.920	**T740C**	**T069B**	**T619B**	orig. / alter. / suppl.
200 (W124)									
200	01.86 - 05.90	75	1996	4	M 102.922	**T740C**	**T069B**	**T619B**	orig. / alter. / suppl.
200	01.86 - 05.90	77	1996	4	M 102.922	**T740C**	**T069B**	**T619B**	orig. / alter. / suppl.
200	12.85 - 05.90	80	1996	4	M 102.922	**T740C**	**T069B**	**T619B**	orig. / alter. / suppl.
200 E	09.88 - 08.92	87	1996	4	M 102.963	**T740C**	**T069B**	**T619B**	orig. / alter. / suppl.
200 E	09.88 - 12.89	90	1996	4	M 102.963	**T740C**	**T069B**	**T619B**	orig. / alter. / suppl.
200 E	10.92 - 06.93	100	1998	4	M 111.940	**T805C**	**T009B**		original / alternative
220 (C124)									
220 CE	10.92 - 05.93	110	2199	4	M 111.960	**T805C**	**T009B**		original / alternative
220 (S124)									
220 TE	10.92 - 05.93	110	2199	4	M 111.960	**T805C**	**T009B**		original / alternative
220 (W124)									
220 E	10.92 - 06.93	110	2199	4	M 111.960	**T805C**	**T009B**		original / alternative
230 (C124)									
230 CE	03.87 - 12.92	97	2298	4	M 102.982	**T740C**	**T069B**	**T619B**	orig. / alter. / suppl.

MERCEDES 230 (C124) ▶

model	year	kW	cm³	cyl	engine	I	II	III	info
230 (C124)									
230 CE cat	06.89 - 12.92	97	2298	4	M 102.982	**T740C**	**T069B**	**T619B**	orig. / alter. / suppl.
230 CE	03.87 - 12.92	100	2298	4	M 102.982	**T740C**	**T069B**	**T619B**	orig. / alter. / suppl.
230 (S123)									
230 TE	04.80 - 11.85	100	2299	4	M 102.980	**T740C**	**T069B**	**T619B**	orig. / alter. / suppl.
230 (S124)									
230 TE	09.85 - 08.92	97	2298	4	M 102.982	**T740C**	**T069B**	**T619B**	orig. / alter. / suppl.
230 TE cat	06.89 - 08.92	97	2298	4	M 102.982	**T740C**	**T069B**	**T619B**	orig. / alter. / suppl.
230 TE	09.85 - 08.92	100	2298	4	M 102.982	**T740C**	**T069B**	**T619B**	orig. / alter. / suppl.
230 (W123)									
230 E	04.80 - 12.85	100	2299	4	M 102.980	**T740C**	**T069B**	**T619B**	orig. / alter. / suppl.
230 (W124)									
230 E	12.84 - 03.92	97	2298	4	M 102.982	**T740C**	**T069B**	**T619B**	orig. / alter. / suppl.
230 E	01.85 - 06.93	100	2298	4	M 102.982	**T740C**	**T069B**	**T619B**	orig. / alter. / suppl.
230 E cat	06.89 - 06.93	97	2298	4	M 102.982	**T740C**	**T069B**	**T619B**	orig. / alter. / suppl.
260 (S124)									
260 TE	09.89 - 08.92	118	2597	6	M 103.940	**T741C**	**T070B**	**T620B**	orig. / alter. / suppl.
260 TE	09.85 - 12.89	122	2597	6	M 103.940	**T741C**	**T070B**	**T620B**	orig. / alter. / suppl.
260 (W124)									
260 E	09.85 - 08.92	118	2597	6	M 103.940	**T741C**	**T070B**	**T620B**	orig. / alter. / suppl.
260 E	09.85 - 12.89	122	2597	6	M 103.940	**T741C**	**T070B**	**T620B**	orig. / alter. / suppl.
260 E 4-matic	09.86 - 08.92	118	2597	6	M 103.943	**T741C**	**T070B**	**T620B**	orig. / alter. / suppl.
260 E 4-matic	12.86 - 12.89	122	2597	6	M 103.940	**T741C**	**T070B**	**T620B**	orig. / alter. / suppl.
280 (S123)									
280 TE	09.77 - 11.85	136	2746	6	M 110.988	**T742C**			
280 (S124)									
280 TE	10.92 - 06.93	145	2799	6	M 104.942	**T623C**			semidirect, cable length
	10.92 - 06.93	145	2799	6	M 104.942	**T624C**			semidirect, cable length
280 (W123)									
280	02.76 - 08.81	115	2746	6	M 110.923	**T742C**			
280 E	02.76 - 11.85	136	2746	6	M 110.988/M 110.984	**T742C**			
280 (W124)									
280 E	10.92 - 06.93	145	2799	6	M 104.942	**T623C**			semidirect, cable length
	10.92 - 06.93	145	2799	6	M 104.942	**T624C**			semidirect, cable length
300 (A124)									
300 CE-24	04.92 - 06.93	162	2960	6	M 104.980	**T806C**	**T007B**		original / alternative
300 (C124)									
300 CE	03.87 - 05.93	132	2960	6	M 103.983	**T741C**	**T070B**	**T620B**	orig. / alter. / suppl.
300 CE	03.87 - 12.89	138	2960	6	M 103.983	**T741C**	**T070B**	**T620B**	orig. / alter. / suppl.
300 CE-24	09.89 - 12.92	162	2960	6	M 104.980	**T806C**	**T007B**		original / alternative
300 (S124)									
300 TE	01.86 - 08.92	132	2960	6	M 103.983	**T741C**	**T070B**	**T620B**	orig. / alter. / suppl.
300 TE	01.86 - 12.89	138	2960	6	M 103.983	**T741C**	**T070B**	**T620B**	orig. / alter. / suppl.
300 TE 4-matic	09.86 - 06.93	132	2960	6	M 103.985	**T741C**	**T070B**	**T620B**	orig. / alter. / suppl.
300 TE 4-matic	09.86 - 12.89	138	2960	6	M 103.983	**T741C**	**T070B**	**T620B**	orig. / alter. / suppl.
300 TE-24	09.89 - 08.92	162	2960	6	M 104.980	**T806C**	**T007B**		original / alternative
300 (W124)									
300 E	01.85 - 12.85	138	2960	6	M 103.980	**T741C**	**T070B**	**T620B**	orig. / alter. / suppl.
300 E	06.85 - 08.92	138	2960	6	M 103.983	**T741C**	**T070B**	**T620B**	orig. / alter. / suppl.
300 E	08.85 - 08.92	132	2960	6	M 103.983	**T741C**	**T070B**	**T620B**	orig. / alter. / suppl.
300 E 4-matic	09.86 - 02.92	138	2960	6	M 103.983	**T741C**	**T070B**	**T620B**	orig. / alter. / suppl.
300 E 4-matic	09.86 - 06.93	132	2960	6	M 103.985	**T741C**	**T070B**	**T620B**	orig. / alter. / suppl.
300 E-24	09.88 - 08.92	162	2960	6	M 104.980	**T806C**	**T007B**		original / alternative
320 (C124)									
320 CE	10.92 - 05.93	162	3199	6	M 104.992	**T623C**			semidirect, cable length
	10.92 - 05.93	162	3199	6	M 104.992	**T624C**			semidirect, cable length
320 (S124)									
320 TE	10.92 - 06.93	162	3199	6	M 104.992	**T623C**			semidirect, cable length
	10.92 - 06.93	162	3199	6	M 104.992	**T624C**			semidirect, cable length
320 (W124)									
320 E	10.92 - 06.93	162	3199	6	M 104.992	**T623C**			semidirect, cable length
	10.92 - 06.93	162	3199	6	M 104.992	**T624C**			semidirect, cable length
400 (W124)									
400 E 4.2	10.92 - 06.93	205	4196	8	M 119.975	**T807C**	**T008B**		original / alternative
500 (W124)									
500 E	01.91 - 06.93	240	4973	8	M 119.974	**T807C**	**T008B**		original / alternative
500 E AMG 6.0	01.92 - 06.93	275	5956	8		**T807C**	**T008B**		original / alternative
A-Class (W168)									
A 150	09.04 - 06.12	70	1498	4	M 266.920	**T739C**	**T097B**		original / alternative
A 160	04.09 - 06.12	70	1498	4	M 266.920	**T739C**	**T097B**		original / alternative
A 170	09.04 - 06.12	85	1699	4	M 266.940	**T739C**	**T097B**		original / alternative

MERCEDES A-Class (W168)

model	year	kW	cm³	cyl	engine	I	II	III	info
A-Class (W168)									
A 180	04.09 - 06.12	85	1699	4	M 266.940	**T739C**	**T097B**		original / alternative
A 200	09.04 - 06.12	100	2034	4	M 266.960	**T739C**	**T097B**		original / alternative
A 200 Turbo	09.05 - 06.12	142	2034	4	M 266.980	**T739C**	**T097B**		original / alternative
B-Class (W245)									
B 150	03.05 - 11.11	70	1498	4	M 266.920	**T739C**	**T097B**		original / alternative
B 160	04.09 - 11.11	70	1498	4	M 266.920	**T739C**	**T097B**		original / alternative
B 170	03.05 - 11.11	85	1699	4	M 266.940	**T739C**	**T097B**		original / alternative
B 180	04.09 - 11.11	85	1699	4	M 266.940	**T739C**	**T097B**		original / alternative
B 200	03.05 - 11.11	100	2034	4	M 266.960	**T739C**	**T097B**		original / alternative
B 200 Turbo	03.05 - 11.11	142	2034	4	M 266.980	**T739C**	**T097B**		original / alternative
C-Class (W202)									
C 180	11.94 - 05.00	89	1799	4	M 111.921	**T982C**	**T010B**		orig. / alter.-semidirect
C 180	03.93 - 08.95	90	1799	4	M 111.920	**T805C**	**T009B**		original / alternative
	03.93 - 08.95	90	1799	4	M 111.920	**T626C**			boot design
	09.95 - 05.00	90	1799	4	M 111.921	**T982C**	**T010B**		orig. / alter.-semidirect
C 200	01.94 - 08.95	100	1998	4	M 111.941	**T805C**	**T009B**		original / alternative
	01.94 - 08.95	100	1998	4	M 111.941	**T626C**			boot design
	09.95 - 05.00	100	1998	4	M 111.945	**T982C**	**T010B**		orig. / alter.-semidirect
C 200 Kompr.	10.95 - 05.00	132	1998	4	M 111.944	**T982C**	**T010B**		orig. / alter.-semidirect
C 200 Kompr.	11.96 - 05.00	141	1998	4	M 111.944	**T982C**	**T010B**		orig. / alter.-semidirect
C 220	03.93 - 05.00	110	2199	4	M 111.961	**T805C**	**T009B**		original / alternative
C 230	06.96 - 06.97	110	2295	4	M 111.974	**T982C**	**T010B**		orig. / alter.-semidirect
C 230 Kompr.	10.95 - 05.00	142	2295	4	M 111.975	**T982C**	**T010B**		orig. / alter.-semidirect
C 240	06.97 - 05.00	125	2398	6	M 112.910	**T808C**	**T071B**		original / alternative
C 280	05.93 - 08.95	142	2799	6	M 104.941	**T623C**			semidirect - year
	09.95 - 05.00	142	2799	6	M 104.941	**T624C**			semidirect - year
C 280	06.97 - 05.00	145	2799	6	M 112.920	**T808C**	**T071B**		original / alternative
C 36 AMG	05.94 - 05.00	206	3606	6	M 104.941 (AMG 3.6)	**T623C**			semidirect
C 43 AMG	08.97 - 05.00	225	4266	8	M 113.944	**T809C**	**T072B**		original / alternative
C-Class (W203)									
C 230	01.05 - 02.07	150	2496	6	M 272.920	**T808C**	**T071B**		original / alternative
C 240	05.00 - 02.07	125	2597	6	M 112.912	**T808C**	**T071B**		original / alternative
C 240 4-matic	07.02 - 02.07	125	2597	6	M 112.916	**T808C**	**T071B**		original / alternative
C 32 AMG Kompr.	02.01 - 02.07	260	3199	6	M 112.961	**T808C**	**T071B**		original / alternative
C 320	05.00 - 02.07	160	3199	6	M 112.946	**T808C**	**T071B**		original / alternative
C 320 4-matic	07.02 - 02.07	160	3199	6	M 112.953	**T808C**	**T071B**		original / alternative
C 350	01.05 - 02.07	200	3498	6	M 272.960	**T808C**	**T071B**		original / alternative
C 350 4-matic	01.05 - 02.07	200	3498	6	M 272.970	**T808C**	**T071B**		original / alternative
C 55 AMG	02.04 - 02.07	270	5439	8	M 113.988	**T809C**	**T072B**		original / alternative
C-Class Combi (S202)									
C 180 T	06.96 - 09.00	90	1799	4	M 111.920	**T805C**	**T009B**		original / alternative
	06.96 - 09.00	90	1799	4	M 111.921	**T982C**	**T010B**		orig. / alter.-semidirect
C 200 T	06.96 - 03.01	100	1998	4	M 111.941	**T626C**			
	06.96 - 03.01	100	1998	4	M 111.945	**T982C**	**T010B**		orig. / alter.-semidirect
C 200 T Kompr.	11.96 - 03.01	141	1998	4	M 111.944	**T982C**	**T010B**		orig. / alter.-semidirect
C 230 T	06.96 - 06.98	110	2295	4	M 111.974	**T982C**	**T010B**		orig. / alter.-semidirect
C 230 T Kompr.	06.97 - 09.00	142	2295	4	M 111.975	**T982C**	**T010B**		orig. / alter.-semidirect
C 240 T	06.97 - 09.00	125	2398	6	M 112.910	**T808C**	**T071B**		original / alternative
C 240 T	09.00 - 03.01	125	2597	6	M 112.915	**T808C**	**T071B**		original / alternative
C 280 T	06.97 - 03.01	145	2799	6	M 112.920	**T808C**	**T071B**		original / alternative
C 43 AMG	08.97 - 03.01	225	4266	8	M 113.944	**T809C**	**T072B**		original / alternative
C-Class Coupe (CL203)									
C 32 AMG Kompr.	05.02 - 05.08	260	3199	6	M 112.961	**T808C**	**T071B**		original / alternative
C 320	09.02 - 05.08	160	3199	6	M 112.946	**T808C**	**T071B**		original / alternative
C 350	01.05 - 05.08	200	3498	6	M 272.960	**T808C**	**T071B**		original / alternative
C-Class T-Model (S203)									
C 240	03.01 - 08.07	125	2597	6	M 112.912	**T808C**	**T071B**		original / alternative
C 240 4-matic	07.02 - 08.07	125	2597	6	M 112.916	**T808C**	**T071B**		original / alternative
C 32 AMG Kompr.	03.01 - 08.07	260	3199	6	M 112.961	**T808C**	**T071B**		original / alternative
C 320	03.01 - 08.07	160	3199	6	M 112.946	**T808C**	**T071B**		original / alternative
C 320 4-matic	07.02 - 08.07	160	3199	6	M 112.953	**T808C**	**T071B**		original / alternative
C 350	01.05 - 08.07	200	3498	6	M 272.960	**T808C**	**T071B**		original / alternative
C 350 4-matic	01.05 - 08.07	200	3498	6	M 272.970	**T808C**	**T071B**		original / alternative
C 55 AMG	02.04 - 08.07	270	5439	8	M 113.988	**T809C**	**T072B**		original / alternative
CLK (C208)									
200	06.97 - 06.02	100	1998	4	M 111.941	**T982C**	**T010B**		orig. / alter.-semidirect
200 Kompr.	06.97 - 06.00	141	1998	4	M 111.944	**T982C**	**T010B**		orig. / alter.-semidirect
230 Kompr.	06.97 - 06.00	142	2295	4	M 111.975/M 111.973	**T982C**	**T010B**		orig. / alter.-semidirect
320	06.97 - 06.02	160	3199	6	M 112.940	**T808C**	**T071B**		original / alternative
430	07.98 - 06.02	205	4266	8	M 113.943	**T809C**	**T072B**		original / alternative

MERCEDES CLK (C208) ▶

model	year	kW	cm³	cyl	engine	I	II	III	info
CLK (C208)									
55 AMG	08.99 - 06.02	255	5439	8	M 113.981/M 113.984	**T809C**	**T072B**		original / alternative
CLK (C209)									
240	06.02 - 05.09	125	2597	6	M 112.912	**T808C**	**T071B**		original / alternative
320	06.02 - 05.09	160	3199	6	M 112.955	**T808C**	**T071B**		original / alternative
500	06.06 - 05.09	285	5461	8	M 273.965	**T809C**	**T072B**		original / alternative
500	06.02 - 05.09	225	4966	8	M 113.968	**T809C**	**T072B**		original / alternative
55 AMG	09.02 - 05.09	270	5439	8	M 113.987	**T809C**	**T072B**		original / alternative
CLK DTM AMG	06.04 - 05.09	428	5439	8	M 113.994	**T809C**	**T072B**		original / alternative
CLK Cabriolet (A208)									
200	03.98 - 03.02	100	1998	4	M 111.941	**T982C**	**T010B**		orig. / alter.-semidirect
200 Kompr.	03.98 - 06.00	141	1998	4	M 111.944	**T982C**	**T010B**		orig. / alter.-semidirect
230 Kompr.	03.98 - 06.00	142	2295	4	M 111.975/M 111.973	**T982C**	**T010B**		orig. / alter.-semidirect
320	03.98 - 03.02	160	3199	6	M 112.940	**T808C**	**T071B**		original / alternative
430	09.98 - 03.02	205	4266	8	M 113.943	**T809C**	**T072B**		original / alternative
55 AMG	01.00 - 03.02	255	5439	8	M 113.981/M 113.984	**T809C**	**T072B**		original / alternative
CLK Cabriolet (A209)									
CLK 240	02.03 - 03.10	125	2597	6	M 112.912	**T808C**	**T071B**		original / alternative
CLK 320	02.03 - 03.10	160	3199	6	M 112.955	**T808C**	**T071B**		original / alternative
CLK 500	02.03 - 03.10	225	4966	8	M 113.968	**T809C**	**T072B**		original / alternative
CLK 55 AMG	02.03 - 03.10	270	5439	8	M 113.987	**T809C**	**T072B**		original / alternative
CLS (C219)									
CLS 500	10.04 - 12.10	225	4966	8	M 113.967	**T809C**	**T072B**		original / alternative
CLS 55 AMG	01.05 - 12.10	350	5439	8	M 113.990	**T809C**	**T072B**		original / alternative
E-Class (W124)									
E 200	06.93 - 06.95	100	1998	4	M 111.940	**T805C**	**T009B**		original / alternative
E 220	06.93 - 06.95	110	2199	4	M 111.960	**T805C**	**T009B**		original / alternative
E 280	06.93 - 06.95	142	2799	6	M 104.942	**T623C**			semidirect
E 280	06.93 - 06.95	145	2799	6	M 104.942	**T623C**			semidirect-cable length
	06.93 - 06.95	145	2799	6	M 104.942	**T624C**			semidirect-cable length
E 300 4-matic	06.93 - 06.95	132	2960	6	M 103.985	**T741C**	**T070B**	**T620B**	orig. / alter. / suppl.
E 320	06.93 - 06.95	162	3199	6	M 104.992	**T623C**			semidirect
E 420	06.93 - 06.95	205	4196	8	M 119.975	**T807C**	**T008B**		original / alternative
E 500	06.93 - 06.95	235	4973	8	M 119.974	**T807C**	**T008B**		original / alternative
E 60 AMG	05.94 - 06.95	280	5956	8	M 119.974 AMG	**T807C**	**T008B**		original / alternative
E-Class (W210)									
E 200	06.95 - 08.00	100	1998	4	M 111.942	**T982C**	**T010B**		orig. / alter.-semidirect
E 200 Kompr.	06.97 - 03.02	137	1998	4	M 111.947	**T743C**			semidirect
E 230	06.95 - 06.97	110	2295	4	M 111.970	**T982C**	**T010B**		orig. / alter.-semidirect
E 240	06.97 - 08.00	125	2398	6	M 112.911	**T808C**	**T071B**		original / alternative
E 240	08.00 - 03.02	125	2597	6	M 112.914	**T808C**	**T071B**		original / alternative
E 280	01.96 - 06.97	142	2799	6	M 104.945	**T624C**			semidirect
E 280	12.96 - 03.02	150	2799	6	M 112.921	**T808C**	**T071B**		original / alternative
E 280 4-matic	12.96 - 03.02	150	2799	6	M 112.921	**T808C**	**T071B**		original / alternative
E 320	06.95 - 08.95	162	3199	6	M 104.995	**T623C**			semidirect - year
	09.95 - 06.97	162	3199	6	M 104.995	**T624C**			semidirect - year
E 320	06.97 - 03.02	165	3199	6	M 112.941	**T808C**	**T071B**		original / alternative
E 320 4-matic	06.97 - 03.02	165	3199	6	M 112.941	**T808C**	**T071B**		original / alternative
E 430	06.97 - 03.02	205	4266	8	M 113.940	**T809C**	**T072B**		original / alternative
E 430 4-matic	05.99 - 03.02	205	4266	8	M 113.940	**T809C**	**T072B**		original / alternative
E 55 AMG	08.97 - 03.02	260	5439	8	M 113.980	**T809C**	**T072B**		original / alternative
E 55 AMG 4-matic	03.01 - 03.02	260	5439	8	M 113.980	**T809C**	**T072B**		original / alternative
E-Class (W211)									
E 240	03.02 - 12.08	130	2597	6	M 112.917/M 112.913	**T808C**	**T071B**		original / alternative
E 240 4-matic	03.03 - 12.08	130	2597	6	M 112.917	**T808C**	**T071B**		original / alternative
E 320	03.02 - 12.08	165	3199	6	M 112.949	**T808C**	**T071B**		original / alternative
E 320 4-matic	03.03 - 12.08	165	3199	6	M 112.954	**T808C**	**T071B**		original / alternative
E 500	03.02 - 12.08	225	4966	8	M 113.967	**T809C**	**T072B**		original / alternative
E 500	04.06 - 12.08	285	5461	8	M 273.960	**T809C**	**T072B**		original / alternative
E 500 4-matic	10.03 - 12.08	225	4966	8	M 113.969	**T809C**	**T072B**		original / alternative
E 500 4-mati	04.06 - 12.08	285	5461	8	M 273.962	**T809C**	**T072B**		original / alternative
E 55 AMG Kompr.	10.02 - 12.08	350	5439	8	M 113.990	**T809C**	**T072B**		original / alternative
E-Class Cabriolet (A124)									
E 200	06.93 - 03.98	100	1998	4	M 111.940	**T805C**	**T009B**		original / alternative
E 220	06.93 - 03.98	110	2199	4	M 111.960	**T805C**	**T009B**		original / alternative
E 320	06.93 - 03.98	162	3199	6	M 104.992	**T623C**			semidirect
E 36 AMG	05.94 - 03.98	200	3606	6	M 104.992 (AMG 3.6)	**T623C**			semidirect
E-Class Combi (S124)									
E 200 T	06.93 - 06.96	100	1998	4	M 111.940	**T805C**	**T009B**		original / alternative
E 220 T	06.93 - 06.96	110	2199	4	M 111.960	**T805C**	**T009B**		original / alternative

MERCEDES E-Class Combi (S124)

model	year	kW	cm³	cyl	engine	I	II	III	info
E-Class Combi (S124)									
E 280 T	06.93 - 08.95	142	2799	6	M 104.942	**T623C**			semidirect - year
	09.95 - 06.96	142	2799	6	M 104.942	**T624C**			semidirect - year
E 280 T	06.93 - 08.95	145	2799	6	M 104.942	**T623C**			semidirect - year
	09.95 - 06.96	145	2799	6	M 104.942	**T624C**			semidirect - year
E 300 T 4-matic	06.93 - 06.96	132	2960	6	M 103.985	**T741C**	**T070B**	**T620B**	orig. / alter. / suppl.
E 320 T	06.93 - 08.95	162	3199	6	M 104.992	**T623C**			semidirect - year
	09.95 - 06.96	162	3199	6	M 104.992	**T624C**			semidirect - year
E 36 T AMG	05.94 - 06.96	200	3606	6	M 104.992 (AMG 3.6)	**T623C**			semidirect
E-Class Combi (S210)									
E 200 T	06.96 - 08.00	100	1998	4	M 111.942	**T982C**	**T010B**		orig. / alter.-semidirect
E 200 T Kompr.	06.97 - 03.03	137	1998	4	M 111.947	**T743C**			semidirect
E 230 T	06.96 - 06.97	110	2295	4	M 111.970	**T982C**	**T010B**		orig. / alter.-semidirect
E 240 T	06.97 - 03.03	125	2398	6	M 112.911	**T808C**	**T071B**		original / alternative
E 240 T	08.00 - 03.03	125	2597	6	M 112.914	**T808C**	**T071B**		original / alternative
E 280 T	12.96 - 03.03	150	2799	6	M 112.921	**T808C**	**T071B**		original / alternative
E 280 T 4-matic	12.96 - 03.03	150	2799	6	M 112.921	**T808C**	**T071B**		original / alternative
E 320 T	12.96 - 03.03	165	3199	6	M 112.941	**T808C**	**T071B**		original / alternative
E 320 T 4-matic	12.96 - 03.03	165	3199	6	M 112.941	**T808C**	**T071B**		original / alternative
E 430 T	06.97 - 03.03	205	4266	8	M 113.940	**T809C**	**T072B**		original / alternative
E 430 T 4-matic	05.99 - 03.03	205	4266	8	M 113.940	**T809C**	**T072B**		original / alternative
E 55 T AMG	08.97 - 03.03	260	5439	8	M 113.980	**T809C**	**T072B**		original / alternative
E 55 T AMG 4-matic	03.01 - 03.03	260	5439	8	M 113.980	**T809C**	**T072B**		original / alternative
E-Class Coupe (C124)									
E 200	06.93 - 06.97	100	1998	4	M 111.940	**T805C**	**T009B**		original / alternative
E 220	06.93 - 06.97	110	2199	4	M 111.960	**T805C**	**T009B**		original / alternative
E 320	06.93 - 08.95	162	3199	6	M 104.992	**T623C**			semidirect - year
	09.95 - 06.97	162	3199	6	M 104.992	**T624C**			semidirect - year
E 36 AMG	05.94 - 06.97	200	3606	6	M 104.992 (AMG 3.6)	**T623C**			semidirect
E 36 AMG	06.93 - 04.95	195	3606	6	M 104.992 (AMG 3.6)	**T623C**			semidirect
E-Class T-Model (S211)									
E 240 T	03.03 - 07.09	130	2597	6	M 112.913	**T808C**	**T071B**		original / alternative
E 240 T 4-matic	07.03 - 07.09	130	2597	6	M 112.917	**T808C**	**T071B**		original / alternative
E 320 T	03.03 - 07.09	165	3199	6	M 112.949	**T808C**	**T071B**		original / alternative
E 320 T 4-matic	07.03 - 07.09	165	3199	6	M 112.954	**T808C**	**T071B**		original / alternative
E 500 T	10.03 - 07.09	225	4966	8	M 113.967	**T809C**	**T072B**		original / alternative
E 500 T	04.06 - 07.09	285	5461	8	M 273.960	**T809C**	**T072B**		original / alternative
E 500 T 4-matic	10.03 - 07.09	225	4966	8	M 113.969	**T809C**	**T072B**		original / alternative
E 500 T 4-matic	04.06 - 07.09	285	5461	8	M 273.962	**T809C**	**T072B**		original / alternative
E 55 T AMG Kompr.	07.03 - 07.09	350	5439	8	M 113.990	**T809C**	**T072B**		original / alternative
G-Class (W460)									
230 GE	05.87 - 08.92	90	2298	4	M 102.979/M 102.987	**T740C**	**T069B**	**T619B**	orig. / alter. / suppl.
230 GE	04.82 - 08.92	92	2299	4	M 102.987/_ .981/_ .989	**T740C**	**T069B**	**T619B**	orig. / alter. / suppl.
G-Class (W461)									
230 GE	02.93 -	90	2298	4	M 102.979	**T740C**	**T069B**	**T619B**	orig. / alter. / suppl.
230 GE	06.93 -	92	2298	4	M 102.996/M 102.997	**T740C**	**T069B**	**T619B**	orig. / alter. / suppl.
G-Class (W463)									
230 GE	06.90 - 06.93	93	2298	4	M 102.989	**T740C**	**T069B**	**T619B**	orig. / alter. / suppl.
300 GE	06.90 -	125	2960	6	M 103.987	**T741C**	**T070B**	**T620B**	orig. / alter. / suppl.
300 GE	06.90 -	128	2960	6	M 103.987	**T741C**	**T070B**	**T620B**	orig. / alter. / suppl.
G 320	09.94 - 12.97	155	3199	6	M 104.996	**T624C**			semidirect
G 320	07.97 -	158	3199	6	M 112.945	**T808C**	**T071B**		original / alternative
G 500	04.98 -	218	4966	8	M 113.962	**T809C**	**T072B**		original / alternative
G 500 E	09.93 -	177	4973	8	M 117.965	**T807C**	**T008B**		original / alternative
G 55 AMG	04.99 -	260	5439	8	M 113.982	**T809C**	**T072B**		original / alternative
G 55 AMG	06.04 -	350	5439	8	M 113.993	**T809C**	**T072B**		original / alternative
G 55 AMG	08.06 -	368	5439	8	M 113.993	**T809C**	**T072B**		original / alternative
G 55 AMG	08.08 -	373	5439	8	M 113.993	**T809C**	**T072B**		original / alternative
G-Class Cabrio (W463)									
230 GE	06.90 - 02.93	93	2298	4	M 102.989	**T740C**	**T069B**	**T619B**	orig. / alter. / suppl.
300 GE	09.89 - 09.97	125	2960	6	M 103.987	**T741C**	**T070B**	**T620B**	orig. / alter. / suppl.
320 GE	09.94 - 11.97	155	3199	6	M 104.996	**T624C**			semidirect
G 320	11.97 -	158	3199	6	M 112.945	**T808C**	**T071B**		original / alternative
G 500	04.98 -	218	4966	8	M 113.962	**T809C**	**T072B**		original / alternative
M-Class (W163)									
ML 230	02.98 - 06.05	110	2295	4	M 111.977	**T743C**			semidirect
ML 320	02.98 - 08.02	160	3199	6	M 112.942	**T808C**	**T071B**		original / alternative
ML 350	02.03 - 06.05	173	3724	6	M 112.970	**T808C**	**T071B**		original / alternative
ML 350	08.02 - 06.05	180	3724	6	M 112.970	**T808C**	**T071B**		original / alternative
ML 430	02.98 - 06.05	200	4266	8	M 113.942	**T809C**	**T072B**		original / alternative
ML 500	09.01 - 06.05	215	4966	8	M 113.964/M 113.965	**T809C**	**T072B**		original / alternative

MERCEDES M-Class (W163) ▶

model	year	kW	cm³	cyl	engine	I	II	III	info
M-Class (W163)									
ML 55 AMG	02.00 - 06.05	255	5439	8	M 113.981	**T809C**	**T072B**		original / alternative
M-Class (W164)									
ML 500 4-matic	07.05 -	225	4966	8	M 113.964	**T809C**	**T072B**		original / alternative
R-Class (W251, V251)									
R 500 4-matic	01.06 -	225	4966	8	M 113.971	**T809C**	**T072B**		original / alternative
S-Class (W116)									
280 S	08.72 - 07.80	115	2746	6	M 110.922	**T742C**			
280 SE,SEL	08.72 - 07.80	136	2746	6	M 110.985	**T742C**			
450 SE,SEL	12.75 - 04.80	160	4520	8	M 117.986/M 117.985	**T931C**	**T087B**		original / alternative
450 SEL 6.9	07.75 - 03.80	210	6834	8	M 100.985	**T931C**	**T087B**		original / alternative
S-Class (W126)									
260 SE	09.85 - 06.91	118	2597	6	M 103.941	**T741C**	**T070B**	**T620B**	orig. / alter. / suppl.
260 SE	09.85 - 06.91	122	2597	6	M 103.941	**T741C**	**T070B**	**T620B**	orig. / alter. / suppl.
280 S	12.79 - 07.85	115	2746	6	M 110.926/M 110.924	**T742C**			
280 SE,SEL	10.79 - 07.85	136	2746	6	M 110.987/M 110.989	**T742C**			
300 SE,SEL	01.86 - 06.91	132	2960	6	M 103.981	**T741C**	**T070B**	**T620B**	orig. / alter. / suppl.
300 SE,SEL	09.85 - 12.89	138	2960	6	M 103.981	**T741C**	**T070B**	**T620B**	orig. / alter. / suppl.
380 SE,SEL	12.79 - 08.85	150	3839	8	M 116.963	**T932C**	**T001B**		original / alternative
380 SE,SEL	12.85 - 12.86	160	3839	8	M 116.961	**T932C**	**T001B**		original / alternative
420 SE,SEL	10.85 - 06.91	150	4196	8	M 116.965	**T971C**	**T058B**		original / alternative
420 SE,SEL	10.85 - 12.87	160	4196	8	M 116.965	**T971C**	**T058B**		original / alternative
420 SE,SEL	10.85 - 06.91	165	4196	8	M 116.965	**T971C**	**T058B**		original / alternative
420 SE,SEL	10.85 - 12.87	170	4196	8	M 116.965	**T971C**	**T058B**		original / alternative
500 SE,SEL	09.85 - 06.91	164	4973	8	M 117.965	**T971C**	**T058B**		original / alternative
500 SE,SEL	12.79 - 08.85	170	4973	8	M 117.961/M 117.963	**T932C**	**T001B**		original / alternative
500 SE,SEL	12.79 - 08.85	177	4973	8	M 117.961/M 117.963	**T932C**	**T001B**		original / alternative
500 SE,SEL	09.85 - 06.91	180	4973	8	M 117.965	**T971C**	**T058B**		original / alternative
500 SE,SEL	09.87 - 06.91	185	4973	8	M 117.965	**T971C**	**T058B**		original / alternative
500 SE,SEL	09.87 - 06.91	195	4973	8	M 117.965	**T971C**	**T058B**		original / alternative
500 SE,SEL cat	06.89 - 06.91	185	4973	8	M 117.965	**T971C**	**T058B**		original / alternative
560 SE,SEL	10.85 - 06.91	178	5547	8	M 117.968	**T971C**	**T058B**		original / alternative
560 SE,SEL	10.85 - 12.87	200	5547	8	M 117.968	**T971C**	**T058B**		original / alternative
560 SE,SEL	08.87 - 06.91	205	5547	8	M 117.968	**T971C**	**T058B**		original / alternative
560 SE,SEL	10.85 - 06.91	220	5547	8	M 117.968	**T971C**	**T058B**		original / alternative
S-Class (W140)									
300 SE 2.8	02.93 - 08.95	145	2799	6	M 104.944	**T623C**			semidirect - year
	09.95 - 10.98	145	2799	6	M 104.944	**T624C**			semidirect - year
300 SE,SEL/S320	03.91 - 10.98	170	3199	6	M 104.994	**T623C**			semidirect
	03.91 - 10.98	170	3199	6	M 104.990	**T806C**	**T007B**		original / alternative
400 SE,SEL/S420	02.91 - 10.98	210	4196	8	M 119.971	**T807C**	**T008B**		original / alternative
500	02.91 - 10.98	240	4973	8	M 119.970	**T807C**	**T008B**		original / alternative
600	04.91 - 12.92	300	5987	12	M 120.982/M 120.980	**T390C**	**T024B**		original / alternative
S 280	02.93 - 08.95	142	2799	6	M 104.944	**T623C**			semidirect - year
	09.95 - 10.98	142	2799	6	M 104.944	**T624C**			semidirect - year
S 420	01.93 - 10.98	205	4196	8	M 119.971	**T807C**	**T008B**		original / alternative
S 500	01.93 - 10.98	235	4973	8	M 119.970	**T807C**	**T008B**		original / alternative
S 600	01.93 - 10.98	290	5987	12	M 120.982/M 120.980	**T390C**	**T024B**		original / alternative
S-Class (W220)									
S 280	10.98 - 08.05	150	2799	6	M 112.922	**T808C**	**T071B**		original / alternative
S 320	10.98 - 08.05	165	3199	6	M 112.944	**T808C**	**T071B**		original / alternative
S 350	09.02 - 08.05	180	3724	6	M 112.972	**T808C**	**T071B**		original / alternative
S 350 4-matic	06.03 - 08.05	180	3724	6	M 112.975	**T808C**	**T071B**		original / alternative
S 430	10.98 - 08.05	205	4266	8	M 113.941	**T809C**	**T072B**		original / alternative
S 430 4-matic	09.02 - 08.05	205	4266	8	M 113.948	**T809C**	**T072B**		original / alternative
S 500	10.98 - 08.05	225	4966	8	M 113.960	**T809C**	**T072B**		original / alternative
S 500 4-matic	09.02 - 08.05	225	4966	8	M 113.966	**T809C**	**T072B**		original / alternative
S 55 AMG	04.99 - 08.05	265	5439	8	M 113.986	**T809C**	**T072B**		original / alternative
S 55 AMG Kompr.	06.02 - 08.05	368	5439	8	M 113.991	**T809C**	**T072B**		original / alternative
S-Class Coupe (C126)									
380 SEC	10.81 - 07.85	150	3839	8	M 116.963	**T932C**	**T001B**		original / alternative
420 SEC	10.85 - 06.91	150	4196	8	M 116.965	**T971C**	**T058B**		original / alternative
420 SEC	10.85 - 12.87	160	4196	8	M 116.965	**T971C**	**T058B**		original / alternative
420 SEC	10.85 - 06.91	165	4196	8	M 116.965	**T971C**	**T058B**		original / alternative
500 SEC	10.85 - 06.91	164	4973	8	M 117.965	**T971C**	**T058B**		original / alternative
500 SEC	10.81 - 08.85	170	4973	8	M 117.963	**T932C**	**T001B**		original / alternative
500 SEC	09.85 - 06.91	180	4973	8	M 117.965	**T971C**	**T058B**		original / alternative
500 SEC	08.87 - 06.91	185	4973	8	M 117.965	**T971C**	**T058B**		original / alternative
500 SEC	09.85 - 06.91	195	4973	8	M 117.965	**T971C**	**T058B**		original / alternative
500 SEC cat	06.89 - 06.91	185	4973	8	M 117.965	**T971C**	**T058B**		original / alternative
560 SEC	10.85 - 06.91	178	5547	8	M 117.968	**T971C**	**T058B**		original / alternative

MERCEDES S-Class Coupe (C126)

model	year	kW	cm³	cyl	engine	I	II	III	info
S-Class Coupe (C126)									
560 SEC	10.85 - 12.87	200	5547	8	M 117.968	**T971C**	**T058B**		original / alternative
560 SEC	10.85 - 06.91	205	5547	8	M 117.968	**T971C**	**T058B**		original / alternative
560 SEC	10.85 - 12.89	220	5547	8	M 117.968	**T971C**	**T058B**		original / alternative
S-Class Coupe (C140)									
SEC/CL 420	10.94 - 02.99	205	4196	8	M 119.971	**T807C**	**T008B**		original / alternative
SEC/CL 500	10.92 - 02.99	235	4973	8	M 119.970	**T807C**	**T008B**		original / alternative
SEC/CL 600	09.92 - 02.99	290	5987	12	M 120.982/M 120.980	**T390C**	**T024B**		original / alternative
S-Class Coupe (C215)									
CL 500	03.99 - 03.06	225	4966	8	M 113.960	**T809C**	**T072B**		original / alternative
CL 55 AMG	10.99 - 03.06	265	5439	8	M 113.986	**T809C**	**T072B**		original / alternative
CL 55 AMG Kompr.	06.02 - 03.06	368	5439	8	M 113.991	**T809C**	**T072B**		original / alternative
SL (R107)									
280 SL	08.74 - 07.85	136	2746	6	M 110.986/_ .990/_ .982	**T742C**			
300 SL	09.85 - 08.89	132	2960	6	M 103.982	**T741C**	**T070B**	**T620B**	orig. / alter. / suppl.
300 SL	09.85 - 08.89	138	2960	6	M 103.982	**T741C**	**T070B**	**T620B**	orig. / alter. / suppl.
380 SL	09.80 - 08.85	150	3839	8	M 116.962	**T932C**	**T001B**		original / alternative
380 SL	09.80 - 08.81	160	3818	8	M 116.960	**T932C**	**T001B**		original / alternative
420 SL	01.86 - 08.89	150	4196	8	M 116.964	**T971C**	**T058B**		original / alternative
420 SL	01.86 - 08.89	160	4196	8	M 116.964	**T971C**	**T058B**		original / alternative
450 SL	09.75 - 10.80	160	4520	8	M 117.985/M 117.982	**T931C**	**T087B**		original / alternative
500 SL	01.86 - 08.89	164	4973	8	M 117.964	**T971C**	**T058B**		original / alternative
500 SL	05.80 - 12.85	170	4973	8	M 117.960	**T932C**	**T001B**		original / alternative
500 SL	05.80 - 12.81	177	4973	8	M 117.960	**T932C**	**T001B**		original / alternative
500 SL	01.86 - 08.89	180	4973	8	M 117.964/M 117.960	**T932C**	**T001B**		original / alternative
SL (R129)									
280	02.93 - 08.95	142	2799	6	M 104.943	**T623C**			semidirect - year
	09.95 - 10.98	142	2799	6	M 104.943	**T624C**			semidirect - year
280	05.98 - 10.01	150	2799	6	M 112.923	**T808C**	**T071B**		original / alternative
300 SL	03.89 - 08.93	140	2960	6	M 103.984	**T741C**	**T070B**	**T620B**	orig. / alter. / suppl.
300 SL	03.89 - 07.93	170	2960	6	M 104.981	**T806C**	**T007B**		original / alternative
320	02.93 - 08.95	170	3199	6	M 104.991	**T623C**			semidirect - year
	09.95 - 10.98	170	3199	6	M 104.991	**T624C**			semidirect - year
320	05.98 - 10.01	165	3199	6	M 112.943	**T808C**	**T071B**		original / alternative
500	09.92 - 10.01	235	4973	8	M 119.972	**T807C**	**T008B**		original / alternative
500	05.98 - 10.01	225	4966	8	M 113.961	**T809C**	**T072B**		original / alternative
55 AMG	03.00 - 10.01	260	5439	8	M 113.985	**T809C**	**T072B**		original / alternative
600	07.92 - 10.01	290	5987	12	M 120.981	**T390C**	**T024B**		original / alternative
SL (R230)									
350	03.03 - 01.12	180	3724	6	M 112.973	**T808C**	**T071B**		original / alternative
500	10.01 - 01.12	225	4966	8	M 113.963	**T809C**	**T072B**		original / alternative
500	03.06 - 01.12	285	5461	8	M 273.965	**T809C**	**T072B**		original / alternative
55 AMG	03.06 - 01.12	380	5439	8	M 113.995	**T809C**	**T072B**		original / alternative
55 AMG	10.01 - 06.02	350	5439	8	M 113.992	**T809C**	**T072B**		original / alternative
55 AMG Kompr.	06.02 - 01.12	368	5439	8	M 113.992	**T809C**	**T072B**		original / alternative
SL Coupe (C107)									
380 SLC	07.80 - 08.81	160	3818	8	M 116.960	**T932C**	**T001B**		original / alternative
450 SLC	09.75 - 08.79	160	4520	8	M 117.985/M 117.982	**T931C**	**T087B**		original / alternative
450 SLC	06.78 - 02.80	177	4973	8	M 117.960	**T931C**	**T087B**		original / alternative
SLK (R170)									
200	09.96 - 03.00	100	1998	4	M 111.946	**T982C**	**T010B**		orig. / alter.-semidirect
200 Kompr.	03.00 - 04.04	120	1998	4	M 111.958	**T743C**			semidirect
200 Kompr.	10.96 - 03.00	141	1998	4	M 111.943	**T982C**	**T010B**		orig. / alter.-semidirect
230 Kompr.	09.96 - 03.00	142	2295	4	M 111.973	**T982C**	**T010B**		orig. / alter.-semidirect
32 AMG Kompr.	03.01 - 04.04	260	3199	6	M 112.960	**T808C**	**T071B**		original / alternative
320	03.00 - 04.04	160	3199	6	M 112.947	**T808C**	**T071B**		original / alternative
SLK (R171)									
55 AMG	06.04 - 02.11	265	5439	8	M 113.989	**T809C**	**T072B**		original / alternative
SLR (R199)									
5.4	04.04 -	460	5439	8	M 155.980	**T809C**	**T072B**		original / alternative
5.4 722 Edition	10.06 -	478	5439	8	M 155.980	**T809C**	**T072B**		original / alternative
SLR Roadster (R199)									
5.4	04.07 -	460	5439	8	M 155.980	**T809C**	**T072B**		original / alternative
5.4	10.06 -	478	5439	8	M 155.980	**T809C**	**T072B**		original / alternative
Sprinter 2-t Bus (901, 902)									
214	02.95 - 05.06	105	2295	4	M 111.979	**T982C**	**T010B**		orig. / alter.-semidirect
214 NGT	04.00 - 05.06	92	2295	4	M 111.984	**T743C**			semidirect
Sprinter 2-t Flatbed (901, 902)									
214	02.95 - 05.06	105	2295	4	M 111.979	**T982C**	**T010B**		orig. / alter.-semidirect
214 NGT	04.00 - 05.06	92	2295	4	M 111.984	**T743C**			semidirect

MERCEDES Sprinter 2-t Van

model	year	kW	cm³	cyl	engine	I	II	III	info
Sprinter 2-t Van (901, 902)									
214	02.95 - 05.06	105	2295	4	M 111.979/M 111.984	**T982C**	**T010B**		orig. / alter.-semidirect
214 NGT	04.00 - 05.06	92	2295	4	M 111.984	**T743C**			semidirect
Sprinter 3-t Bus (903)									
314	02.95 - 05.06	105	2295	4	M 111.984	**T982C**	**T010B**		orig. / alter.-semidirect
314 4x4	08.02 - 05.06	105	2295	4	M 111.984	**T982C**	**T010B**		orig. / alter.-semidirect
314 NGT	04.00 - 05.06	92	2295	4	M 111.984	**T743C**			semidirect
Sprinter 3-t Flatbed (903)									
314	02.95 - 05.06	105	2295	4	M 111.984	**T982C**	**T010B**		orig. / alter.-semidirect
314 4x4	08.02 - 05.06	105	2295	4	M 111.984	**T982C**	**T010B**		orig. / alter.-semidirect
314 NGT	04.00 - 05.06	92	2295	4	M 111.984	**T743C**			semidirect
Sprinter 3-t Van (903)									
314	02.95 - 05.06	105	2295	4	M 111.979/M 111.984	**T982C**	**T010B**		orig. / alter.-semidirect
314 4x4	08.02 - 05.06	105	2295	4	M 111.984	**T982C**	**T010B**		orig. / alter.-semidirect
314 NGT	04.00 - 05.06	92	2295	4	M 111.984	**T743C**			semidirect
Sprinter 4-t Bus (904)									
414	02.96 - 05.06	105	2295	4	M 111.979	**T982C**	**T010B**		orig. / alter.-semidirect
Sprinter 4-t Flatbed (904)									
414	02.96 - 05.06	105	2295	4	M 111.979	**T982C**	**T010B**		orig. / alter.-semidirect
414 4x4	05.97 - 05.06	105	2295	4	M 111.979	**T982C**	**T010B**		orig. / alter.-semidirect
Sprinter 4-t Van (904)									
414	02.96 - 05.06	105	2295	4	M 111.979	**T982C**	**T010B**		orig. / alter.-semidirect
414 4x4	05.97 - 05.06	105	2295	4	M 111.979	**T982C**	**T010B**		orig. / alter.-semidirect
V-Class (638/2)									
V 200	02.97 - 07.03	95	1998	4	M 111.948/M 111.950	**T982C**	**T010B**		orig. / alter.-semidirect
V 230	10.96 - 07.03	105	2295	4	M 111.978	**T982C**	**T010B**		orig. / alter.-semidirect
V 280	08.97 - 07.03	128	2792	6	M 104.900	**T622C**	**T022B**		original / alternative
Viano (W639)									
3.0	09.03 -	140	3199	6	M 112.951	**T808C**	**T071B**		original / alternative
3.2	09.03 -	160	3199	6	M 112.951	**T808C**	**T071B**		original / alternative
3.7	06.04 -	170	3724	6	M 112.976	**T808C**	**T071B**		original / alternative
Vito / Mixto Van (W639)									
119	09.03 -	140	3199	6	M 112.951	**T808C**	**T071B**		original / alternative
122	09.03 -	160	3199	6	M 112.951	**T808C**	**T071B**		original / alternative
Vito Bus (638)									
113 2.0	02.96 - 07.03	95	1998	4	M 111.948/M 111.950	**T982C**	**T010B**		orig. / alter.-semidirect
114 2.3	12.96 - 07.03	105	2295	4	M 111.978	**T982C**	**T010B**		orig. / alter.-semidirect
Vito Bus (W639)									
119	09.03 -	140	3199	6	M 112.951	**T808C**	**T071B**		original / alternative
122	09.03 -	160	3199	6	M 112.951	**T808C**	**T071B**		original / alternative
123	06.04 -	170	3724	6	M 112.976	**T808C**	**T071B**		original / alternative
Vito Van (638)									
113 2.0	03.97 - 07.03	95	1998	4	M 111.948/M 111.950	**T982C**	**T010B**		orig. / alter.-semidirect
114 2.3	03.97 - 07.03	105	2295	4	M 111.978	**T982C**	**T010B**		orig. / alter.-semidirect
MG									
MG TF									
115	03.02 -	85	1588	4	16 K4F	**T564B**			with distributor
	03.02 -	85	1588	4	16 K4F	**T565B**			semidirect
120	03.02 -	88	1796	4	18 K4F	**T564B**			with distributor
	03.02 -	88	1796	4	18 K4F	**T565B**			semidirect
135	03.02 -	100	1796	4	18 K4F	**T564B**			with distributor
	03.02 -	100	1796	4	18 K4F	**T565B**			semidirect
160	03.02 -	118	1796	4	18 K4K	**T565B**			semidirect
MG ZR									
105	06.01 - 04.05	76	1396	4	14 K4F	**T564B**			with distributor
	06.01 - 04.05	76	1396	4	14 K4F	**T565B**			semidirect
120	06.01 - 04.05	86	1796	4	18 K4F	**T564B**			with distributor
	06.01 - 04.05	86	1796	4	18 K4F	**T565B**			semidirect
160	06.01 - 04.05	118	1796	4	18 K4K	**T565B**			semidirect
MG ZS									
120	07.01 - 04.05	86	1796	4	18 K4F	**T565B**			semidirect
180	07.01 - 04.05	130	2497	6	25 K4F	**T365C**			semidirect
MG ZS Hatchback									
120	07.01 - 10.05	86	1796	4	18 K4F	**T565B**			semidirect
180	07.01 - 10.05	130	2497	6	25 K4F	**T365C**			semidirect
MG ZT									
180	01.03 - 07.05	130	2497	6	25 K4F	**T365C**			semidirect
MG ZT- T									
180	01.03 - 07.05	130	2497	6	25 K4F	**T365C**			semidirect

MG MGF (RD) ▶

model	year	kW	cm³	cyl	engine	I	II	III	info
MGF (RD)									
1.6	02.00 - 03.02	82	1588	4	16 K4F	**T564B**			
1.8 i 16V	03.95 - 03.02	88	1796	4	18 K4F	**T564B**			with distributor
	03.95 - 03.02	88	1796	4	18 K4F	**T565B**			semidirect
1.8 i VVC	03.95 - 03.02	107	1796	4	18 K4K	**T565B**			semidirect
1.8 i VVC	10.01 - 03.02	118	1796	4	18 K4K	**T565B**			semidirect
MINI									
Mini (R50, R53)									
1.4 One	04.03 - 09.06	55	1398	4	W10B14A	**T116B**			
1.6 Cooper	06.01 - 09.06	85	1598	4	W10B16A	**T116B**			
1.6 Cooper S	03.02 - 09.06	120	1598	4	W11B16A	**T116B**			
1.6 Cooper S	07.04 - 09.06	125	1598	4	W11B16A	**T116B**			
1.6 One	06.01 - 09.06	66	1598	4	W10B16A	**T116B**			
1.6 Works	11.03 - 09.06	155	1598	4	W11B16A	**T116B**			
Mini Cabriolet (R52)									
1.6 Cooper	07.04 - 11.07	85	1598	4	W10B16A	**T116B**			
1.6 Cooper S	07.04 - 11.07	125	1598	4	W11B16A	**T116B**			
1.6 J. Cooper Works	07.04 - 11.07	155	1598	4	W11B16A	**T116B**			
1.6 One	07.04 - 11.07	66	1598	4	W10B16A	**T116B**			
MITSUBISHI									
3000 GT									
3.0 i 24V 4WD	06.92 - 08.99	210	2972	6	6G72 (DOHC 24V)	**T531B**			
Carisma (DA_)									
1.6	07.95 - 04.96	66	1597	4	4G92	**T503B**			
	05.96 - 06.06	66	1597	4	4G92	**T533P**			semidirect
1.6	12.98 - 12.99	70	1597	4	4G92	**T503B**			
	01.00 - 06.06	70	1597	4	4G92	**T533P**			semidirect
1.6	05.97 - 06.06	73	1597	4	4G92	**T533P**			semidirect
1.6	09.00 - 06.06	76	1597	4	4G92	**T533P**			semidirect
1.8	07.95 - 04.96	85	1834	4	4G93	**T503B**			
	05.96 - 06.06	85	1834	4	4G93	**T533P**			semidirect
1.8 16V	07.95 - 06.06	103	1834	4	4G93	**T533P**			semidirect
Carisma Sedan (DA_)									
1.3	09.00 - 10.04	55	1298	4	4G13 (12V)	**T539P**			semidirect
1.6	09.96 - 06.06	66	1597	4	4G92	**T533P**			semidirect
1.6	12.98 - 12.99	70	1597	4	4G92	**T503B**			
	01.00 - 06.06	70	1597	4	4G92	**T533P**			semidirect
1.6	05.97 - 06.06	73	1597	4	4G92	**T533P**			semidirect
1.6	09.00 - 06.06	76	1597	4	4G92	**T533P**			semidirect
1.8	09.96 - 06.06	85	1834	4	4G93	**T533P**			semidirect
Colt I (A15_A)									
1.4 GLX	05.79 - 01.84	51	1410	4	4G12	**T252B**			
1.4 Turbo	09.81 - 01.84	77	1410	4	4G12 T	**T252B**			
Colt II (C1_A)									
1.2 EL,GL	02.84 - 09.86	40	1198	4	4G16	**T250B**			
1.2 EL,GL	09.86 - 04.88	44	1198	4	4G16	**T250B**			
1.3 EL,GL	06.86 - 04.88	49	1299	4	G13B	**T901B**			
1.5 GLX	09.85 - 04.88	51	1468	4	G15B	**T250B**			
1.5 GLX	09.84 - 04.88	55	1468	4	4G15	**T250B**			
1.6 Turbo Eci	02.84 - 04.88	92	1597	4	4G32 T/C	**T252B**			
Colt III (C5_A)									
1.3	04.88 - 05.92	51	1299	4	4G13 (8V)	**T250B**			
1.3 12V	04.88 - 05.92	55	1299	4	4G13 (12V)	**T250B**			
1.3 GL	04.88 - 12.90	44	1299	4	4G13 (8V)	**T250B**			
1.5 cat	07.90 - 05.92	66	1468	4	4G15 (12V)	**T250B**			
1.5 GLXi	04.88 - 05.92	62	1468	4	4G15	**T250B**			
1.6 GTi 16V	04.88 - 05.90	91	1596	4	4G61	**T902B**			
1.8 GTi 16V cat	06.90 - 05.92	100	1836	4	4G67	**T902B**			
Colt IV (CA_A)									
1.3 GLi 12V	04.92 - 04.96	55	1299	4	4G13 (12V)	**T901B**			
1.6	02.94 - 02.96	66	1597	4	4G92	**T502B**			
	03.96 - 04.96	66	1597	4	4G92	**T533P**			semidirect
1.6 4WD	08.93 - 08.95	84	1597	4	4G92	**T502B**			
1.6 GLXi 16V	04.92 - 04.96	83	1597	4	4G92	**T502B**			
1.8 GTi 16V	04.92 - 04.96	103	1834	4	4G93	**T505B**			
Colt V (CJ_, CP_)									
1300	09.00 - 09.03	60	1299	4	4G13 (16V)	**T539P**			semidirect
1300 GL,GLX	05.96 - 09.00	55	1299	4	4G13 (12V)	**T539P**			semidirect
	05.96 - 09.00	55	1299	4	4G13 (12V)	**T901B**			DIN

MITSUBISHI Colt V (CJ_, CP_) ▶

model	year	kW	cm³	cyl	engine	I	II	III	info
Colt V (CJ_, CP_)									
1500	11.95 - 09.03	69	1468	4	4G15 (16V)	**T901B**			
1600	09.00 - 09.03	76	1597	4	4G92	**T533P**			semidirect
1600 GLX	05.96 - 09.00	66	1597	4	4G92	**T533P**			semidirect
Diamante Sedan (F2_A, F1_A)									
3.0	10.92 - 07.96	151	2972	6	6G72 (DOHC 24V)	**T532B**			
Eclipse Cabriolet									
1.8	12.89 - 03.94	68	1755	4	4G37	**T252B**			
Eclipse I (D2_A)									
1.8	12.89 - 03.94	68	1755	4	4G37	**T252B**			
2.0 i 16V	04.91 - 11.95	110	1997	4	4G63 (DOHC 16V)	**T902B**			
2.0 i 16V 4WD	04.91 - 11.95	110	1997	4	4G63 (DOHC 16V)	**T902B**			
2.0 Turbo 4WD	12.89 - 03.94	157	1997	4		**T902B**			
Eclipse II (D3_A)									
2.0 Turbo 4WD	12.95 - 04.99	157	1997	4		**T252B**			
2000 GS 16V	12.95 - 04.99	107	1997	4	4G63 (DOHC 16V)	**T903B**			
2000 GT 16V	12.95 - 04.99	157	1997	4		**T252B**			
Galant II (A16_)									
1.6 GLX	09.80 - 05.84	55	1597	4	4G32	**T487B**			
2.0 GLS	09.80 - 05.84	75	1997	4	4G63 (SOHC 8V)	**T487B**			
2.0 Turbo Eci	05.82 - 05.84	125	1997	4	4G63 T (ECI)	**T487B**			
Galant II Station Wagon (A16_V)									
1.6 GLX	09.80 - 05.84	55	1597	4	4G32	**T487B**			
2.0 GLX	09.80 - 06.83	75	1997	4	4G63 (SOHC 8V)	**T487B**			
Galant III (E1_A)									
1.6 GLX	06.84 - 04.90	55	1597	4	4G32	**T903B**			
2.0 GLS	06.84 - 04.90	75	1997	4	4G63 (SOHC 8V)	**T487B**			
2.0 Turbo Eci	06.84 - 04.90	110	1997	4	4G63 T (SOHC 8V)	**T487B**			
2.4 GLS	07.85 - 04.90	82	2351	4	G64B	**T974B**			
Galant IV (E3_A)									
1.8	11.88 - 10.92	66	1755	4	4G37	**T252B**			
2.0	04.89 - 10.92	80	1997	4	4G63 (SOHC 8V)	**T974B**			
2.0 4WD	04.89 - 10.92	80	1997	4	4G63 (SOHC 8V)	**T974B**			
2.0 GTI 16V	11.88 - 10.92	106	1997	4	4G63 (DOHC 16V)	**T903B**			
2.0 GTI 16V	11.88 - 10.92	107	1997	4	4G63 (DOHC 16V)	**T903B**			
2.0 GTI 16V 4x4	07.89 - 12.92	106	1997	4	4G63 (DOHC 16V)	**T903B**			
Galant IV Sedan (E3_A)									
1.8 (E32A)	11.87 - 08.90	63	1755	4	4G37	**T252B**			
1.8 (E32A)	11.87 - 10.92	66	1755	4	4G37	**T252B**			
2.0	11.87 - 10.92	80	1997	4	4G63 (SOHC 8V)	**T974B**			
2.0 4WD	12.88 - 10.92	80	1997	4	4G63 (SOHC 8V)	**T974B**			
2.0 GTI 16V	11.87 - 10.92	106	1997	4	4G63 (DOHC 16V)	**T903B**			
2.0 GTI 16V	11.88 - 10.92	107	1997	4	4G63 (DOHC 16V)	**T903B**			
2.0 GTi 16V 4WD	06.88 - 10.92	106	1997	4	4G63 (DOHC 16V)	**T903B**			
2.0 GTi 16V 4WD	09.91 - 10.92	110	1997	4	4G63 (DOHC 16V)	**T974B**			
Galant V (E5_A, E7_A, E8_A)									
1.8	02.94 - 08.96	85	1834	4	4G93	**T502B**			
1.8 GLSI	11.92 - 08.96	93	1834	4	4G93 (GDI)	**T502B**			
2.0 GLSI	11.92 - 08.96	101	1997	4	4G63 (SOHC 8V)	**T502B**			
2.0 GLSI 4WD	11.92 - 08.96	101	1997	4	4G63 (SOHC 8V)	**T502B**			
2.0 V6-24	11.92 - 08.96	110	1999	6	6A12	**T504B**			
2.5	11.92 - 09.96	125	2497	6	6G73	**T531B**			
2.5 V6-24 4WD	11.92 - 08.96	125	2497	6	6G73	**T531B**			
Galant V Sedan (E5_A, E7_A, E8_A)									
1.8	02.94 - 08.96	85	1834	4	4G93	**T502B**			
1.8 GLSI	11.92 - 08.96	93	1834	4	4G93 (GDI)	**T502B**			
2.0 GLSI	11.92 - 08.96	101	1997	4	4G63 (SOHC 8V)	**T502B**			
2.0 GLSI 4WD	11.92 - 08.96	101	1997	4	4G63 (SOHC 8V)	**T502B**			
2.0 V6-24	11.92 - 08.96	110	1999	6	6A12	**T504B**			
2.5 V6-24 4WD	11.92 - 08.96	125	2497	6	6G73	**T531B**			
Galant VI (EA_)									
2.0	09.96 - 09.00	100	1997	4	4G63 (SOHC 16V)	**T533P**			semidirect
2.0	09.00 - 10.04	98	1997	4	4G63 (SOHC 16V)	**T533P**			semidirect
2.4 GDI	02.99 - 09.00	110	2351	4	4G64 (GDI)	**T533P**			semidirect
2.4 GDI	09.00 - 10.04	106	2351	4	4G64 (GDI)	**T533P**			semidirect
2.5 V6 24V	09.96 - 09.00	120	2498	6	6A13	**T253B**			
2.5 V6 24V	09.00 - 10.04	118	2498	6	6A13	**T253B**			
Galant VI Station Wagon (EA_)									
2.0	09.96 - 09.00	100	1997	4	4G63 (SOHC 16V)	**T533P**			semidirect
2.0	09.00 - 10.03	98	1997	4	4G63 (SOHC 16V)	**T533P**			semidirect
2.4 GDI	02.99 - 09.00	110	2351	4	4G64 (GDI)	**T533P**			semidirect

MITSUBISHI Galant VI Station Wagon (EA_) ▶

model	year	kW	cm³	cyl	engine	I	II	III	info
Galant VI Station Wagon (EA_)									
2.4 GDI	09.00 - 10.03	106	2351	4	4G64 (GDI)	**T533P**			semidirect
2.5 V6 24V	09.96 - 09.00	120	2498	6	6A13	**T253B**			
2.5 V6 24V	09.00 - 10.03	118	2498	6	6A13	**T253B**			
Grandis (NA_W)									
2.4	04.04 -	121	2378	4	4G69	**T533P**			semidirect
L 200 (K3_T, K2_T, K1_T, K0_T)									
2.0	11.86 - 08.96	75	1997	4	4G63 (SOHC 8V)	**T254B**			
2.0 4WD	11.86 - 08.96	75	1997	4	4G63 (SOHC 8V)	**T254B**			
3.0 4WD	11.86 - 05.92	107	2972	6	6G72 (SOHC 12V)	**T535B**			
L 200 (K7_T, K6_T)									
2.0	06.96 - 12.07	90	1997	4	4G63 (SOHC 8V)	**T538B**			
2.4 4WD	06.96 - 12.07	97	2351	4	4G64 (SOHC 16V)	**T538B**			
L 300 Bus (LO3_P/G, L0_2P)									
1.8	03.83 - 10.86	60	1795	4	4G62	**T254B**			
1.8 4WD	08.84 - 02.87	60	1795	4	4G62	**T254B**			
2.0 4WD	11.86 - 02.87	65	1997	4	4G63 (SOHC 8V)	**T254B**			
L 300 Bus (P0_W, P1_W, P2_W)									
2.0	11.86 -	66	1997	4	4G63 (SOHC 8V)	**T254B**			
2.0 4WD	12.86 -	65	1997	4	4G63 (SOHC 8V)	**T254B**			
2.0 4WD	11.86 -	66	1997	4	4G63 (SOHC 8V)	**T254B**			
2.4	11.90 -	82	2351	4	4G64 (12V)	**T254B**			coil cable 60 cm
	11.90 -	82	2351	4	4G64 (12V)	**T974B**			coil cable 20 cm
2.4	08.88 - 08.97	82	2351	4	4G64 (8V)	**T254B**			coil cable 60 cm
	08.88 - 08.97	82	2351	4	4G64 (8V)	**T974B**			coil cable 20 cm
2.4 4WD	11.86 - 12.90	80	2351	4	G64B	**T974B**			
2.4 4WD	11.90 -	82	2351	4	4G64 (12V)	**T254B**			coil cable 60 cm
	11.90 -	82	2351	4	4G64 (12V)	**T974B**			coil cable 20 cm
2.4 GLX 4WD	11.86 - 08.97	82	2351	4	4G64 (8V)	**T254B**			coil cable 60 cm
	11.86 - 08.97	82	2351	4	4G64 (8V)	**T974B**			coil cable 20 cm
L 300 Flatbed (P1_T)									
2.0	07.94 - 04.00	85	1997	4	4G63 (DOHC 16V)	**T538B**			
L 300 Van (P0_W, P1_W)									
1.8	03.83 - 10.86	60	1795	4	4G62	**T254B**			
2.4	11.86 - 08.97	82	2351	4	4G64 (8V)/G64B	**T254B**			coil cable 60 cm
	11.86 - 08.97	82	2351	4	4G64 (8V)/G64B	**T974B**			coil cable 20 cm
2.4 4WD	11.86 - 08.97	82	2351	4	4G64 (8V)/G64B	**T254B**			coil cable 60 cm
	11.86 - 08.97	82	2351	4	4G64 (8V)/G64B	**T974B**			coil cable 20 cm
L 400 / Space Gear Bus									
2.4 i 4WD	05.95 - 05.00	97	2351	4	4G64 (SOHC 16V)	**T538B**			
Lancer Cargo I Combi (CS_W)									
1.6	09.03 - 10.08	72	1584	4	4G18	**T539P**			semidirect
2.0	09.03 - 12.07	99	1997	4	4G63 (DOHC 16V)	**T295P**			semidirect
Lancer III (C1_A, C6_A)									
1.2	08.86 - 04.88	44	1198	4	4G16	**T250B**			
1.2 GL	01.84 - 10.86	40	1198	4	4G16	**T250B**			
1.5 GLX	06.85 - 04.88	51	1468	4	G15B	**T903B**			
1.5 GLX	11.83 - 04.88	55	1468	4	4G15	**T250B**			
Lancer III Station Wagon (C1_V, C3_V)									
1.5	09.85 - 08.89	51	1468	4	G15B	**T903B**			
1.5	09.85 - 12.87	55	1468	4	4G15	**T250B**			
1.5	09.88 - 12.90	61	1468	4	4G15	**T250B**			
1.5 12V	09.90 - 12.91	66	1468	4	4G15 (12V)	**T250B**			
1.8 4WD	01.87 - 12.87	66	1755	4	4G37	**T252B**			
1.8 4WD	03.89 - 12.90	63	1755	4	4G37	**T252B**			
1.8 4WD	08.90 - 06.92	69	1755	4	4G37	**T252B**			
Lancer IV (C6_A, C7_A)									
1.3	05.88 - 06.90	44	1298	4	G13B	**T901B**			
1.3 12V	07.90 - 07.93	44	1298	4	4G13 (12V)	**T250B**			
1.3 12V	06.92 - 05.94	55	1299	4	4G13 (12V)	**T250B**			
1.5	06.88 - 05.92	62	1468	4	4G15	**T250B**			
1.5 12V	05.89 - 05.92	66	1468	4	4G15 (12V)	**T250B**			
1.6 16V	06.92 - 05.94	83	1597	4	4G92	**T502B**			
1.6 4WD	06.92 - 11.93	84	1597	4	4G92	**T502B**			
1.6 GTi	05.88 - 05.90	91	1596	4	4G61	**T252B**			
1.8 4WD	09.89 - 06.92	71	1755	4	4G37	**T903B**			
1.8 GTi 16V	11.89 - 05.92	100	1836	4	4G67	**T902B**			
1.8 GTi 16V	06.92 - 12.93	103	1834	4	4G93	**T505B**			
Lancer IV Sedan (C6_A)									
1.3	08.88 - 05.92	51	1299	4	G13B	**T901B**			
1.3	04.88 - 05.92	44	1299	4	4G13 (8V)	**T250B**			

MITSUBISHI Lancer IV Sedan (C6_A)

model	year	kW	cm³	cyl	engine	I	II	III	info
Lancer IV Sedan (C6_A)									
1.3 12V	07.90 - 06.92	55	1299	4	4G13 (12V)	**T250B**			
1.3 GL	05.88 - 06.90	50	1298	4	G13B	**T901B**			
1.5	04.88 - 05.92	62	1468	4	4G15	**T250B**			
1.5 12V	05.89 - 05.92	66	1468	4	4G15 (12V)	**T250B**			
1.6 GTi	05.88 - 05.90	91	1596	4	4G61	**T252B**			
Lancer V (CB/D_A)									
1.3	06.92 - 02.95	55	1298	4	4G13 (12V)	**T901B**			
1.3	06.92 - 12.96	55	1299	4	4G13 (12V)	**T901B**			
1.6	02.94 - 12.96	66	1597	4	4G92	**T502B**			
1.6 16V	06.92 - 12.96	83	1597	4	4G92	**T502B**			
1.6 16V 4WD	06.92 - 12.96	83	1597	4	4G92	**T502B**			
1.8 16V	06.92 - 12.93	103	1834	4	4G93	**T505B**			
Lancer V Station Wagon (CB_W, CD_W)									
1.3	11.99 - 08.03	55	1298	4	4G13 (12V)	**T901B**			
1.3 16V	09.97 - 10.99	55	1298	4	4G13 (12V)	**T901B**			
1.6 16V	12.92 - 10.03	83	1597	4	4G92	**T502B**			
1.6 16V 4WD	12.92 - 10.03	83	1597	4	4G92	**T502B**			
Lancer VI (CJ-CP_)									
1.3 12V	12.95 - 08.03	55	1299	4	4G13 (12V)	**T901B**			
1.5 16V	12.95 - 08.03	69	1468	4	4G15 (16V)	**T901B**			
1.6 16V	12.95 - 08.03	66	1597	4	4G92	**T533P**			semidirect
2.0 16V EVO	08.96 - 08.03	206	1997	4	4G63 Turbo	**T295P**			semidirect
Lancer Sedan (CS_A)									
1.3	09.03 -	60	1299	4	4G13 (16V)	**T539P**			semidirect
1.6	09.03 -	72	1584	4	4G18	**T539P**			semidirect
2.0	12.03 -	99	1997	4	4G63 (DOHC 16V)	**T533P**			semidirect
2.0 16V EVO VIII	03.04 -	195	1997	4	4G63 Turbo	**T533P**			semidirect
2.0 16V EVO IX	01.06 -	206	1997	4	4G63 Turbo	**T533P**			semidirect
Mirage CC									
1.5	04.86 - 01.88	52	1499	4	G31B	**T252B**			
1.8 GTi	12.91 - 07.03	103	1834	4	4G93	**T503B**			
Mirage Sedan									
1.8 GSi	12.91 - 08.95	103	1834	4	4G93	**T503B**			
Outlander I (CU_W)									
2.0	05.03 - 10.06	100	1997	4	4G63 (DOHC 16V)	**T295P**			semidirect
2.0 4WD	05.03 - 10.06	93	1997	4	4G63 (DOHC 16V)	**T295P**			semidirect
2.0 4WD	05.03 - 10.06	100	1997	4	4G63 (DOHC 16V)	**T295P**			semidirect
2.0 4WD	05.03 - 10.06	177	1997	4		**T295P**			semidirect
2.0 Turbo 4WD	04.04 - 10.06	148	1997	4	4G63 T (DOHC 16V)	**T295P**			semidirect
2.4 4WD	05.03 - 10.06	102	2351	4	4G64 (SOHC 16V)	**T533P**			semidirect
2.4 4WD	11.03 - 10.06	118	2378	4	4G69	**T533P**			semidirect
2.4 4WD	05.03 - 10.06	119	2378	4	4G69	**T533P**			semidirect
Pajero I (L04_G, L14_G)									
3.0 V6	11.88 - 11.90	104	2972	6	6G72 (SOHC 12V)	**T535B**			
Pajero I Canvas Top (L04_G)									
2.6	01.83 - 11.90	76	2555	4	4G54	**T254B**			
Pajero II (V3_W, V2_W, V4_W)									
2.4	04.91 - 10.99	82	2351	4	4G64 (12V)	**T252B**			
3.0 V6 4WD	12.90 - 12.95	110	2972	6	6G72 (SOHC 12V)	**T535B**			
3.0 V6 24V	06.94 - 05.97	133	2972	6	6G72 (SOHC 24V)	**T536B**			7 mm cable
	06.94 - 05.97	133	2972	6	6G72 (SOHC 24V)	**T632P**			5 mm cable
3.0 V6 24V	06.97 - 10.99	130	2972	6	6G72 (SOHC 24V)	**T536B**			7 mm cable
	06.97 - 10.99	130	2972	6	6G72 (SOHC 24V)	**T632P**			5 mm cable
3.5 V6 24V	06.94 - 05.97	153	3497	6	6G74 (DOHC 24V, SOHC 24V)	**T537P**			semidirect
	06.97 - 10.99	153	3497	6	6G74 (DOHC 24V, SOHC 24V)	**T632P**			
3.5 V6 24V	07.97 - 10.99	143	3497	6	6G74 (DOHC 24V, SOHC 24V)	**T537P**			semidirect
Pajero II Canvas Top (V2_W, V4_W)									
1.8 GDI	06.98 - 04.00	96	1834	4	4G93 (GDI)	**T533P**			semidirect
2.4	04.91 - 04.00	82	2351	4	4G64 (12V)	**T252B**			
3.0 V6	12.90 - 12.95	110	2972	6	6G72 (SOHC 12V)	**T535B**			
3.0 V6 24V	06.94 - 04.00	133	2972	6	6G72 (SOHC 24V)	**T536B**			7 mm cable
	06.94 - 04.00	133	2972	6	6G72 (SOHC 24V)	**T632P**			5 mm cable
Pajero III Canvas Top (V60, V70)									
3.5 V6 GDI	04.00 - 12.06	149	3497	6	6G74 (DOHC 24V, SOHC 24V)	**T537P**			semidirect
Pajero Pinin (H6_W, H7_W)									
1.8	11.01 - 06.07	84	1834	4	4G93	**T533P**			semidirect
1.8 GDI	10.99 - 06.07	88	1834	4	4G93 (GDI)	**T533P**			semidirect
Pajero Sport (K90)									
3.0 V6	11.98 -	130	2972	6	6G72 (SOHC 24V)	**T632P**			
3.0 V6	06.00 -	125	2972	6	6G72 (SOHC 24V)	**T632P**			

MITSUBISHI Santamo ▶

model	year	kW	cm³	cyl	engine	I	II	III	info
Santamo									
2.0 16V	05.99 - 12.02	102	1997	4	4G63 (DOHC 16V)	**T902B**			DIN
	01.03 - 12.04	102	1997	4	4G63 (DOHC 16V)	**T745B**			semidirect
2.0 16V 4WD	05.99 - 12.02	102	1997	4	4G63 (DOHC 16V)	**T902B**			DIN
	01.03 - 12.04	102	1997	4	4G63 (DOHC 16V)	**T745B**			semidirect
Sapporo II-III (A16_A)									
2.0 GSR	08.80 - 09.84	82	1995	4	4G63 (SOHC 8V)	**T252B**			
2.4	06.87 - 08.90	91	2351	4	4G64 (8V)	**T254B**			
Sigma (F2_A, F1_A)									
3.0 V6	12.90 - 07.96	130	2972	6	6G72 (SOHC 12V)	**T532B**			
3.0 V6	12.90 - 07.96	151	2972	6	6G72 (DOHC 24V)	**T532B**			
Sigma Station Wagon (F0_W)									
3.0	06.92 - 10.96	125	2972	6	6G72 (SOHC 12V)	**T532B**			
Space Runner (N1_W, N2_W)									
1.8	10.91 - 08.99	90	1834	4	4G93	**T502B**			
1.8	06.96 - 08.99	85	1834	4	4G93	**T502B**			
1.8 4WD	10.91 - 08.99	90	1834	4	4G93	**T502B**			
1.8 4WD	06.96 - 08.99	85	1834	4	4G93	**T502B**			
Space Runner (N6_W)									
2.0	08.99 - 08.02	100	1997	4	4G63 (DOHC 16V)	**T533P**			semidirect
Space Star (DG_A)									
1.3 16V	06.98 - 12.04	63	1299	4	4G13 (16V)	**T251B**			
	06.98 - 12.04	63	1299	4	4G13 (16V)	**T539P**			semidirect
Space Star (DG_A)									
1.3 16V	12.98 - 12.04	61	1299	4	4G13 (16V)	**T251B**			
	12.98 - 12.04	61	1299	4	4G13 (16V)	**T539P**			semidirect
1.3 16V	09.00 - 12.04	60	1299	4	4G13 (16V)	**T251B**			
	09.00 - 12.04	60	1299	4	4G13 (16V)	**T539P**			semidirect
1.6 16V	01.01 - 12.04	72	1584	4	4G18	**T539P**			semidirect
1.8 GDI	06.98 - 12.04	87	1834	4	4G93 (GDI)	**T533P**			semidirect
1.8 GDI	06.98 - 12.04	90	1834	4	4G93 (GDI)	**T533P**			semidirect
1.8 MPI	10.02 - 12.04	82	1834	4	4G93	**T533P**			semidirect
Space Wagon (D0_V/W)									
1.8 4WD	10.87 - 08.88	66	1755	4	4G37	**T252B**			
1.8 GLX	01.84 - 12.88	66	1755	4	4G37	**T252B**			
2.0 4WD	03.85 - 04.91	75	1997	4	4G63 (SOHC 8V)	**T538B**			
2.0 GLX	06.86 - 05.88	62	1997	4	G63B	**T538B**			
2.0 GLX 4WD	06.86 - 05.88	62	1997	4	G63B	**T538B**			
2.0 GLXi	06.88 - 04.91	74	1997	4	4G63 (SOHC 8V)	**T903B**			
2.0 GLXi 4WD	06.88 - 04.91	74	1997	4	4G63 (SOHC 8V)	**T903B**			
Space Wagon (N3_W, N4_W)									
1.8	10.91 - 10.98	90	1834	4	4G93	**T502B**			
1.8 4WD	10.91 - 10.98	90	1834	4	4G93	**T502B**			
2.0	10.92 - 10.98	98	1997	4	4G63 (DOHC 16V)	**T502B**			
	10.92 - 10.98	98	1997	4	4G63 (DOHC 16V)	**T533P**			semidirect
2.0 4WD	10.92 - 10.98	98	1997	4	4G63 (DOHC 16V)	**T502B**			
	10.92 - 10.98	98	1997	4	4G63 (DOHC 16V)	**T533P**			semidirect
Space Wagon (N9_W, N8_W)									
2.0 GDI	04.02 - 12.04	98	1997	4	4G63 (DOHC 16V)	**T533P**			semidirect
2.4 GDI	10.98 - 12.04	110	2351	4	4G64 (GDI)	**T533P**			semidirect
2.4 GDI	09.00 - 12.04	108	2351	4	4G64 (GDI)	**T533P**			semidirect
2.4 GDI 4WD	10.98 - 12.04	110	2351	4	4G64 (GDI)	**T533P**			semidirect
2.4 GDI 4WD	09.00 - 12.04	108	2351	4	4G64 (GDI)	**T533P**			semidirect
Tredia (A21_)									
1.8 GLS	08.84 - 07.86	66	1755	4	4G37	**T255B**			
1.8 Turbo	08.84 - 07.86	100	1796	4	G62B	**T252B**			
NISSAN									
100 NX (B13)									
1.6	03.90 - 06.92	66	1597	4	GA16DS	**T849B**			
1.6 SR	09.93 - 10.94	75	1597	4	GA16DE	**T849B**			
2.0	10.90 - 10.94	110	1998	4	SR20DE	**T999B**			
2.0 GTI	03.91 - 10.94	105	1998	4	SR20DE	**T999B**			
200 SX (S14)									
2.0 i 16V Turbo	10.93 - 12.99	147	1998	4	SR20DET	**T999B**			
Almera I (N15)									
1.4	09.95 - 07.00	64	1392	4	GA14DE	**T848B**			
1.6	09.95 - 07.00	73	1597	4	GA16DE	**T848B**			
1.4 GX,LX	09.95 - 07.00	55	1392	4	GA14DE	**T848B**			
1.6 SLX	09.95 - 07.00	66	1597	4	GA16DE	**T848B**			

NISSAN Almera I Hatchback (N15) ▶

model	year	kW	cm³	cyl	engine	I	II	III	info
Almera I Hatchback (N15)									
1.4	09.95 - 03.00	64	1392	4	GA14DE	**T848B**			
1.6	09.95 - 03.00	73	1597	4	GA16DE	**T848B**			
1.4 S,GX,LX	09.95 - 03.00	55	1392	4	GA14DE	**T848B**			
1.6 SR,SLX	09.95 - 03.00	66	1597	4	GA16DE	**T848B**			
2.0 GTi	07.96 - 03.00	105	1998	4	SR20DE	**T506B**			
Almera Tino (V10)									
2.0	08.00 -	100	1998	4	SR20DE	**T506B**			
Bluebird (T72 , T12)									
1.6	03.86 - 06.90	61	1598	4	CA16S	**T488B**			
1.6	12.85 - 02.90	66	1598	4	CA16S	**T488B**			
1.8	11.86 - 04.90	66	1809	4	CA18S	**T488B**			
1.8 Turbo	12.85 - 05.90	99	1809	4	CA18T	**T488B**			
2.0	12.85 - 12.87	75	1974	4	CA20S	**T488B**			
2.0 i	12.85 - 12.90	77	1974	4	CA20E	**T488B**			
2.0 i	09.88 - 09.90	85	1974	4	CA20E	**T488B**			
Bluebird (U11)									
1.6	12.85 - 02.90	66	1598	4	CA16S	**T488B**			
1.8	11.83 - 06.88	66	1809	4	CA18S	**T488B**			
1.8 Turbo	04.84 - 05.90	99	1809	4	CA18T	**T488B**			
2.0 i	04.84 - 01.88	77	1974	4	CA20E	**T488B**			
Bluebird Hatchback (T72, T12)									
1.6	03.86 - 06.90	61	1598	4	CA16S	**T488B**			
1.8 Turbo	12.85 - 05.90	99	1809	4	CA18T	**T488B**			
2.0	12.85 - 12.87	75	1974	4	CA20S	**T488B**			
2.0 i	12.85 - 12.90	77	1974	4	CA20E	**T488B**			
2.0 i	09.88 - 09.90	85	1974	4	CA20E	**T488B**			
Bluebird Station Wagon (WU11)									
1.6	12.85 - 02.90	66	1598	4	CA16S	**T488B**			
1.8	11.83 - 04.90	66	1809	4	CA18S	**T488B**			
1.8 Turbo	09.84 - 04.90	99	1809	4	CA18ET	**T488B**			
2.0	04.86 - 09.90	75	1974	4	CA20S	**T488B**			
2.0 i	04.84 - 12.90	77	1974	4	CA20E	**T488B**			
Cherry II (N10)									
1.5	08.81 - 05.82	51	1488	4	E15	**T489B**			
Cherry III (N12)									
1.3	05.82 - 10.86	44	1269	4	E13	**T489B**			
1.5	11.83 - 10.86	55	1488	4	E15S	**T489B**			
1.5 ET Turbo	01.83 - 12.85	77	1488	4	E15ET	**T489B**			
Kubistar (X76)									
1.2	08.03 -	44	1149	4	D7F 764	**T319B**			
1.2 16V	04.06 -	55	1149	4	D4F 712	**T495B**			
Kubistar Van									
1.2	08.03 -	44	1149	4	D7F 764	**T319B**			
1.2 16V	04.06 -	55	1149	4	D4F 712	**T495B**			
Maxima II (J30)									
3.0 i	10.88 - 06.94	125	2960	6	VG30E	**T265B**			
Micra I (K10)									
1.0	12.82 - 05.89	40	988	4	MA10S	**T260B**			
1.0	12.82 - 12.89	37	988	4	MA10S	**T260B**			
1.2	07.86 - 07.92	44	1235	4	MA12S	**T260B**			
1.2	07.86 - 07.92	40	1235	4	MA12S	**T260B**			
Micra II (K11)									
1.0 i 16V	08.92 - 09.00	40	998	4	CG10DE	**T385B**			
1.3 i 16V	08.92 - 09.00	55	1275	4	CG13DE	**T385B**			
1.4 i 16V	09.00 - 02.03	60	1348	4	CGA3DE	**T385B**			
Pathfinder									
3.0 Allrad	07.86 - 08.89	95	2960	6	VG30I	**T121B**			
Patrol GR I (Y60, GR)									
4.2 cat	11.88 - 06.97	121	4169	6	TB42E	**T574B**			
Patrol (K260, W260)									
3.0	03.89 - 10.93	109	2962	6		**T948B**			
3.0 4x4	03.89 - 10.93	109	2962	6		**T948B**			
Pick Up (D21)									
2.4 i 12V	10.95 - 02.98	91	2389	4	KA24E	**T575B**			
2.4 i 12V 4WD	10.95 - 02.98	93	2389	4	KA24E	**T575B**			
3.0 i V6 4WD	09.90 - 02.98	109	2960	6	VG30E	**T264B**			
Pick Up (D22)									
2.4 i	02.98 -	88	2389	4	KA24E	**T575B**			
2.4 i 4WD	02.98 -	88	2389	4	KA24E	**T575B**			

NISSAN Prairie (M10) ▶

model	year	kW	cm³	cyl	engine	I	II	III	info
Prairie (M10)									
1.5 S	01.84 - 12.87	55	1488	4	E15S	**T261B**			
1.8 SGL	07.83 - 12.85	65	1809	4	CA18S	**T261B**			
1.8 SGL	05.85 - 10.87	66	1809	4	CA18S	**T261B**			
Prairie Pro (M11)									
2.0 i	10.88 - 04.92	72	1974	4	CA20E	**T557B**			
2.0 i 4x4	10.88 - 12.92	72	1974	4	CA20E	**T557B**			
2.4 i	04.92 - 07.94	98	2389	4	KA24E	**T530B**			
2.4 i 4x4	04.92 - 07.94	98	2389	4	KA24E	**T530B**			
Primera (P10)									
1.6	06.90 - 01.96	66	1597	4	GA16DS	**T849B**			
1.6	06.93 - 01.96	75	1597	4	GA16DE	**T848B**			
2.0	06.90 - 04.93	105	1998	4	SR20DE	**T999B**			
2.0 16V	06.90 - 01.96	85	1998	4	SR20DI	**T999B**			
2.0 16V 4x4	04.91 - 06.96	85	1998	4	SR20DI	**T999B**			
2.0 GT	06.90 - 01.96	110	1998	4	SR20DE	**T999B**			
2.0 GT 4x4	03.91 - 04.93	105	1998	4	SR20DE	**T999B**			
2.0 i	01.95 - 06.96	92	1998	4	SR20DE	**T999B**			
Primera (P11)									
1.6 16V	09.96 - 12.01	66	1597	4	GA16DE	**T848B**			
1.6 16V	09.96 - 10.00	73	1597	4	GA16DE	**T848B**			
1.6 16V	06.96 - 09.00	78	1597	4	QG16DE	**T848B**			
2.0 16V	09.96 - 12.01	96	1998	4	SR20DE	**T506B**			
2.0 16V	09.96 - 12.01	85	1998	4	SR20De	**T506B**			
2.0 16V	09.96 - 12.01	110	1998	4	SR20DE	**T506B**			
2.0 16V	08.99 - 12.01	103	1998	4	SR20DE	**T506B**			
Primera Hatchback (P10)									
1.6	06.90 - 01.96	66	1597	4	GA16DS	**T849B**			
1.6	06.90 - 06.93	71	1597	4	GA16DS	**T849B**			
1.6	06.93 - 01.96	75	1597	4	GA16DE	**T848B**			
2.0	06.90 - 01.96	110	1998	4	SR20DE	**T999B**			
2.0	06.90 - 04.93	105	1998	4	SR20DE	**T999B**			
2.0 16V	06.90 - 01.96	85	1998	4	SR20DI	**T999B**			
2.0 16V 4x4	04.91 - 06.96	85	1998	4	SR20DI	**T999B**			
2.0 GT 4x4	03.91 - 04.93	105	1998	4	SR20DE	**T999B**			
2.0 i	01.95 - 06.96	92	1998	4	SR20DE	**T999B**			
Primera Hatchback (P11)									
1.6 16V	09.96 - 07.02	66	1597	4	GA16DE	**T848B**			
1.6 16V	09.96 - 07.02	73	1597	4	GA16DE	**T848B**			
1.6 16V	09.00 - 07.02	78	1597	4	QG16DE	**T848B**			
2.0 16V	09.96 - 07.02	96	1998	4	SR20DE	**T506B**			
2.0 16V	09.96 - 07.02	85	1998	4	SR20De	**T506B**			
2.0 16V	09.96 - 07.02	110	1998	4	SR20DE	**T506B**			
2.0 16V	08.99 - 07.02	103	1998	4	SR20DE	**T506B**			
Primera Traveller (W10)									
1.6 i	07.90 - 03.98	66	1597	4	GA16DS	**T849B**			
1.6 i	03.94 - 03.98	75	1597	4	GA16DE	**T848B**			
2.0	07.94 - 01.98	110	1998	4	SR20DE	**T999B**			
2.0 i	07.90 - 03.98	85	1998	4	SR20DI	**T999B**			
Primera Traveller (WP11)									
1.6 16V	04.98 - 12.01	66	1597	4	GA16DE	**T848B**			
1.6 16V	04.98 - 12.01	73	1597	4	GA16DE	**T848B**			
2.0 16V	06.96 - 12.01	85	1998	4	SR20De	**T506B**			
2.0 16V	04.98 - 12.01	96	1998	4	SR20DE	**T506B**			
2.0 16V	08.99 - 12.01	103	1998	4	SR20DE	**T506B**			
Serena (C23M)									
1.6 16V	02.93 - 09.01	71	1597	4	GA16DE	**T351B**			
2.0 16V	11.92 - 09.01	93	1998	4	SR20DE	**T352B**			
Serena (C24)									
2.0 SGX	09.00 09.05	107	1998	4	SR20DE	**T352B**			
2.0 SGX 4x4	09.00 09.05	107	1998	4	SR20DE	**T352B**			
Silvia (S110)									
1.8	01.79 - 05.83	68	1770	4	L18E	**T262B**			
2.0 GP	04.84 - 09.88	107	1991	4	FJ20E	**T261B**			
Sunny I (B11)									
1.3	03.82 - 08.90	44	1269	4	E13	**T489B**			
1.5	03.82 - 08.90	55	1488	4	E15S	**T266B**			
Sunny II (N13)									
1.3	07.86 - 10.91	44	1269	4	E13S	**T489B**			
1.4 LX	10.88 - 08.91	55	1392	4	GA14S	**T491B**			
1.5	06.86 - 10.88	52	1487	4	E15S	**T266B**			

NISSAN Sunny II (N13) ▶

model	year	kW	cm³	cyl	engine	I	II	III	info
Sunny II (N13)									
1.6	06.86 - 10.88	62	1597	4	E16S	**T266B**			
1.6 GTI 16V	02.87 - 10.88	81	1598	4	CA16D	**T386B**			
1.6 i	06.86 - 10.90	54	1597	4	E16i	**T489B**			
1.6 i 12V	10.88 - 06.91	66	1597	4	GA16i	**T386B**			
1.6 i 4x4	06.86 - 10.90	54	1597	4	E16i	**T489B**			
Sunny II Coupe (B12)									
1.5	06.86 - 10.88	52	1487	4	E15S	**T266B**			
1.6	06.86 - 10.88	62	1597	4	E16S	**T266B**			
1.6 i	06.86 - 05.89	54	1597	4	E16i	**T489B**			
1.6 i 12V	10.88 - 06.91	66	1597	4	GA16i	**T386B**			
Sunny II Hatchback (N13)									
1.3	06.86 - 10.88	44	1269	4	E13S	**T489B**			
1.4 LX	01.89 - 08.91	55	1392	4	GA14S	**T491B**			
1.5	06.86 - 10.88	52	1487	4	E15S	**T266B**			
1.6	06.86 - 10.88	62	1597	4	E16S	**T266B**			
1.6 GTI 16V	06.87 - 05.89	81	1598	4	CA16D	**T386B**			
1.6 i	06.86 - 10.90	54	1597	4	E16i	**T489B**			
1.6 i 12V	06.86 - 10.90	66	1597	4	GA16i	**T386B**			
Sunny II Traveller (B12)									
1.5	06.86 - 10.88	52	1487	4	E15S	**T266B**			
1.6	06.86 - 10.88	62	1597	4	E16S	**T266B**			
1.6 i	08.86 - 05.89	54	1598	4	E16i	**T489B**			
1.6 i 12V	10.88 - 06.91	66	1597	4	GA16i	**T386B**			
1.6 i 4x4	06.86 - 05.89	54	1598	4	E16i	**T489B**			
Sunny III (N14)									
1.4 i	10.90 - 05.95	55	1392	4	GA14DE	**T848B**			without distributor
	10.90 - 05.95	55	1392	4	GA14DS	**T849B**			with distributor
1.4 i 16V	10.90 - 06.95	64	1392	4	GA14DE	**T848B**			
1.6 i	10.90 - 05.95	66	1597	4	GA16DS	**T849B**			
1.6 i 16V	10.92 - 05.95	75	1597	4	GA16DE	**T848B**			
1.6 i 16V 4WD	10.90 - 05.95	66	1597	4	GA16DS	**T849B**			
Sunny III Hatchback (N14)									
1.4	10.90 - 06.95	60	1392	4	GA14DS	**T849B**			
1.4 i	10.90 - 05.95	55	1392	4	GA14DE	**T848B**			without distributor
	10.90 - 05.95	55	1392	4	GA14DS	**T849B**			with distributor
1.4 i 16V	10.90 - 05.95	64	1392	4	GA14DE	**T848B**			
1.6 i	10.90 - 05.95	66	1597	4	GA16DS	**T849B**			
2.0 GTI 16V	10.90 - 05.95	105	1998	4	SR20DE	**T999B**			
2.0 GTI-R 4x4	10.90 - 05.95	162	1998	4	SR20DET	**T999B**			
Sunny III Liftback (N14)									
1.4 i	10.90 - 05.95	55	1392	4	GA14DE	**T848B**			without distributor
	10.90 - 05.95	55	1392	4	GA14DS	**T849B**			with distributor
1.4 i 16V	10.90 - 06.95	64	1392	4	GA14DE	**T848B**			
1.6 i	10.90 - 05.95	66	1597	4	GA16DS	**T849B**			
2.0 i 16V	10.90 - 05.95	105	1998	4	SR20DE	**T999B**			
Sunny III Traveller (Y10)									
1.6 16V 4x4	11.90 - 05.95	66	1597	4	GA16DS	**T849B**			
1.6 i	06.91 - 03.00	66	1597	4	GA16DS	**T849B**			
1.6 i 16V 4x4	10.92 - 03.00	75	1597	4	GA16DE	**T848B**			
Sunny Van (Y10)									
1.6 i 16V	10.92 - 03.00	66	1597	4	GA16DE	**T848B**			
Terrano I (WD21)									
2.4 i 4WD	10.87 - 02.93	76	2389	4	Z24i	**T946B**			
3.0 i 4WD	01.90 - 12.95	109	2960	6	VG30E	**T264B**			
Terrano II (R20)									
2.4 4WD	05.96 - 01.02	85	2389	4	KA24E	**T575B**			
2.4 4WD	05.96 -	87	2389	4	KA24E	**T575B**			
2.4 i 12V 4WD	02.93 - 06.96	91	2389	4	KA24E	**T946B**			
Vanette Bus (C22)									
1.5	10.86 - 12.95	51	1488	4	A15S	**T492B**			
1.5	01.83 - 12.87	51	1488	4	A15	**T492B**			
1.5	10.86 - 12.95	51	1488	4	A15S	**T492B**			
Vanette Cargo Bus (HC23)									
1.6i	01.96 -	72	1597	4	GA16DE	**T351B**			
Vanette Cargo Van (HC23)									
1.6i	01.95 -	71	1597	4	GA16DE	**T351B**			

model	year	kW	cm³	cyl	engine	I	II	III	info
OPEL (VAUXHALL)									
Antara									
2.4	09.08 -	103	2405	4	Z 24 XE	**T777C**	**T986B**		original / alternative
2.4	05.06 -	104	2405	4	Z 24 XED	**T777C**	**T986B**		original / alternative
Ascona C (81_, 86_, 87_, 88_)									
1.6	09.86 - 08.88	60	1598	4	16 SV	**T162B**			
1.6 i cat	09.86 - 08.88	55	1598	4	C 16 NZ/C 16 LZ	**T267B**			
1.8	09.87 - 08.88	62	1796	4	E 18 NV	**T268B**			
1.8 E	01.85 - 08.86	74	1796	4	S 18 NV	**T268B**			
	01.85 - 08.86	74	1796	4	C 18 NE	**T764B**			
1.8 i	09.82 - 08.86	85	1796	4	18 E	**T764B**			
2.0 i	09.86 - 08.88	85	1998	4	20 NE	**T268B**			
2.0 i cat	09.86 - 08.88	85	1998	4	C 20 NE	**T268B**			
Ascona C CC (84_, 89_)									
1.6	09.86 - 08.88	60	1598	4	16 SV	**T162B**			
1.6 i cat	09.86 - 08.88	55	1598	4	C 16 NZ/C 16 LZ	**T267B**			
1.8	09.87 - 08.88	62	1796	4	E 18 NV	**T268B**			
1.8 E	01.85 - 08.86	74	1796	4	S 18 NV	**T268B**			
	01.85 - 08.86	74	1796	4	C 18 NE	**T764B**			
1.8 i	09.82 - 08.86	85	1796	4	18 E	**T764B**			
2.0 i	09.86 - 08.88	85	1998	4	20 NE	**T268B**			
2.0 i cat	09.86 - 08.88	85	1998	4	C 20 NE	**T268B**			
Astra F (56_, 57_)									
1.4	09.91 - 09.93	55	1389	4	14 NV	**T269B**			system Lucas
	09.91 - 09.93	55	1389	4	14 NV	**T765B**			system Bosch
	09.91 - 09.93	55	1389	4	14 NV	**T962B**			Mot. No. 02BF1477-
1.4	05.93 - 09.98	60	1389	4	14 SE	**T765B**			Mot. No. M19585416-02T14052
	11.94 - 09.98	60	1389	4	14 SE	**T766B**			Mot. No. 02T14053-02V57974
	11.94 - 09.98	60	1389	4	14 SE	**T996B**			Mot. No. 02V57975-02BD0921
	11.94 - 09.98	60	1389	4	14 SE	**T629B**			Mot. No. 02BD0922-
1.4 i	09.91 - 09.98	44	1389	4	C 14 NZ/X 14 NZ	**T765B**			
	11.94 - 09.98	44	1389	4	C 14 NZ/X 14 NZ	**T269B**			
	11.94 - 09.98	44	1389	4	C 14 NZ/X 14 NZ	**T962B**			Mot. No. -02BF1476,-19241623
1.4 i 16V	02.96 - 09.98	66	1389	4	X 14 XE	**T928C**	**T991B**		original / alternative
1.4 Si	11.94 - 09.98	60	1389	4	C 14 SE	**T629B**			Mot. No. 02BD0922-
	05.93 - 09.98	60	1389	4	C 14 SE	**T765B**			Mot. No. -02T14052
	11.94 - 09.98	60	1389	4	C 14 SE	**T766B**			Mot. No. -02V57974
	11.94 - 09.98	60	1389	4	C 14 SE	**T996B**			Mot. No. 02V57975-02BD0921
1.6	09.95 - 09.98	55	1598	4	16 NZR/16 LZ2	**T558B**			
1.6 i	05.93 - 07.96	52	1598	4	X 16 SZ	**T629B**			Mot. No. 02BE6167-
	05.93 - 07.96	52	1598	4	X 16 SZ	**T996B**			Mot. No. -02BE6166
1.6 i	03.92 - 09.98	55	1598	4	C 16 NZ	**T162B**			SAE,Mot. No. -02V65825
	03.92 - 09.98	55	1598	4	C 16 NZ	**T277B**			SAE,Mot. No. 02BE6167-
	03.92 - 09.98	55	1598	4	X 16 SZR	**T996B**			PIN
1.6 i 16V	08.94 - 09.98	74	1598	4	X 16 XEL	**T928C**	**T991B**		original / alternative
1.6 Si	05.92 - 12.94	74	1598	4	C 16 SE	**T766B**			Mot. No. -02V65825
	05.92 - 12.94	74	1598	4	C 16 SE	**T996B**			Mot. No. 02V65826-
1.8 i	03.92 - 09.98	66	1796	4	C 18 NZ	**T274B**			
1.8 i 16V	06.93 - 10.94	92	1799	4	C 18 XE	**T777C**	**T986B**		original / alternative
1.8 i 16V	11.94 - 09.98	85	1799	4	C 18 XEL/X 18 XE	**T777C**	**T986B**		original / alternative
1.8 i 16V	09.95 - 08.97	85	1799	4	C 18 SEL	**T777C**	**T986B**		original / alternative
2.0 i	03.92 - 09.98	85	1998	4	C 20 NE	**T274B**			
	03.92 - 09.98	85	1998	4	C 20 NE	**T558B**			ch. No. S25,S50,S60,S80-
2.0 i 16V	02.95 - 09.98	100	1998	4	X 20 XEV	**T777C**	**T986B**		original / alternative
Astra F Cabriolet (53_B)									
1.4 i 16V	01.96 - 03.01	66	1389	4	X 14 XE	**T928C**	**T991B**		original / alternative
1.4 Si	05.93 - 03.01	60	1389	4	C 14 SE	**T765B**			Mot. No. M19585416-02T14052
	11.94 - 03.01	60	1389	4	C 14 SE	**T766B**			Mot. No. 02T14053-02V57974
	11.94 - 03.01	60	1389	4	C 14 SE	**T996B**			Mot. No. 02V57975-02BD0921
	11.94 - 03.01	60	1389	4	C 14 SE	**T629B**			Mot. No. 02BD0922-
1.6 i	03.93 - 08.96	52	1598	4	X 16 SZ	**T629B**			Mot. No. 02BE6167-
	03.93 - 08.96	52	1598	4	X 16 SZ	**T996B**			Mot. No. -02BE6166
1.6 i	01.96 - 03.01	55	1598	4	X 16 SZR	**T629B**			Mot. No. 02BE6167-
	01.96 - 03.01	55	1598	4	X 16 SZR	**T996B**			Mot. No. -02BE6166
1.8 i 16V	11.94 - 03.01	85	1799	4	C 18 XEL/X 18 XE	**T777C**	**T986B**		original / alternative
2.0 i	03.93 - 10.94	85	1998	4	C 20 NE	**T274B**			
	03.93 - 10.94	85	1998	4	C 20 NE	**T558B**			ch. No. S25,S50,S60,S80-
Astra F Caravan (51_, 52_)									
1.4	09.91 - 09.93	55	1389	4	14 NV	**T269B**			system Lucas
	09.91 - 09.93	55	1389	4	14 NV	**T765B**			system Bosch
	09.91 - 09.93	55	1389	4	14 NV	**T962B**			Mot. No. 02BF1477-

OPEL Astra F Caravan (51_, 52_) ▶

model	year	kW	cm³	cyl	engine	I	II	III	info
Astra F Caravan (51_, 52_)									
1.4	05.93 - 09.98	60	1389	4	14 SE	**T765B**			Mot. No. M19585416-02T14052
	11.94 - 09.98	60	1389	4	14 SE	**T766B**			Mot. No. 02T14053-02V57974
	11.94 - 09.98	60	1389	4	14 SE	**T996B**			Mot. No. 02V57975-02BD0921
	11.94 - 09.98	60	1389	4	14 SE	**T629B**			Mot. No. 02BD0922-
1.4 i	09.91 - 01.98	44	1389	4	C 14 NZ	**T269B**			system Lucas
	09.91 - 01.98	44	1389	4	C 14 NZ	**T765B**			system Bosch
	09.91 - 01.98	44	1389	4	C 14 NZ	**T962B**			Mot. No. -02BF1476,-19241623
1.4 i 16V	02.96 - 01.98	66	1389	4	X 14 XE	**T928C**	**T991B**		original / alternative
1.4 Si	05.93 - 01.98	60	1389	4	C 14 SE	**T765B**			Mot. No. M19585416-02T14052
	11.94 - 01.98	60	1389	4	C 14 SE	**T766B**			Mot. No. 02T14053-02V57974
	11.94 - 01.98	60	1389	4	C 14 SE	**T996B**			Mot. No. 02V57975-02BD0921
	11.94 - 01.98	60	1389	4	C 14 SE	**T629B**			Mot. No. 02BD0922-
1.6	09.95 - 01.98	55	1598	4	16 LZ2	**T558B**			
	09.95 - 01.98	55	1598	4	16 NZR	**T629B**			
1.6 i	05.93 - 07.96	52	1598	4	X 16 SZ	**T629B**			Mot. No. 02BE6167-
	05.93 - 07.96	52	1598	4	X 16 SZ	**T996B**			Mot. No. -02BE6166
1.6 i	09.91 - 01.98	55	1598	4	C 16 NZ	**T162B**			SAE, Mot. No. -02V65825
	09.91 - 01.98	55	1598	4	C 16 NZ/X 16 SZR	**T277B**			SAE, Mot. No. 02BE6167-
	09.91 - 01.98	55	1598	4	X 16 SZR	**T629B**			PIN, Mot. No. 02BE6167-
	09.91 - 01.98	55	1598	4	X 16 SZR	**T996B**			PIN, Mot. No. -02BE6166
1.6 i 16V	08.94 - 01.98	74	1598	4	X 16 XEL	**T928C**	**T991B**		original / alternative
1.6 Si	03.92 - 12.94	74	1598	4	C 16 SE	**T766B**			Mot. No. -02V65825
	03.92 - 12.94	74	1598	4	C 16 SE	**T996B**			Mot. No. 02V65826-
1.8 i	09.91 - 01.98	66	1796	4	C 18 NZ	**T274B**			
1.8 i 16V	06.93 - 01.98	92	1799	4	C 18 XE	**T777C**	**T986B**		original / alternative
1.8 i 16V	07.94 - 01.98	85	1799	4	C 18 XEL/X 18 XE	**T777C**	**T986B**		original / alternative
2.0 i	09.91 - 07.94	85	1998	4	C 20 NE	**T274B**			boot design
	09.91 - 07.94	85	1998	4	C 20 NE	**T558B**			boot design
2.0 i 16V	03.93 - 01.98	110	1998	4	C 20 XE	**T881C**	**T011B**		original / alternative
	03.93 - 01.98	110	1998	4	C 20 XE	**T928C**	**T991B**		original / alternative
2.0 i 16V	02.95 - 01.98	100	1998	4	X 20 XEV	**T777C**	**T986B**		original / alternative
Astra F CC (53_, 54_, 58_, 59_)									
1.4	09.91 - 09.93	55	1389	4	14 NV	**T269B**			system Lucas
	09.91 - 09.93	55	1389	4	14 NV	**T765B**			system Bosch
	09.91 - 09.93	55	1389	4	14 NV	**T962B**			Mot. No. 02BF1477-
1.4	09.92 - 01.98	60	1389	4	14 SE	**T962B**			Mot. No. 02V57974-02B01413
	05.93 - 01.98	60	1389	4	14 SE	**T765B**			Mot. No. M19585416-02T14052
	11.94 - 01.98	60	1389	4	14 SE	**T766B**			Mot. No. 02T14053-02V57974
	11.94 - 01.98	60	1389	4	14 SE	**T996B**			Mot. No. 02V57975-02BD0921
	11.94 - 01.98	60	1389	4	14 SE	**T629B**			Mot. No. 02BD0922-
1.4 i	03.92 - 01.98	44	1389	4	C 14 NZ	**T765B**			
	11.94 - 01.98	44	1389	4	C 14 NZ	**T269B**			
	11.94 - 01.98	44	1389	4	C 14 NZ	**T962B**			Mot. No. -02BF1476,-19241623
1.4 i 16V	01.96 - 01.98	66	1389	4	X 14 XE	**T928C**	**T991B**		original / alternative
1.4 Si	05.93 - 01.98	60	1389	4	C 14 SE	**T765B**			Mot. No. M19585416-02T14052
	11.94 - 01.98	60	1389	4	C 14 SE	**T766B**			Mot. No. 02T14053-02V57974
	11.94 - 01.98	60	1389	4	C 14 SE	**T996B**			Mot. No. 02V57975-02BD0921
	11.94 - 01.98	60	1389	4	C 14 SE	**T629B**			Mot. No. 02BD0922-
1.6	09.95 - 01.98	55	1598	4	16 NZR/16 LZ2	**T558B**			
1.6 i	05.93 - 07.96	52	1598	4	X 16 SZ	**T629B**			Mot. No. 02BE6167-
	05.93 - 07.96	52	1598	4	X 16 SZ	**T996B**			Mot. No. -02BE6166
1.6 i	09.91 - 01.98	55	1598	4	C 16 NZ	**T162B**			SAE, Mot. No. -02V65825
	09.91 - 01.98	55	1598	4	C 16 NZ/X 16 SZR	**T277B**			SAE, Mot. No. 02BE6167-
	09.91 - 01.98	55	1598	4	X 16 SZR	**T629B**			PIN, Mot. No. 02BE6167-
	09.91 - 01.98	55	1598	4	X 16 SZR	**T996B**			PIN, Mot. No. -02BE6166
1.6 i 16V	08.94 - 01.98	74	1598	4	X 16 XEL	**T289C**	**T096B**		orig. / alter.-Mot. No. -20C17332
	08.94 - 01.98	74	1598	4	X 16 XEL	**T928C**	**T991B**		orig. / alter.-Mot. No. 20C17333-
1.6 Si	03.92 - 12.94	74	1598	4	C 16 SE	**T766B**			Mot. No. -02V65825
	03.92 - 12.94	74	1598	4	C 16 SE	**T996B**			Mot. No. 02V65826-
1.8 i	09.91 - 01.98	66	1796	4	C 18 NZ	**T274B**			
1.8 i 16V	09.94 - 01.98	85	1799	4	C 18 XEL/X 18 XE	**T777C**	**T986B**		original / alternative
1.8 i 16V	06.93 - 08.94	92	1799	4	C 18 XE	**T777C**	**T986B**		original / alternative
2.0 GSI 16V	09.91 - 01.98	110	1998	4	C 20 XE	**T881C**	**T011B**		orig. / alter.-with distrib.
	09.91 - 01.98	110	1998	4	C 20 XE	**T928C**	**T991B**		original / alternative
2.0 i	09.91 - 01.98	85	1998	4	C 20 NE	**T274B**			
	09.91 - 01.98	85	1998	4	C 20 NE	**T558B**			ch. No. S25,S50,S60,S80-
2.0 i 16V	02.95 - 01.98	100	1998	4	X 20 XEV	**T777C**	**T986B**		original / alternative
Astra F Classic Caravan									
1.4 i	01.98 - 01.05	44	1389	4	X 14 NZ	**T765B**			
1.6 i	01.98 - 01.05	55	1598	4	X 16 SZR	**T629B**			

OPEL Astra F Classic Caravan ▶

model	year	kW	cm³	cyl	engine	I	II	III	info
Astra F Classic Caravan									
1.6 i 16V	01.98 - 01.05	74	1598	4	X 16 XEL	**T289C**	**T096B**		original / alternative
Astra F Classic CC									
1.4 i	01.98 - 08.02	44	1389	4	X 14 NZ	**T765B**			
1.4 i	03.98 - 08.00	66	1389	4	X 14 XE	**T778C**	**T987B**		original / alternative
1.6 i	01.98 - 08.02	55	1598	4	X 16 SZR	**T629B**			
1.6 i 16V	01.98 - 08.02	74	1598	4	X 16 XEL	**T289C**	**T096B**		original / alternative
2.0 i	03.98 - 08.00	100	1998	4	X 20 XEV	**T777C**	**T986B**		original / alternative
2.0 i	10.99 - 08.00	118	1998	4	X 20 XER	**T777C**	**T986B**		original / alternative
Astra F Classic Sedan									
1.4 i	01.98 - 08.02	44	1389	4	X 14 NZ	**T765B**			
1.6 i	01.98 - 08.02	55	1598	4	X 16 SZR	**T629B**			
1.6 i 16V	01.98 - 08.02	74	1598	4	X 16 XEL	**T289C**	**T096B**		original / alternative
Astra F Van (55_)									
1.4 i	10.91 - 01.99	44	1389	4	C 14 NZ	**T269B**			Mot. No. -02V57973
	10.91 - 01.99	44	1389	4	C 14 NZ	**T962B**			Mot. No. -19241624
1.6 i	10.91 - 04.93	55	1598	4	C 16 NZ	**T277B**			
1.6 i	02.93 - 07.96	52	1598	4	X 16 SZ	**T629B**			Mot. No. 02BE61167-
	02.93 - 07.96	52	1598	4	X 16 SZ	**T996B**			Mot. No. -02BE6166
Astra G Caravan (F35_)									
1.4 16V	06.98 - 07.04	66	1389	4	X 14 XE/Z 14 XE	**T928C**	**T991B**		original / alternative
1.6	02.98 - 09.00	55	1598	4	X 16 SZR	**T282B**			
1.6	09.00 - 07.04	62	1598	4	Z 16 SE	**T282B**			
2.0 16V	02.98 - 07.04	100	1998	4	X 20 XEV	**T777C**	**T986B**		original / alternative
Astra G CC (F48_, F08_)									
1.4 16V	02.98 - 01.05	66	1389	4	X 14 XE/Z 14 XE	**T928C**	**T991B**		original / alternative
1.6	02.98 - 09.00	55	1598	4	X 16 SZR	**T282B**			
1.6	09.00 - 01.05	62	1598	4	Z 16 SE	**T282B**			
2.0 16V	02.98 - 01.05	100	1998	4	X 20 XEV/C 20 SEL	**T777C**	**T986B**		original / alternative
2.0 16V OPC	11.99 - 09.02	118	1998	4	X 20 XER	**T777C**	**T986B**		original / alternative
Astra G Sedan (F69_)									
1.4 16V	09.98 - 01.05	66	1389	4	X 14 XE/Z 14 XE	**T928C**	**T991B**		original / alternative
1.6	09.98 - 09.00	55	1598	4	X 16 SZR	**T282B**			
1.6	09.00 - 01.05	62	1598	4	Z 16 SE	**T282B**			
2.0 16V	09.98 - 01.05	100	1998	4	X 20 XEV	**T777C**	**T986B**		original / alternative
Astra G Van (F70)									
1.6	01.99 - 09.00	55	1598	4	X 16 SZR	**T282B**			
1.6	09.00 - 04.05	62	1598	4	Z 16 SE	**T282B**			
Calibra A (85_)									
2.0 i	06.90 - 07.97	85	1998	4	C 20 NE	**T271B**			Mot. No. -14180385
	06.90 - 07.97	85	1998	4	C 20 NE	**T870B**			ch. No. S1,S9-
	06.90 - 07.97	85	1998	4	C 20 NE	**T929B**			
2.0 i 4x4	06.90 - 07.97	85	1998	4	C 20 NE	**T271B**			Mot. No. -14180385
	06.90 - 07.97	85	1998	4	C 20 NE	**T870B**			ch. No. S1,S9-
	06.90 - 07.97	85	1998	4	C 20 NE	**T929B**			
2.0 i 16V	06.90 - 02.94	110	1998	4	C 20 XE	**T777C**	**T986B**		original / alternative
	06.90 - 02.94	110	1998	4	C 20 XE	**T880C**	**T012B**		orig. / alter.-with distrib.
2.0 i 16V	02.94 - 07.97	100	1998	4	X 20 XEV	**T777C**	**T986B**		original / alternative
2.0 i 16V 4x4	06.90 - 02.94	110	1998	4	C 20 XE	**T777C**	**T986B**		original / alternative
	06.90 - 02.94	110	1998	4	C 20 XE	**T880C**	**T012B**		orig. / alter.-with distrib.
2.0 i 16V 4x4	02.94 - 07.97	100	1998	4	X 20 XEV	**T777C**	**T986B**		original / alternative
2.0 i Turbo 4x4	03.92 - 07.97	150	1998	4	C 20 LET	**T881C**	**T011B**		original / alternative
2.5 i V6	04.93 - 07.97	125	2498	6	X 25 XE/C 25 XE	**T951C**	**T993B**		original / alternative
Campo (TF_)									
2.3	08.91 - 08.94	69	2255	4	4 ZD1	**T285B**			
2.3	08.94 - 09.96	72	2254	4	4 ZD1/23 P	**T294B**			
2.3 4x4	08.91 - 08.94	69	2255	4	4 ZD1	**T285B**			
2.3 4x4	08.94 - 09.96	72	2254	4	4 ZD1	**T294B**			
Combo (71_)									
1.2	07.94 - 10.01	33	1195	4	C 12 NZ/X 12 SZ	**T962B**			
1.4	07.94 - 10.01	44	1389	4	C 14 NZ/X 14 SZ	**T288B**			
1.4	07.94 - 10.01	60	1389	4	C 14 SE	**T629B**			
Combo Tour									
1.6	10.01 -	64	1598	4	Z 16 SE	**T862B**			
Combo Van/Combi									
1.6	10.01 -	64	1598	4	Z 16 SE	**T862B**			
Commodore C									
2.5 S	12.80 - 12.82	85	2490	6	25 S	**T769B**			
2.5 E	12.80 - 12.82	96	2490	6	25 E	**T769B**			
Corsa A CC (93_, 94_, 98_, 99_)									
1.0	09.82 - 03.93	33	993	4	10 S	**T762B**			

OPEL Corsa A CC (93_, 94_, 98_, 99_) ▶

model	year	kW	cm³	cyl	engine	I	II	III	info
Corsa A CC (93_, 94_, 98_, 99_)									
1.2	09.82 - 08.90	33	1196	4	E 12 GV/12 NC	**T288B**			PIN
	09.82 - 08.90	33	1196	4	E 12 GV/12 NC	**T762B**			DIN
1.2	09.82 - 08.90	44	1196	4	12 S	**T763B**			
1.2 i	09.89 - 03.93	33	1195	4	C 12 NZ	**T273B**			SAE
	09.89 - 03.93	33	1195	4	C 12 NZ	**T288B**			PIN
	09.89 - 03.93	33	1195	4	C 12 NZ	**T962B**			PIN
1.2 N	01.90 - 03.93	38	1196	4	12 NV	**T763B**			
1.2 S	09.82 - 02.90	40	1196	4	12 ST	**T763B**			
1.3	09.85 - 10.89	44	1297	4	13 NB	**T763B**			
1.3 GL	09.82 - 03.93	55	1297	4	13 S	**T763B**			
1.3 i	09.86 - 09.90	44	1297	4	C 13 N	**T763B**			
1.3 S	09.82 - 10.89	51	1297	4	13 SB	**T763B**			
1.4 i	01.90 - 03.93	44	1389	4	C 14 NZ	**T273B**			SAE
	01.90 - 03.93	44	1389	4	C 14 NZ	**T288B**			PIN
1.4 S	01.90 - 03.93	53	1389	4	14 NV	**T288B**			
1.4 Si	09.91 - 03.93	60	1389	4	C 14 SE	**T288B**			
	09.91 - 03.93	60	1389	4	C 14 SE	**T962B**			Mot. No. -02T14052
	09.91 - 03.93	60	1389	4	C 14 SE	**T996B**			Mot. No. 02T14053-
1.6 GSI	09.89 - 03.93	72	1598	4	C 16 SEI	**T286B**			with distributor
	09.89 - 03.93	72	1598	4	C 16 SEI	**T766B**			without distributor
1.6 GSI	05.88 - 03.92	74	1598	4	E 16 SE	**T273B**			SAE
	05.88 - 03.92	74	1598	4	E 16 SE	**T286B**			PIN
1.6 GSI	08.88 - 09.92	55	1598	4	C 16 NZ	**T162B**			
1.6 GSI cat	02.92 - 03.93	74	1598	4	C 16 SE	**T286B**			Mot. No. 02V57974-
	02.92 - 03.93	74	1598	4	C 16 SE	**T766B**			
Corsa A TR (91_, 92_, 96_, 97_)									
1.0	09.82 - 09.92	33	993	4	10 S	**T762B**			DIN
	09.82 - 09.92	33	993	4	10 S	**T763B**			SAE
1.2 i	09.89 - 03.93	33	1195	4	C 12 NZ	**T273B**			SAE
	09.89 - 03.93	33	1195	4	C 12 NZ	**T288B**			PIN
	09.89 - 03.93	33	1195	4	C 12 NZ	**T962B**			PIN
1.2 N	01.85 - 10.87	33	1196	4	E 12 GV/12 NC	**T762B**			
1.2 S	09.82 - 03.93	40	1196	4	12 ST	**T763B**			
1.2 S	09.82 - 10.87	43	1196	4	12 S	**T763B**			
1.3	09.85 - 10.87	44	1297	4	13 NB/C 13 N	**T763B**			
1.3 GL	09.82 - 03.93	55	1297	4	13 S	**T763B**			
1.3 S	09.82 - 10.87	51	1297	4	13 SB	**T763B**			
1.4 i	10.89 - 03.93	44	1389	4	C 14 NZ	**T273B**			SAE
	10.89 - 03.93	44	1389	4	C 14 NZ	**T288B**			PIN
	10.89 - 03.93	44	1389	4	C 14 NZ	**T962B**			PIN
1.4 S	09.89 - 03.93	53	1389	4	14 NV	**T288B**			system Lucas
	09.89 - 03.93	53	1389	4	14 NV	**T962B**			
Corsa A Van									
1.0	02.86 - 04.89	33	993	4	10 S	**T762B**			DIN
	02.86 - 04.89	33	993	4	10 S	**T763B**			SAE
1.2	02.86 - 04.89	33	1196	4	E 12 GV/12 NC	**T762B**			
1.2	02.86 - 04.89	40	1196	4	12 ST	**T763B**			
1.2	02.86 - 07.90	44	1196	4	12 S	**T763B**			
1.3	02.86 - 04.89	44	1297	4	13 NB	**T763B**			
1.3	02.86 - 04.89	51	1297	4	13 SB	**T763B**			
Corsa B (73_, 78_, 79_)									
1.2 i	03.93 - 09.00	33	1195	4	X 12 SZ	**T629B**			
	03.93 - 09.00	33	1195	4	C 12 NZ	**T765B**			
	03.93 - 09.00	33	1195	4	C 12 NZ	**T962B**			Mot. No. -19334656
	03.93 - 09.00	33	1195	4	X 12 SZ	**T996B**			Mot. No. -19552964
1.2 i	03.93 - 09.00	33	1195	4	12 NZ	**T765B**			Mot. No. 19334657-
	03.93 - 09.00	33	1195	4	12 NZ	**T962B**			Mot. No. -19334656
1.4 i	03.93 - 09.00	44	1389	4	X 14 SZ	**T629B**			without distributor
	03.93 - 09.00	44	1389	4	C 14 NZ	**T765B**			
	03.93 - 09.00	44	1389	4	C 14 NZ	**T962B**			Mot. No. -02BF1475,-19241622
1.4 i 16V	09.94 - 09.00	66	1389	4	X 14 XE	**T289C**	**T096B**		orig. / alter., Mot. No. -20C71331
	09.94 - 09.00	66	1389	4	X 14 XE	**T928C**	**T991B**		orig. / alter., Mot. No. 20C71332-
1.4 i 16V	08.97 - 09.00	63	1389	4	C 14 SEL	**T928C**	**T991B**		original / alternative
1.4 i 16V	09.94 - 09.00	67	1389	4	X 14 XE	**T778C**	**T987B**		original / alternative
1.4 Si	03.93 - 09.00	60	1389	4	C 14 SE	**T629B**			
	03.93 - 09.00	60	1389	4	C 14 SE	**T996B**			Mot. No. 02V57975-02BD0921
1.6 GSI 16V	03.93 - 09.00	80	1598	4	C 16 XE	**T289C**	**T096B**		orig. / alter., Mot. No. -20C71331
	03.93 - 09.00	80	1598	4	C 16 XE	**T928C**	**T991B**		orig. / alter., Mot. No. 20C71332-
1.6 i 16V	09.94 - 09.00	78	1598	4	X 16 XE	**T289C**	**T096B**		orig. / alter., Mot. No. -20C71331
	09.94 - 09.00	78	1598	4	X 16 XE	**T928C**	**T991B**		orig. / alter., Mot. No. 20C71332-

OPEL Corsa B (73_, 78_, 79_) ▶

model	year	kW	cm³	cyl	engine	I	II	III	info
Corsa B (73_, 78_, 79_)									
1.6 i 16V	08.97 - 09.00	74	1598	4	C 16 SEL	**T289C**	**T096B**		original / alternative
Corsa B Van (73_)									
1.4 i	08.99 - 09.00	44	1389	4	X 14 SZ	**T629B**			
Frontera A (5_MWL4)									
2.2 i	03.95 - 10.98	100	2198	4	X 22 XE	**T780C**	**T988B**		original / alternative
2.4 i	03.92 - 10.98	92	2410	4	C 24 NE	**T279B**			
Frontera A Sport (5_SUD2)									
2.0 i	03.92 - 10.98	85	1998	4	C 20 NE	**T163B**			Mot. No. -14672353
	03.92 - 10.98	85	1998	4	C 20 NE	**T322B**			Mot. No. 14672354-
	03.92 - 10.98	85	1998	4	X 20 SE	**T770B**			
Frontera B (6B_)									
2.2 i	10.98 -	100	2198	4	X 22 SE/Y 22 SE	**T780C**	**T988B**		original / alternative
Kadett D (31_-34_, 41_-44_)									
1.2	08.79 - 07.82	39	1196	4	12 N	**T762B**			
1.2 S	08.79 - 08.84	44	1196	4	12 S	**T168B**			
1.3 N	08.79 - 08.84	44	1297	4	13 N	**T168B**			
1.8 GT/E	02.83 - 08.84	85	1796	4	18 E	**T764B**			
Kadett D Caravan (35_, 36_, 45_, 46_)									
1.2	08.79 - 07.82	39	1196	4	12 N	**T762B**			
1.2 S	08.79 - 08.84	44	1196	4	12 S	**T168B**			
1.3 N	08.79 - 08.84	44	1297	4	13 N	**T168B**			
Kadett E (39_, 49_)									
1.2	09.84 - 07.86	40	1196	4	12 SC	**T762B**			
1.3 i cat	09.85 - 08.91	44	1297	4	C 13 N	**T168B**			
1.3 N	09.84 - 08.89	44	1297	4	13 NB/13 N	**T168B**			
1.3 S	09.84 - 08.87	55	1297	4	13 S	**T168B**			
1.4 i	01.90 - 08.91	44	1389	4	C 14 NZ	**T962B**			
1.4 S	01.90 - 08.91	55	1389	4	14 NV	**T962B**			
1.6 i	09.86 - 08.91	55	1598	4	E 16 NZ	**T162B**	**T267B**		cable length
1.6 i cat	09.86 - 08.91	55	1598	4	C 16 NZ/C 16 LZ	**T162B**	**T267B**		cable length
1.6 S	09.86 - 08.91	60	1598	4	16 SV	**T162B**			Mot. No. -02E85672
	09.86 - 08.91	60	1598	4	16 SV	**T962B**			Mot. No. 02N39786-
1.8	09.87 - 08.90	84	1796	4	18 E	**T764B**			
1.8 i	10.85 - 08.86	74	1796	4	C 18 NE	**T764B**			
1.8 i	09.90 - 08.91	66	1796	4	C 18 NZ	**T271B**			
1.8 i	09.84 - 08.86	85	1796	4	18 SE/18 E	**T764B**			
1.8 S	09.87 - 08.91	62	1798	4	E 18 NV	**T166B**			DIN
	09.87 - 08.91	62	1798	4	E 18 NV	**T274B**			PIN
2.0 i	03.87 - 08.91	85	1998	4	20 NE/20 SE	**T166B**			DIN
	03.87 - 08.91	85	1998	4	20 NE/20 SE	**T274B**			PIN
2.0 i cat	03.87 - 08.91	85	1998	4	C 20 NE	**T166B**			DIN
	03.87 - 08.91	85	1998	4	C 20 NE	**T274B**			PIN
Kadett E Cabriolet (43B_)									
1.3 S	03.87 - 02.93	55	1297	4	13 S	**T168B**			
1.4 i	01.90 - 08.91	44	1389	4	C 14 NZ	**T962B**			
1.4 S	08.90 - 02.93	55	1389	4	14 NV	**T962B**			
1.6 i	10.86 - 02.93	55	1598	4	E 16 NZ	**T162B**	**T267B**		cable length
1.6 i	07.89 - 02.93	60	1598	4	16 SV	**T162B**			SAE
	07.89 - 02.93	60	1598	4	16 SV	**T962B**			PIN
1.6 i cat	10.87 - 02.93	55	1598	4	C 16 NZ/C 16 LZ	**T162B**			
	10.87 - 02.93	55	1598	4	C 16 NZ/C 16 LZ	**T267B**			
2.0 i	10.86 - 02.93	85	1998	4	20 NE	**T166B**			DIN
	10.86 - 02.93	85	1998	4	20 NE	**T274B**			PIN
2.0 i cat	10.86 - 02.93	85	1998	4	C 20 NE	**T166B**			DIN
	10.86 - 02.93	85	1998	4	C 20 NE	**T274B**			PIN
Kadett E Caravan (35_, 36_, 45_, 46_)									
1.2	09.84 - 07.86	40	1196	4	12 SC	**T762B**			
1.3 i cat	09.85 - 08.91	44	1297	4	C 13 N	**T168B**			
1.3 N	09.84 - 08.91	44	1297	4	13 N	**T168B**			
1.3 S	09.84 - 08.87	55	1297	4	13 S	**T168B**			
1.4 i	01.90 - 08.91	44	1389	4	C 14 NZ	**T962B**			
1.4 S	01.90 - 08.91	55	1389	4	14 NV	**T962B**			
1.6	09.86 - 08.91	60	1598	4	16 SV	**T162B**			Mot. No. -02E85672
	09.86 - 08.91	60	1598	4	16 SV	**T962B**			Mot. No. 02N39786-
1.6 i	09.86 - 08.91	55	1598	4	E 16 NZ	**T162B**	**T267B**		cable length
1.6 i cat	09.86 - 08.91	55	1598	4	C 16 NZ/C 16 LZ	**T162B**	**T267B**		cable length
1.8 E	10.85 - 08.86	74	1796	4	C 18 NE	**T764B**			
1.8 i	06.85 - 08.91	66	1796	4	C 18 NZ/C 18 NT	**T271B**			
1.8 i	09.84 - 08.86	85	1796	4	18 E	**T764B**			

OPEL Kadett E Caravan (35_, 36_, 45_, 46_)

model	year	kW	cm³	cyl	engine	I	II	III	info
Kadett E Caravan (35_, 36_, 45_, 46_)									
1.8 S	09.87 - 08.91	62	1796	4	E 18 NV	**T166B**			DIN
	09.87 - 08.91	62	1796	4	E 18 NV	**T274B**			PIN
2.0 i	09.87 - 08.91	85	1998	4	20 NE	**T166B**			DIN
	09.87 - 08.91	85	1998	4	20 NE	**T274B**			PIN
2.0 i cat	09.87 - 08.91	85	1998	4	C 20 NE	**T166B**			DIN
	09.87 - 08.91	85	1998	4	C 20 NE	**T274B**			PIN
Kadett E CC (33_, 34_, 43_, 44_)									
1.2	09.84 - 07.86	40	1196	4	12 SC	**T762B**			
1.3 i cat	09.85 - 08.91	44	1297	4	C 13 N	**T168B**			
1.3 N	09.84 - 08.91	44	1297	4	13 NB/13 N	**T168B**			
1.3 S	09.84 - 08.87	55	1297	4	13 S	**T168B**			
1.4 i	01.90 - 08.91	44	1389	4	C 14 NZ	**T962B**			
1.4 S	01.90 - 08.91	55	1389	4	14 NV	**T962B**			
1.6 i	09.86 - 08.91	55	1598	4	E 16 NZ	**T162B**	**T267B**		cable length
1.6 i cat	09.86 - 08.91	55	1598	4	C 16 NZ/C 16 LZ	**T162B**	**T267B**		cable length
1.6 S	09.86 - 08.91	60	1598	4	16 SV	**T162B**			Mot. No. -02E85672
	09.86 - 08.91	60	1598	4	16 SV	**T962B**			Mot. No. 02N39786-
1.8 E	10.85 - 08.86	74	1796	4	C 18 NE	**T764B**			
1.8 GSI	09.84 - 08.86	85	1796	4	18 E	**T764B**			
1.8 i	06.85 - 08.91	66	1796	4	C 18 NZ	**T271B**			
1.8 S	09.87 - 08.91	62	1796	4	E 18 NV/S 18 NV	**T166B**			DIN
	09.87 - 08.91	62	1796	4	E 18 NV/S 18 NV	**T274B**			PIN
2.0 GSI	09.86 - 08.91	85	1998	4	20 NE	**T166B**			DIN
	09.86 - 08.91	85	1998	4	20 NE	**T274B**			PIN
2.0 GSI	09.86 - 08.91	95	1998	4	20 SEH	**T166B**			DIN
	09.86 - 08.91	95	1998	4	20 SEH	**T274B**			PIN
2.0 GSI 16V	03.88 - 08.91	110	1998	4	20 XEJ	**T881C**	**T011B**		original / alternative
2.0 GSI 16V	12.87 - 08.91	115	1998	4	20 XE	**T881C**	**T011B**		original / alternative
2.0 GSI 16V cat	03.88 - 08.91	110	1998	4	C 20 XE	**T881C**	**T011B**		original / alternative
2.0 GSI cat	09.86 - 08.91	85	1998	4	C 20 NE	**T166B**			DIN
	09.86 - 08.91	85	1998	4	C 20 NE	**T274B**			PIN
Kadett E Combo (38_, 48_)									
1.3 N	01.86 - 12.89	44	1297	4	13 N	**T168B**			
1.3 S	01.86 - 12.89	55	1297	4	13 S	**T168B**			
1.4 i	08.91 - 07.94	44	1389	4	C 14 NZ	**T962B**			
1.4 S	07.89 - 08.91	55	1389	4	14 NV	**T962B**			
1.6	09.86 - 12.91	60	1598	4	16 SV	**T162B**			Mot. No. -02E85672
	09.86 - 12.91	60	1598	4	16 SV	**T962B**			Mot. No. 02N39786-
1.6 i	08.91 - 07.94	55	1598	4	C 16 NZ	**T267B**			
Kadett E Van (37_, 47_)									
1.2	09.84 - 07.86	40	1196	4	12 SC	**T762B**			
1.3 N	09.84 - 07.89	44	1297	4	13 NB/13 N	**T168B**			
1.4 i	01.90 - 08.91	44	1389	4	C 14 NZ	**T962B**			
1.6 i	08.89 - 09.93	55	1598	4	C 16 NZ	**T267B**			
1.8 i	08.84 - 09.92	66	1796	4	C 18 NT	**T962B**			
Manta A (58_, 59_)									
1.6	02.75 - 08.75	44	1584	4	16 N	**T275B**			
1.6	09.70 - 08.75	50	1584	4	16 N	**T275B**			
1.6	02.75 - 08.75	55	1584	4	16 S	**T275B**			
1.6 S	09.70 - 08.75	59	1584	4	16 S	**T275B**			
1.9 S	09.70 - 08.75	66	1897	4	19 S	**T275B**			
Manta B (58_, 59_)									
1.3 S	08.81 - 08.86	55	1297	4	13 S	**T168B**			SAE
	08.81 - 08.86	55	1297	4	13 S	**T275B**			DIN
1.6 N	09.75 - 12.80	44	1584	4	16 N	**T275B**			
1.6 S	09.75 - 12.81	55	1584	4	16 S	**T275B**			
1.8 S	07.82 - 08.87	66	1796	4	18 S	**T275B**			
1.9 S	09.75 - 12.80	66	1897	4	19 S	**T275B**			
2.0 E	08.77 - 08.88	81	1979	4	20 E	**T275B**			
2.0 S	08.77 - 08.84	74	1979	4	20 S	**T275B**			
Manta B CC (53_, 55_)									
1.6	08.77 - 07.81	55	1584	4	16 S	**T275B**			
1.3 S	08.79 - 08.86	55	1297	4	13 S	**T168B**			SAE
	08.79 - 08.86	55	1297	4	13 S	**T275B**			DIN
1.6 N	09.75 - 12.80	44	1584	4	16 N	**T275B**			
1.8 S	07.82 - 08.87	66	1796	4	18 S	**T275B**			
2.0 E	08.77 - 08.88	81	1979	4	20 E	**T275B**			
2.0 S	08.77 - 08.84	74	1979	4	20 S	**T275B**			
Meriva									
1.6	05.03 - 05.10	64	1598	4	Z 16 SE	**T282B**			

OPEL Monterey A (UBS_)

model	year	kW	cm³	cyl	engine	I	II	III	info
Monterey A (UBS_)									
3.2	06.92 - 07.98	130	3165	6	6 VD1	**T281B**			
Monza A (22_)									
2.0 E	03.83 - 10.84	85	1979	4	H 20 E	**T275B**			
2.5 E	05.81 - 08.86	100	2490	6	H 25 E	**T769B**			
2.5 E	06.84 - 08.86	103	2490	6	25 E	**T769B**			
2.8	02.78 - 04.81	103	2784	6	28 H	**T769B**			
3.0	04.78 - 07.82	110	2969	6	30 H	**T769B**			
3.0 GSE	09.85 - 08.86	115	2969	6	C 30 LE	**T769B**			
3.0 GSE	02.78 - 08.86	132	2968	6	30 E	**T769B**			
Omega A (16_, 17_, 19_)									
1.8	09.87 - 03.94	65	1796	4	E 18 NVR	**T163B**			Mot. No. -2014312950
	09.87 - 03.94	65	1796	4	E 18 NVR	**T322B**			Mot. No. 2014312951-
1.8	09.86 - 03.94	85	1796	4	18 SEH	**T179B**			DIN, Mot. No. -K1000098
	09.86 - 03.94	85	1796	4	18 SEH	**T163B**			PIN, Mot. No. -2014312950
	09.86 - 03.94	85	1796	4	18 SEH	**T322B**			PIN, Mot. No. 2014312951-
1.8 N	09.86 - 08.87	60	1796	4	18 NV	**T179B**			DIN, Mot. No. -K1000098
	09.86 - 08.87	60	1796	4	18 NV	**T163B**			PIN, Mot. No. -2014312950
	09.86 - 08.87	60	1796	4	18 NV	**T322B**			PIN, Mot. No. 2014312951-
1.8 S	09.86 - 03.94	66	1796	4	18 SV	**T179B**			DIN, Mot. No. -K1000098
	09.86 - 03.94	66	1796	4	18 SV	**T163B**			PIN, Mot. No. -2014312950
	09.86 - 03.94	66	1796	4	18 SV	**T322B**			PIN, Mot. No. 2014312951-
2.0	09.86 - 03.94	90	1998	4	20 SE	**T179B**			DIN, Mot. No. -K1000098
	09.86 - 03.94	90	1998	4	20 SE	**T163B**			PIN, Mot. No. -2014312950
	09.86 - 03.94	90	1998	4	20 SE	**T322B**			PIN, Mot. No. 2014312951-
2.0	09.90 - 03.94	74	1998	4	C 20 NEF	**T163B**			Mot. No. -2014312950
	09.90 - 03.94	74	1998	4	C 20 NEF	**T322B**			Mot. No. 2014312951-
2.0	09.90 - 03.94	73	1998	4	C 20 NEJ	**T163B**			Mot. No. -2014312950
	09.90 - 03.94	73	1998	4	C 20 NEJ	**T322B**			Mot. No. 2014312951-
2.0 i	09.86 - 03.94	85	1998	4	C 20 NE	**T179B**			DIN, Mot. No. -K1000098
	09.86 - 03.94	85	1998	4	C 20 NE	**T163B**			PIN, Mot. No. -2014312950
	09.86 - 03.94	85	1998	4	C 20 NE	**T322B**			PIN, Mot. No. 2014312951-
2.4 i	09.88 - 12.90	92	2410	4	C 24 NE	**T278B**			
	01.90 - 03.94	92	2410	4	C 24 NE	**T279B**			
2.6 i	09.90 - 03.94	110	2594	6	C 26 NE	**T280B**			
3.0	03.87 - 12.87	115	2969	6	C 30 LE	**T769B**			
3.0	03.87 - 09.90	130	2969	6	30 NE	**T768B**	**T769B**		cable length
3.0 cat	03.88 - 03.94	130	2969	6	C 30 NE	**T768B**			
3.0 24V	09.89 - 03.94	147	2969	6	C 30 SEJ	**T292C**	**T093B**		original / alternative
3.0 24V	09.89 - 03.94	150	2969	6	C 30 SE	**T292C**	**T093B**		original / alternative
Omega A Caravan (66_, 67_)									
1.8	09.87 - 03.94	65	1796	4	E 18 NVR	**T163B**			Mot. No. -2014312950
	09.87 - 03.94	65	1796	4	E 18 NVR	**T322B**			Mot. No. 2014312951-
1.8	09.86 - 03.94	85	1796	4	18 SEH	**T179B**			DIN, Mot. No. -K1000098
	09.86 - 03.94	85	1796	4	18 SEH	**T163B**			PIN, Mot. No. -2014312950
	09.86 - 03.94	85	1796	4	18 SEH	**T322B**			PIN, Mot. No. 2014312951-
1.8 N	09.86 - 08.87	60	1796	4	18 NV	**T179B**			DIN, Mot. No. -K1000098
	09.86 - 08.87	60	1796	4	18 NV	**T163B**			PIN, Mot. No. -2014312950
	09.86 - 08.87	60	1796	4	18 NV	**T322B**			PIN, Mot. No. 2014312951-
1.8 S	09.86 - 03.94	66	1796	4	18 SV	**T179B**			DIN, Mot. No. -K1000098
	09.86 - 03.94	66	1796	4	18 SV	**T163B**			PIN, Mot. No. -2014312950
	09.86 - 03.94	66	1796	4	18 SV	**T322B**			PIN, Mot. No. 2014312951-
2.0	09.86 - 03.94	90	1998	4	20 SE	**T179B**			DIN, Mot. No. -K1000098
	09.86 - 03.94	90	1998	4	20 SE	**T163B**			PIN, Mot. No. -2014312950
	09.86 - 03.94	90	1998	4	20 SE	**T322B**			PIN, Mot. No. 2014312951-
2.0	09.90 - 03.94	74	1998	4	C 20 NEF	**T163B**			Mot. No. -2014312950
	09.90 - 03.94	74	1998	4	C 20 NEF	**T322B**			Mot. No. 2014312951-
2.0 i	09.90 - 03.94	73	1998	4	C 20 NEJ	**T163B**			Mot. No. -2014312950
	09.90 - 03.94	73	1998	4	C 20 NEJ	**T322B**			Mot. No. 2014312951-
2.0 i	09.86 - 03.94	85	1998	4	C 20 NE	**T179B**			DIN, Mot. No. -K1000098
	09.86 - 03.94	85	1998	4	C 20 NE	**T163B**			PIN, Mot. No. -2014312950
	09.86 - 03.94	85	1998	4	C 20 NE	**T322B**			PIN, Mot. No. 2014312951-
2.4 i	09.88 - 12.90	92	2410	4	C 24 NE	**T278B**			DIN
	01.90 - 03.94	92	2410	4	C 24 NE	**T279B**			PIN
2.6 i	09.90 - 03.94	110	2594	6	C 26 NE	**T280B**			
3.0	03.87 - 03.94	115	2969	6	C 30 LE	**T768B**			
3.0	03.87 - 09.90	130	2969	6	30 NE	**T768B**	**T769B**		cable length
3.0 24V	09.89 - 03.94	147	2969	6	C 30 SEJ	**T292C**	**T093B**		original / alternative
3.0 cat	03.87 - 03.94	130	2969	6	C 30 NE	**T768B**			
Omega B (25_, 26_, 27_)									
2.0	03.94 - 09.99	85	1998	4	X 20 SE	**T862B**			

OPEL Omega B (25_, 26_, 27_) ▶

model	year	kW	cm³	cyl	engine	I	II	III	info
Omega B (25_, 26_, 27_)									
2.0	03.94 - 12.00	85	1998	4	20 SE	**T862B**			
2.0 16V	03.94 - 09.99	100	1998	4	X 20 XEV	**T777C**	**T986B**		original / alternative
2.5 V6	03.94 - 09.00	125	2498	6	X 25 XE	**T950C**	**T992B**		original / alternative
3.0 V6	04.94 - 02.01	155	2962	6	X 30 XE	**T950C**	**T992B**		original / alternative
Omega B Caravan (21_, 22_, 23_)									
2.0	03.94 - 09.99	85	1998	4	X 20 SE	**T862B**			
2.0 16V	03.94 - 09.99	100	1998	4	X 20 XEV	**T777C**	**T986B**		original / alternative
2.5 V6	03.94 - 09.00	125	2498	6	X 25 XE	**T950C**	**T992B**		original / alternative
3.0 V6	04.94 - 02.01	155	2962	6	X 30 XE	**T950C**	**T992B**		original / alternative
Rekord E									
1.8	11.82 - 08.86	55	1796	4	18 N	**T283B**			
2.0 E	09.77 - 10.84	81	1979	4	20 E	**T275B**			
2.2 E	11.84 - 08.86	85	2197	4	22 E	**T275B**			
Senator A (29_)									
2.0 E	03.83 - 10.84	85	1979	4	H 20 E	**T275B**			
2.2 E	11.84 - 08.87	85	2197	4	22 E	**T275B**			
2.5 E	01.83 - 08.84	100	2490	6	H 25 E	**T769B**			
2.8	02.78 - 04.81	103	2784	6	28 H	**T769B**			
3.0	04.78 - 07.82	110	2969	6	30 H	**T769B**			
3.0	09.85 - 08.87	115	2969	6	C 30 LE	**T284B**			
3.0 E	02.78 - 12.86	132	2969	6	30 E	**T769B**			
Senator B (29_)									
2.5 i	09.90 - 09.93	103	2490	6	25 NE	**T284B**			
2.6 i	09.90 - 09.93	110	2594	6	C 26 NE	**T280B**			
3.0	09.87 - 09.93	115	2969	6	C 30 LE	**T284B**			
3.0	01.88 - 09.90	130	2969	6	30 NE	**T284B**			
3.0 24V	09.89 - 09.93	150	2969	6	C 30 SE	**T292C**	**T093B**		original / alternative
3.0 i cat	01.88 - 09.93	130	2969	6	C 30 NE	**T284B**			
Sintra									
2.2 i 16V	11.96 - 04.99	104	2198	4	X 22 XE	**T777C**	**T986B**		original / alternative
3.0 i 24V	11.96 - 04.99	148	2962	6	X 30 XE	**T950C**	**T992B**		original / alternative
Tigra (95_)									
1.4 16V	07.94 - 12.00	66	1389	4	X 14 XE	**T778C**	**T987B**		original / alternative
1.4 16V	08.97 - 12.00	63	1389	4	X 14 XE	**T778C**	**T987B**		original / alternative
1.6 16V	07.94 - 08.98	78	1598	4	X 16 XE	**T778C**	**T987B**		original / alternative
1.6 16V	08.97 - 08.98	74	1598	4	C 16 SEL	**T778C**	**T987B**		original / alternative
Vectra A (86_, 87_)									
1.4 S	09.88 - 12.90	55	1389	4	14 NV	**T144B**			
	09.88 - 06.92	55	1389	4	14 NV	**T962B**			Mot. No. 19585416-
	01.91 - 06.92	55	1389	4	14 NV	**T288B**			
1.6	09.88 - 05.93	60	1598	4	16 SV	**T287B**			SAE
	09.88 - 05.93	60	1598	4	16 SV	**T288B**			PIN
	09.88 - 05.93	60	1598	4	16 SV	**T962B**			PIN, Mot. No. -02N39786
1.6	08.92 - 07.93	51	1598	4	C 16 LZ2	**T870B**			
1.6 i	09.88 - 11.95	55	1598	4	C 16 NZ2/C 16 NZ/E 16 NZ	**T287B**			SAE
	09.88 - 11.95	55	1598	4	C 16 NZ2/C 16 NZ/E 16 NZ	**T962B**			PIN
1.6 i	09.93 - 11.95	52	1598	4	X 16 SZ	**T629B**			ch. No. R75,R5,R1-
	09.93 - 11.95	52	1598	4	X 16 SZ	**T996B**			ch. No. -R75,R5,R1
1.6 i	09.93 - 11.95	55	1598	4	16 LZ2	**T870B**			
1.8 i cat	03.90 - 11.95	66	1796	4	C 18 NZ	**T271B**			Mot. No. -14349310
	03.90 - 11.95	66	1796	4	C 18 NZ	**T870B**			ch. No. S1,S5,S75-
	03.90 - 11.95	66	1796	4	C 18 NZ	**T929B**			Mot. No. 14349311-
1.8 S	09.88 - 07.89	65	1796	4	E 18 NVR	**T271B**			system Bosch
	09.88 - 07.89	65	1796	4	E 18 NVR	**T870B**			ch. No. S1,S5,S75-
	09.88 - 07.89	65	1796	4	E 18 NVR	**T882B**			Mot. No. -14258179
	09.88 - 07.89	65	1796	4	E 18 NVR	**T929B**			ch. No. -R1,R5,R75
1.8 S	09.89 - 10.90	66	1796	4	18 SV	**T271B**			Mot. No. -14275381
	09.89 - 10.90	66	1796	4	18 SV	**T870B**			ch. No. S1,S5,S75-
	09.89 - 10.90	66	1796	4	18 SV	**T929B**			ch. No. -R1,R5,R75
1.8 S 4x4	01.89 - 07.89	65	1796	4	E 18 NVR	**T271B**			system Bosch
	01.89 - 07.89	65	1796	4	E 18 NVR	**T870B**			ch. No. S1,S5,S75-
	01.89 - 07.89	65	1796	4	E 18 NVR	**T882B**			Mot. No. -14258179
	01.89 - 07.89	65	1796	4	E 18 NVR	**T929B**			ch. No. -R1,R5,R75
2.0 i	09.88 - 10.90	85	1998	4	20 NE	**T271B**			system Bosch
	09.88 - 10.90	85	1998	4	20 NE	**T882B**			Mot. No. -14258179
	09.88 - 10.90	85	1998	4	20 NE	**T929B**			ch. No. -R1,R5,R75
2.0 i	06.90 - 09.92	95	1998	4	20 SEH	**T271B**			
	09.88 - 06.90	95	1998	4	20 SEH	**T883B**			

OPEL Vectra A (86_, 87_) ▶

model	year	kW	cm³	cyl	engine	I	II	III	info
Vectra A (86_, 87_)									
2.0 i cat	09.88 - 11.95	85	1998	4	C 20 NE	**T271B**			Mot. No. -14275381
	09.88 - 11.95	85	1998	4	C 20 NE	**T870B**			ch. No. S1,S5,S75-
	09.88 - 11.95	85	1998	4	C 20 NE	**T882B**			
	09.88 - 11.95	85	1998	4	C 20 NE	**T929B**			ch. No. -R1,R5,R75
2.0 i 4x4	01.89 - 10.90	85	1998	4	20 NE	**T271B**			system Bosch
	01.89 - 10.90	85	1998	4	20 NE	**T882B**			Mot. No. -14258179
	01.89 - 10.90	85	1998	4	20 NE	**T929B**			ch. No. -R1,R5,R75
2.0 i 4x4	06.90 - 09.92	95	1998	4	20 SEH	**T271B**			
	09.88 - 06.90	95	1998	4	20 SEH	**T883B**			
2.0 i 4x4 cat	01.89 - 11.95	85	1998	4	C 20 NE	**T271B**			Mot. No. -14275381
	01.89 - 11.95	85	1998	4	C 20 NE	**T870B**			ch. No. S1,S5,S75-
	01.89 - 11.95	85	1998	4	C 20 NE	**T882B**			
	01.89 - 11.95	85	1998	4	C 20 NE	**T929B**			ch. No. -R1,R5,R75
2.0 i 16V	06.94 - 11.95	100	1998	4	X 20 XEV	**T777C**	**T986B**		original / alternative
2.0 i 16V 4x4	06.94 - 11.95	100	1998	4	X 20 XEV	**T777C**	**T986B**		original / alternative
2.0 i Turbo 4x4	06.94 - 11.95	150	1998	4	C 20 LET	**T881C**	**T011B**		original / alternative
2.5 CD 4x4	08.92 - 08.95	125	2498	6	C 25 XE	**T951C**	**T993B**		original / alternative
2.5 V6	02.93 - 11.95	125	2498	6	C 25 XE	**T951C**	**T993B**		original / alternative
2000 16V 4x4	01.89 - 10.90	110	1998	4	20 XEJ	**T881C**	**T011B**		original / alternative
2000/GT 16V	01.89 - 06.94	110	1998	4	20 XEJ	**T881C**	**T011B**		original / alternative
2000/GT 16V 4x4 cat	02.90 - 11.95	110	1998	4	C 20 XE	**T881C**	**T011B**		original / alternative
2000/GT 16V cat	02.90 - 11.95	110	1998	4	C 20 XE	**T880C**	**T012B**		original / alternative
Vectra A CC (88_, 89_)									
1.4 S	09.88 - 12.90	55	1389	4	14 NV	**T144B**			DIN
	01.91 - 06.92	55	1389	4	14 NV	**T288B**			PIN
	04.88 - 06.92	55	1389	4	14 NV	**T962B**			PIN, Mot. No. 19585416-
1.6 i	09.93 - 11.95	52	1598	4	X 16 SZ	**T629B**			ch. No. R75,R5,R1-
	09.93 - 11.95	52	1598	4	X 16 SZ	**T996B**			ch. No. -R75,R5,R1
1.6 i	09.93 - 11.95	55	1598	4	16 LZ2	**T870B**			
1.6 i cat	09.88 - 11.95	55	1598	4	C 16 NZ	**T287B**			SAE
	09.88 - 11.95	55	1598	4	C 16 NZ2	**T870B**			
	09.88 - 11.95	55	1598	4	C 16 NZ	**T962B**			PIN
1.6 S	09.88 - 12.90	60	1598	4	16 SV	**T287B**			SAE
	01.91 - 05.93	60	1598	4	16 SV	**T288B**			PIN
	09.88 - 05.93	60	1598	4	16 SV	**T962B**			PIN, Mot. No. -02N39786
1.8 i	09.88 - 10.90	66	1796	4	18 SV	**T271B**			Mot. No. -14275381
	09.88 - 10.90	66	1796	4	18 SV	**T870B**			ch. No. S1,S5,S75-
	09.88 - 10.90	66	1796	4	18 SV	**T929B**			ch. No. -R1,R5,R75
1.8 i cat	03.90 - 11.95	66	1796	4	C 18 NZ	**T271B**			Mot. No. -14349310
	03.90 - 11.95	66	1796	4	C 18 NZ	**T870B**			ch. No. S1,S5,S75-
	03.90 - 11.95	66	1796	4	C 18 NZ	**T929B**			Mot. No. 14349311-
1.8 S	09.88 - 07.89	65	1796	4	E 18 NVR	**T271B**			system Bosch
	09.88 - 07.89	65	1796	4	E 18 NVR	**T870B**			ch. No. S1,S5,S75-
	09.88 - 07.89	65	1796	4	E 18 NVR	**T882B**			DIN, Mot. No. -14258179
	09.88 - 07.89	65	1796	4	E 18 NVR	**T929B**			ch. No. -R1,R5,R75
2.0 i	09.88 - 10.90	85	1998	4	20 NE	**T271B**			system Bosch
	09.88 - 10.90	85	1998	4	20 NE	**T882B**			DIN, Mot. No. -14258179
	09.88 - 10.90	85	1998	4	20 NE	**T929B**			ch. No. -R1,R5,R75
2.0 i cat	09.88 - 11.95	85	1998	4	C 20 NE	**T271B**			Mot. No. -14275381
	09.88 - 11.95	85	1998	4	C 20 NE	**T870B**			ch. No. S1,S5,S75-
	09.88 - 11.95	85	1998	4	C 20 NE	**T882B**			
	09.88 - 11.95	85	1998	4	C 20 NE	**T929B**			ch. No. -R1,R5,R75
2.0 i GT	09.88 - 06.90	95	1998	4	20 SEH	**T883B**			DIN
	06.90 - 11.95	95	1998	4	20 SEH	**T271B**			PIN
2.0 i 16V	02.89 - 10.90	110	1998	4	20 XEJ	**T880C**	**T012B**		original / alternative
2.0 i 16V	06.94 - 11.95	100	1998	4	X 20 XEV	**T777C**	**T986B**		original / alternative
2.0 i 16V cat	02.90 - 11.95	110	1998	4	C 20 XE	**T777C**	**T986B**		orig. / alter., without distrib.
	02.90 - 11.95	110	1998	4	C 20 XE	**T880C**	**T012B**		orig. / alter., with distributor
2.5 V6	02.93 - 11.95	125	2498	6	C 25 XE	**T951C**	**T993B**		original / alternative
Vectra B (36_)									
1.6 i	10.95 - 04.02	55	1598	4	X 16 SZR	**T629B**			
1.6 i	10.95 - 04.02	55	1598	4	16 LZ2	**T870B**			
1.6 i 16V	10.95 - 04.02	74	1598	4	Z 16 XE/X 16 XEL/Y 16 XE	**T289C**	**T096B**		orig./alter.-boot 130 mm
	10.95 - 04.02	74	1598	4	Z 16 XE/X 16 XEL/Y 16 XE	**T928C**	**T991B**		orig./alter.-boot 115 mm
1.8 i 16V	10.95 - 09.00	85	1796	4	X 18 XE1	**T777C**	**T986B**		original / alternative
1.8 i 16V	10.95 - 09.00	85	1799	4	X 18 XE	**T777C**	**T986B**		original / alternative
2.0 i	10.95 - 04.02	82	1998	4	20 NEJ	**T862B**			
2.0 i 16V	10.95 - 09.00	100	1998	4	X 20 XEV/C 20 SEL	**T777C**	**T986B**		original / alternative
2.5 i V6	10.95 - 09.00	125	2498	6	X 25 XE	**T951C**	**T993B**		original / alternative
i 500 2.5	05.98 - 09.00	143	2498	6	X 25 XE	**T951C**	**T993B**		original / alternative

OPEL Vectra B Caravan (31_)

model	year	kW	cm³	cyl	engine	I	II	III	info
Vectra B Caravan (31_)									
1.6 i	11.96 - 06.00	55	1598	4	X 16 SZR	**T629B**			
1.6 i	11.96 - 06.00	55	1598	4	16 LZ2	**T870B**			
1.6 i 16V	11.96 - 07.02	74	1598	4	Z 16 XE/X 16 XEL/Y 16 XE	**T289C**	**T096B**		orig./alter.-boot 130 mm
	11.96 - 07.02	74	1598	4	Z 16 XE/X 16 XEL/Y 16 XE	**T928C**	**T991B**		orig./alter.-boot 115 mm
1.8 i 16V	11.96 - 09.00	85	1796	4	X 18 XE1	**T777C**	**T986B**		original / alternative
1.8 i 16V	11.96 - 09.00	85	1799	4	X 18 XE	**T777C**	**T986B**		original / alternative
2.0 i	11.96 - 02.02	82	1998	4	20 NEJ	**T862B**			
2.0 i 16V	11.96 - 09.00	100	1998	4	X 20 XEV/C 20 SEL	**T777C**	**T986B**		original / alternative
2.5 i V6	11.96 - 09.00	125	2498	6	X 25 XE	**T951C**	**T993B**		original / alternative
i 500 2.5	05.98 - 09.00	143	2498	6	X 25 XE	**T951C**	**T993B**		original / alternative
Vectra B CC (38_)									
1.6 i	10.95 - 07.03	55	1598	4	X 16 SZR	**T629B**			
1.6 i	10.95 - 07.03	55	1598	4	16 LZ2	**T870B**			
1.6 i 16V	10.95 - 07.02	74	1598	4	Z 16 XE/X 16 XEL/Y 16 XE	**T289C**	**T096B**		orig./alter.-boot 130 mm
	10.95 - 07.02	74	1598	4	Z 16 XE/X 16 XEL/Y 16 XE	**T928C**	**T991B**		orig./alter.-boot 115 mm
1.8 i 16V	10.95 - 09.00	85	1796	4	X 18 XE1	**T777C**	**T986B**		original / alternative
1.8 i 16V	10.95 - 09.00	85	1799	4	X 18 XE	**T777C**	**T986B**		original / alternative
2.0 i	10.95 - 02.02	82	1998	4	20 NEJ	**T862B**			
2.0 i 16V	10.95 - 09.00	100	1998	4	X 20 XEV/C 20 SEL	**T777C**	**T986B**		original / alternative
2.5 i V6	10.95 - 09.00	125	2498	6	X 25 XE	**T951C**	**T993B**		original / alternative
Zafira A (F75_)									
1.6 16V	04.99 - 06.05	74	1598	4	Z 16 XE/X 16 XEL	**T928C**	**T991B**		original / alternative
1.6 CNG	09.01 - 06.05	71	1598	4	Z 16 YNG	**T282B**			
1.8 16V	04.99 - 09.00	85	1796	4	X 18 XE1	**T777C**	**T986B**		original / alternative
PEUGEOT									
106 I (1A, 1C)									
1.0	09.91 - 04.96	33	954	4	TU9/CDY (TU9M)	**T728B**			SAE
	09.91 - 04.96	33	954	4	TU9/CDY (TU9M)	**T815B**			PIN
1.0	09.91 - 04.96	37	954	4	CDZ (TU9M)	**T815B**			
1.1	09.91 - 04.96	44	1124	4	HDZ (TU1M)	**T728B**			SAE
	09.91 - 04.96	44	1124	4	HDZ (TU1M)	**T815B**			PIN
1.3	10.93 - 04.96	72	1294	4	TU2J2	**T815B**			
1.4	08.91 - 03.96	51	1360	4	K5A (TU3)	**T728B**			
1.4	09.91 - 06.93	55	1361	4	KDY (TU3M)	**T728B**			SAE
	06.93 - 04.96	55	1361	4	KDX (TU3MC)	**T815B**			PIN
1.4	09.91 - 04.96	69	1361	4	KFZ (TU3J2/Z)	**T815B**			
1.6	06.93 - 04.96	65	1587	4	NFZ (TU5JP)	**T815B**			
1.6	01.94 - 04.96	76	1587	4	NFY (TU5J2)	**T815B**			
106 II (1)									
1.0 i	05.96 -	33	954	4	CDY (TU9M)	**T815B**			
1.0 i	01.97 -	37	954	4	CDZ (TU9M)	**T815B**			
1.1 i	01.97 - 06.00	40	1124	4	HDY (TU1M)	**T815B**			
1.1 i	05.96 -	44	1124	4	HDZ (TU1M)	**T815B**			
1.4 i	05.96 - 06.97	55	1360	4	KFX (TU3JP)/KFW (TU3JP)	**T815B**			
1.6 i	05.96 -	65	1587	4	NFZ (TU5JP)	**T815B**			
1.6 i	05.96 -	74	1587	4	NFW (TU5J2)/NFY (TU5J2)	**T815B**			
205 I (741A/C)									
1.0	02.83 - 10.87	33	954	4	108C (XV8)	**T906B**			
1.1	02.83 - 10.87	36	1124	4	109N (XW7)	**T291B**			
1.1	02.83 - 10.87	37	1124	4	109F (XW7)	**T906B**			
1.3	02.84 - 10.87	47	1294	4	G1A	**T290B**			
1.4	02.83 - 10.87	44	1360	4	150D (XY7)/150G (XY7)	**T906B**			
1.4	02.83 - 10.87	53	1360	4	150 (XY6B)	**T291B**			
1.4	10.85 - 10.87	58	1360	4	150H (XY8)	**T906B**			
1.4	02.83 - 10.87	59	1360	4	150B (XY8)	**T906B**			
1.5	02.84 - 10.87	63	1442	4	Y2/K	**T290B**			
1.6	08.86 - 10.87	55	1580	4	B1A (XU51C)	**T494B**			
1.6	08.86 - 10.87	55	1580	4	BAZ (XU5CP)	**T291B**			
1.6 GTI	12.84 - 10.87	76	1580	4	180A (XU5J)	**T494B**			
205 I Cabriolet (741B, 20D)									
1.1 CJ	10.89 - 12.94	44	1124	4	HDZ (TU1M)	**T728B**			
1.4	08.87 - 06.94	62	1360	4	K2B (TU3S)	**T728B**			
1.4 CJ	03.88 - 05.89	44	1360	4	150D (XY7)/150G (XY7)	**T728B**			SAE
	03.88 - 05.89	44	1360	4	150D (XY7)/150G (XY7)	**T906B**			DIN
1.4 CJ	03.89 - 12.94	49	1360	4	K1D (TU3A)	**T728B**			
1.4 CJ	05.91 - 12.94	55	1361	4	KDZ (TU3M)/KDY (TU3M)	**T728B**			
1.4 CJ cat	01.89 - 09.93	44	1361	4	KAY (TU3CP)	**T728B**			SAE
	01.89 - 09.93	44	1361	4	KAY (TU3CP)	**T906B**			DIN
1.4 CT	04.86 - 12.88	58	1360	4	150B (XY8)/150H (XY8)	**T906B**			

PEUGEOT 205 I Cabriolet (741B, 20D) ▶

model	year	kW	cm³	cyl	engine	I	II	III	info
205 I Cabriolet (741B, 20D)									
1.6 CJ	08.92 - 12.94	65	1580	4	BDY (XU5M3Z)	**T497B**			
1.6 CTI	04.86 - 10.90	76	1580	4	180A (XU5J)/180Z (XU5J)	**T494B**			
1.9 CTI	01.91 - 12.94	75	1905	4	DFZ (XU9J1)	**T905B**			year
205 II (20A/C)									
1.0	10.87 - 09.98	33	954	4	TU9	**T728B**			
1.1	10.87 - 10.90	36	1124	4	109N (XW7)	**T906B**			
1.1	10.87 - 10.90	40	1124	4	H1B (TU1)	**T728B**			
1.1	07.89 - 09.98	44	1124	4	HDZ (TU1M)	**T728B**			
1.1 XA	07.87 - 10.88	40	1118	4	E1	**T290B**			
1.3	08.90 - 07.92	47	1294	4	G1A	**T290B**			
1.3 Rallye	10.87 - 10.90	74	1294	4	TU24	**T728B**			
1.4	10.87 - 05.89	44	1360	4	150D (XY7)/150G (XY7)	**T728B**			SAE
	10.87 - 05.89	44	1360	4	150D (XY7)/150G (XY7)	**T906B**			DIN
1.4	10.87 - 10.90	49	1360	4	K1D (TU3A)	**T728B**			
1.4	01.87 - 07.88	53	1360	4	150 (XY6B)	**T291B**			
1.4	07.88 - 09.98	55	1361	4	KFX / KDZ / KDY (TU3M)	**T728B**			
1.4	07.88 - 05.89	58	1360	4	150B (XY8)/150H (XY8)	**T906B**			
1.4	06.87 - 12.89	62	1360	4	K2B (TU3S)	**T728B**			SAE
	06.87 - 12.89	62	1360	4	K2B (TU3S)	**T815B**			PIN
1.4 cat	08.87 - 09.93	44	1360	4	KAY (TU3CP)	**T728B**			
1.6	10.87 - 09.98	53	1580	4	B1E (XU51C)	**T496B**			
1.6	10.87 - 01.90	55	1580	4	BAZ (XU5CP)/B1A (XU51C)	**T291B**			DIN
	01.90 - 09.98	55	1580	4	B1A (XU51C)	**T496B**			SAE
1.6 Aut.	05.90 - 09.98	65	1580	4	BDY (XU5M2Z, XU5M3Z)	**T497B**			
1.6 GTI	10.87 - 12.89	76	1580	4	180A (XU5J)/180Z (XU5J)	**T494B**			
1.6 GTI	10.87 - 12.89	85	1580	4		**T494B**			
1.9 GTI	01.91 - 09.98	94	1905	4	D6B (XU9JA)	**T905B**			year
1.9 GTI	10.87 - 05.89	75	1905	4	D2A (XU92C)	**T494B**			
1.9 GTI	01.91 - 10.94	88	1905	4	DKZ (XU9JAZ)	**T905B**			year
1.9 GTI cat	10.87 - 07.94	75	1905	4	DFZ (XU9J1)	**T494B**			
206 CC (2A/C)									
1.1 i	09.98 -	44	1124	4	HFZ (TU1JP)/HFX (TU1JP)	**T815B**			
305 II (581M)									
1.6	10.82 - 06.84	71	1580	4	171 (XU5S)	**T494B**			
1.6	10.82 - 07.88	55	1580	4	B1A (XU51C)	**T494B**			
1.6	07.84 - 08.87	66	1580	4	171 (XU5S)	**T494B**			
1.6	11.86 - 12.88	54	1580	4	BAZ (XU5CP)	**T494B**			
1.9	10.82 - 08.85	75	1905	4	159 (XU9S)	**T494B**			
1.9	11.86 - 12.88	72	1905	4	DFZ (XU9J1)	**T494B**			
305 II Break (581E)									
1.6	09.83 - 06.84	71	1580	4	171 (XU5S)	**T494B**			
1.6	07.84 - 12.87	66	1580	4	171 (XU5S)	**T494B**			
1.6	02.86 - 12.88	55	1580	4	B1A (XU51C)	**T494B**			
1.6	11.86 - 12.88	54	1580	4	BAZ (XU5CP)	**T494B**			
1.9	09.84 - 10.87	75	1905	4	159 (XU9S)	**T494B**			
1.9	11.86 - 12.88	72	1905	4	DFZ (XU9J1)	**T494B**			
306 (7B, N3, N5)									
1.1	06.94 - 05.01	44	1124	4	HDZ (TU1M)	**T815B**			
1.4 SL	06.94 - 06.97	55	1360	4	KDX / KFX / KFW (TU3JP)	**T815B**			
1.6 SR	06.94 - 06.97	65	1587	4	NFZ (TU5JP)	**T815B**			
1.8 16V	03.97 - 05.01	81	1761	4	LFY (XU7JP4)	**T497B**			
1.8 ST	06.94 - 05.01	74	1762	4	LFZ (XU7JP)	**T497B**			
2.0	03.97 - 05.01	97	1998	4	RFV (XU10J4R)	**T498B**			
2.0 ST	07.94 - 05.01	89	1998	4	RFX (XU10J2)	**T498B**			
306 Break (7E, N3, N5)									
1.4	03.97 - 05.98	55	1360	4	KFX (TU3JP)/KFW (TU3JP)	**T815B**			
1.6	03.97 - 07.98	65	1587	4	NFZ (TU5JP)	**T815B**			
1.8	03.97 - 04.02	74	1762	4	LFZ (XU7JP)	**T497B**			
1.8 16V	03.97 - 04.02	81	1761	4	LFY (XU7JP4)	**T497B**			
2.0	03.97 - 04.02	97	1998	4	RFV (XU10J4R)	**T498B**			
306 Cabriolet (7D, N3, N5)									
1.6	04.96 - 10.00	65	1587	4	NFZ (TU5JP)	**T815B**			
1.8	03.94 - 04.02	74	1762	4	LFZ (XU7JP)	**T497B**			
1.8 16V	07.00 - 04.02	81	1761	4	LFY (XU7JP4)	**T497B**			
2.0	03.94 - 04.02	89	1998	4	RFX (XU10J2)	**T498B**			
2.0 16V	03.97 - 12.97	97	1998	4	RFV (XU10J4R)	**T498B**			
306 CC (7A, 7C, N3, N5)									
1.1	05.93 - 05.01	44	1124	4	HDZ (TU1M)	**T815B**			
1.4	05.93 - 05.97	55	1360	4	KDX / KFX / KFW (TU3JP)	**T815B**			
1.6	05.93 - 10.00	65	1587	4	NFZ (TU5JP)	**T815B**			

PEUGEOT 306 CC (7A, 7C, N3, N5) ▶

model	year	kW	cm³	cyl	engine	I	II	III	info
306 CC (7A, 7C, N3, N5)									
1.8	05.93 - 05.01	74	1762	4	LFZ (XU7JP)	**T497B**			
1.8 16V	03.97 - 05.01	81	1761	4	LFY (XU7JP4)	**T497B**			
2.0 16V	03.97 - 12.97	97	1998	4	RFV (XU10J4R)	**T498B**			
2.0 XSi	05.93 - 05.01	89	1998	4	RFX (XU10J2)	**T498B**			
309 I (10C, 10A)									
1.1	10.85 - 07.89	40	1118	4	E1	**T290B**			
1.3	10.85 - 07.89	47	1294	4	G1A	**T290B**			
1.3 XL	09.86 - 08.89	52	1294	4		**T290B**			
1.4	03.89 - 07.89	49	1360	4	K1D (TU3A)	**T728B**			
1.4	03.89 - 07.89	55	1360	4	KDZ (TU3M)/KDY (TU3M)	**T728B**			
1.4	03.89 - 07.89	62	1360	4	K2B (TU3S)	**T728B**			
1.6	08.87 - 07.89	53	1580	4	B1E (XU51C)	**T494B**			
1.6	10.85 - 07.89	55	1580	4	B1A (XU51C)	**T494B**			
1.6	11.85 - 09.88	76	1580	4	180Z (XU5J)/B6B (XU5J)	**T494B**			DIN
	11.85 - 09.88	76	1580	4	180Z (XU5J)/B6B (XU5J)	**T728B**			SAE
1.6	01.86 - 07.89	69	1592	4		**T496B**			
1.6	07.86 - 06.89	83	1580	4		**T494B**			
1.6 cat	09.86 - 12.89	55	1580	4	BAZ (XU5CP)	**T494B**			
1.9	03.86 - 07.89	72	1905	4	DFZ (XU9J1)	**T494B**			
1.9	10.85 - 07.89	75	1905	4	D2B (XU9S)	**T494B**			
1.9	07.88 - 07.89	80	1905	4	DDZ (XU9M)	**T496B**			
309 II (3C, 3A)									
1.1	08.90 - 12.93	44	1124	4	HDZ (TU1M)	**T728B**			
1.4	07.89 - 12.93	55	1361	4	KDZ (TU3M)/KDY (TU3M)	**T728B**			
1.4	07.90 - 12.93	49	1361	4	K1D (TU3A)	**T728B**			
1.6	07.89 - 12.93	65	1580	4	BDY / BDZ (XU5M)	**T496B**			SAE
	07.89 - 12.93	65	1580	4	BDY / BDZ (XU5M)	**T497B**			PIN
1.6	07.89 - 12.93	69	1580	4	B2A (XU52C/K)	**T496B**			
1.6	07.89 - 12.93	68	1580	4	B2A (XU52C/K)	**T496B**			
1.9	01.91 - 12.93	72	1905	4	DFZ (XU9J1)	**T905B**			year
1.9	10.90 - 12.93	80	1905	4	DDZ (XU9M)	**T905B**			
1.9 GTI	07.89 - 12.93	88	1905	4	DKZ (XU9JAZ)	**T905B**			
1.9 GTI 16V	10.90 - 12.93	108	1905	4	DFW (XU9J4Z)	**T598B**			
1.9 GTI 16V	08.89 - 07.90	116	1905	4	D6C (XU9J4)	**T598B**			
405 I (15B)									
1.6	07.87 - 12.92	53	1580	4	B1E (XU51C)	**T494B**			DIN
	07.87 - 12.92	53	1580	4	B1E (XU51C)	**T496B**			SAE
1.6	10.89 - 09.90	66	1580	4	BDZ (XU5M)	**T496B**			SAE
	09.90 - 12.92	66	1580	4	BDZ (XU5M)	**T497B**			PIN
1.6	07.87 - 06.88	55	1580	4	B1E (XU51C)/BAZ (XU5CP)	**T494B**			DIN
	07.87 - 06.88	55	1580	4	B1E (XU51C)/BAZ (XU5CP)	**T496B**			SAE
1.6	07.87 - 09.90	65	1580	4	BDY (XU5M2Z)/BDZ (XU5M)	**T496B**			SAE
	09.90 - 12.92	65	1580	4	BDY (XU5M2Z)/BDZ (XU5M)	**T497B**			PIN
1.6	01.87 - 12.92	69	1580	4	B2A (XU52C/K)	**T496B**			
1.9	07.87 - 12.92	70	1905	4	D2C (XU92C)	**T494B**			DIN
	07.87 - 12.92	70	1905	4	D2C (XU92C)	**T496B**			SAE
1.9	07.88 - 12.92	80	1905	4	DDZ (XU9M)	**T496B**			
1.9 4x4	07.88 - 12.92	80	1905	4	DDZ (XU9M)	**T496B**			
1.9 Injection	07.87 - 12.92	77	1905	4	DFZ (XU9J1)	**T494B**			
1.9 Sport MI-16	07.87 - 11.91	116	1905	4	D6C (XU9J4)	**T598B**			
1.9 Sport MI-16	04.88 - 12.92	108	1905	4	DFW (XU9J4Z)	**T598B**			
1.9 Sport MI-16 4x4	04.88 - 12.92	108	1905	4	DFW (XU9J4Z)	**T598B**			
405 I Break (15E)									
1.6	10.88 - 08.92	53	1580	4	B1E (XU51C)	**T494B**			DIN
	10.88 - 08.92	53	1580	4	B1E (XU51C)	**T496B**			SAE
1.6	10.88 - 08.92	55	1580	4	BAZ (XU5CP)	**T494B**			
1.6	10.88 - 08.92	66	1580	4	BDZ (XU5M)	**T496B**			SAE
	10.88 - 08.92	66	1580	4	BDZ (XU5M)	**T497B**			PIN
1.6	10.88 - 09.90	65	1580	4	BDY / BDZ (XU5M)	**T496B**			SAE
	09.90 - 08.92	65	1580	4	BDY / BDZ (XU5M)	**T497B**			PIN
1.9	10.88 - 08.92	70	1905	4	D2C (XU92C)	**T494B**			DIN
	10.88 - 08.92	70	1905	4	D2C (XU92C)	**T496B**			SAE
1.9	10.88 - 08.92	77	1905	4	DFZ (XU9J1)	**T494B**			
1.9	10.88 - 08.92	88	1905	4	DKZ (XU9JAZ)	**T496B**			
1.9	10.88 - 08.92	80	1905	4	DDZ (XU9M)	**T496B**			
1.9 4x4	10.88 - 08.92	80	1905	4	DDZ (XU9M)	**T496B**			
1.9 4x4	07.90 - 07.92	108	1905	4		**T598B**			
405 II (4B)									
1.4	08.92 - 10.95	55	1361	4	KDX (TU3MC)	**T815B**			
1.6	08.92 - 10.95	65	1580	4	BFZ / BDY /BDZ (XU5M)	**T497B**			

PEUGEOT 405 II (4B) ▶

model	year	kW	cm³	cyl	engine	I	II	III	info
405 II (4B)									
1.8	08.92 - 10.95	74	1762	4	LFZ (XU7JP)	**T497B**			
2.0	08.92 - 10.95	89	1998	4	RFX (XU10J2)	**T498B**			
2.0 16V	06.94 - 10.95	110	1998	4	RFT (XU10J4)	**T598B**			
2.0 MI-16	08.92 - 10.95	112	1998	4	RFY (XU10J4Z)	**T498B**			
2.0 X4	08.92 - 10.95	89	1998	4	RFX (XU10J2)	**T498B**			
405 II Break (4E)									
1.4	08.92 - 10.96	55	1361	4	KDX (TU3MC)	**T815B**			
1.6	08.92 - 10.96	65	1580	4	BFZ / BDY /BDZ (XU5M)	**T497B**			
1.8	08.92 - 10.96	74	1762	4	LFZ (XU7JP)	**T497B**			
2.0	08.92 - 10.96	89	1998	4	RFX (XU10J2)	**T498B**			
2.0 4x4	08.92 - 10.96	89	1998	4	RFX (XU10J2)	**T498B**			
406 (8B)									
1.6	11.95 - 05.04	65	1580	4	BFZ (XU5JP)	**T497B**			
1.8	05.97 - 05.04	66	1761	4	LFX (XU7JB)	**T497B**			
1.8 16V	11.95 - 03.99	81	1761	4	LFY (XU7JP4)	**T497B**			
2.0 16V	11.95 - 05.04	97	1998	4	RFV (XU10J4R)	**T498B**			
2.0 Turbo	04.96 - 05.04	108	1998	4	RGX (XU10J2TE)	**T498B**			
406 Break (8E/F)									
1.8	05.97 - 10.04	66	1761	4	LFX (XU7JB)	**T497B**			
1.8 16V	10.96 - 03.99	81	1761	4	LFY (XU7JP4)	**T497B**			
2.0 16V	10.96 - 03.97	97	1998	4	RFV (XU10J4R)	**T498B**			
2.0 Turbo	10.96 - 10.04	108	1998	4	RGX (XU10J2TE)	**T498B**			
406 Coupe (8C)									
2.0 16V	03.97 - 12.04	97	1998	4	RFV (XU10J4R)	**T498B**			
505									
2.2	03.86 - 12.93	84	2165	4	851X (ZDJL)	**T671B**			
2.2	05.81 - 10.84	85	2165	4	851 (ZDJ)	**T671B**			
2.2 GTI	08.83 - 12.93	90	2165	4	851B (ZDJL)	**T671B**			
2.2 GTI	08.83 - 12.93	96	2165	4		**T671B**			
2.8 GTI V6	06.86 - 12.93	105	2849	6	154X (ZN3J)	**T199B**			
605 (6B)									
2.0	02.90 - 09.99	79	1998	4		**T959B**			
2.0	06.89 - 09.99	84	1998	4	R5A (XU102C)	**T959B**			
2.0	06.89 - 09.90	89	1998	4	RFZ (XU10J2Z)	**T959B**			with distributor
	10.90 - 09.99	89	1998	4	RFZ (XU10J2Z)	**T498B**			without distributor
2.0 Turbo	07.92 - 09.99	104	1998	4	RGY (XU10J2TE)	**T498B**			
2.0 Turbo	07.91 - 09.99	108	1998	4	RGX (XU10J2TE)	**T498B**			
3.0	10.89 - 09.99	123	2963	6	UFZ (ZPJ)	**T817B**			
3.0 SV 24	08.89 - 09.99	147	2963	6	UKZ (ZPJ4/Z)	**T216B**			
806 (221)									
1.8	07.95 - 08.02	73	1761	4	LFW (XU7JP)	**T497B**			
2.0	06.94 - 08.02	89	1998	4	RFU (XU10J2)	**T498B**			
2.0 16V	05.98 - 09.00	97	1998	4	RFV (XU10J4R)	**T498B**			
2.0 Turbo	06.94 - 08.02	108	1998	4	RGX (XU10J2TE)	**T498B**			
Boxer Bus (230P)									
2.0 i	03.94 - 04.02	80	1998	4	RFW (XU10J2)	**T497B**			
2.0 i 4x4	08.96 - 04.02	80	1998	4	RFW (XU10J2)	**T497B**			
Boxer Bus (244, Z_)									
2.0	04.02 -	81	1998	4	RFL (XU10J2U)	**T497B**			
Boxer Flatbed (ZCT_)									
2.0	12.01 - 04.02	81	1998	4	RFL (XU10J2U)	**T497B**			
2.0 i	06.94 - 04.02	80	1998	4	RFW (XU10J2)	**T497B**			
Boxer Van (230L)									
2.0 4x4	03.96 - 09.98	80	1998	4	RFW (XU10J2)	**T497B**			
2.0 i	06.94 - 04.02	80	1998	4	RFW (XU10J2)	**T497B**			
Boxer Van (244)									
2.0	04.02 -	81	1998	4	RFL (XU10J2U)	**T497B**			
Expert (224)									
1.6	02.96 -	58	1581	4	222A2 (1580 SPI)	**T552C**	**T013B**		original / alternative
1.8	10.96 - 09.00	74	1761	4	LFZ (XU7JP)	**T497B**			
Expert Flatbed (223)									
1.6	02.96 -	58	1581	4	222A2 (1580 SPI)	**T552C**	**T013B**		original / alternative
Expert Van (222)									
1.6	02.96 -	58	1581	4	222A2 (1580 SPI)	**T552C**	**T013B**		original / alternative
1.8	10.96 - 09.00	74	1761	4	LFZ (XU7JP)	**T497B**			
Partner Combispace (5F)									
1.1	06.96 -	44	1124	4	HDZ (TU1M)/HFX (TU1JP)	**T815B**			
1.4	06.96 - 11.02	55	1360	4	KFX (TU3JP)	**T815B**			
1.8	05.97 -	66	1761	4	LFX (XU7JB)	**T497B**			

PEUGEOT Partner Van (5)

model	year	kW	cm³	cyl	engine	I	II	III	info
Partner Van (5)									
1.1	06.96 -	44	1124	4	HDZ (TU1M)	**T815B**			
1.4	06.96 -	55	1360	4	KFX (TU3JP)/TU32	**T815B**			
1.8	03.97 -	66	1761	4	LFX (XU7JB)	**T497B**			
PORSCHE									
944									
2.5	01.85 - 07.87	110	2479	4	M 44.08/_.02/_.07/M 44.04	**T349C**			
2.5	08.87 - 12.90	118	2479	4	M 44.05/M 44.09/M 44.10	**T349C**			
2.5	06.81 - 07.87	120	2479	4	M 44.03/_.05/_.01/M 44.06	**T349C**			
2.5 Turbo	08.85 - 07.88	162	2479	4	M 44.50/M 44.51	**T349C**			
2.5 Turbo	09.87 - 07.91	184	2479	4	M 44.52	**T349C**			
2.5 Turbo Cabrio	11.90 - 07.91	184	2479	4	M 44.52	**T349C**			
2.7	11.88 - 08.89	121	2681	4	M 44.12/M 44.11	**T349C**			
PROTON									
Gen 2 (CM_)									
1.3	06.04 -	70	1332	4	S4PE	**T969B**			
1.6	06.04 -	82	1597	4	S4PH	**T969B**			
Impian									
1.6	09.01 -	76	1584	4	4G 18P	**T533P**			semidirect
Wira									
1.3	08.00 -	55	1298	4	4 G13	**T969B**			
1.5	08.00 -	64	1468	4	4 G15	**T969B**			
Wira Hatchback									
1.3	08.00 -	55	1298	4	4 G13	**T969B**			
1.5	08.00 -	64	1468	4	4 G15M	**T969B**			
RENAULT									
4 (112_)									
0.8	10.62 - 09.83	19	845	4	800 705/800	**T668B**			
0.8	10.83 - 10.88	21	845	4	800 705/B1B 707	**T668B**			
0.8	09.71 - 12.88	25	845	4	800 01	**T668B**			
1.1	06.78 - 06.90	25	1108	4	688 712	**T668B**			
4 Van (R21_, R23_)									
0.8	09.66 - 12.88	25	845	4	800 01	**T668B**			
0.8	04.83 - 07.89	21	845	4	800 705/B1B 707	**T668B**			
1.1	10.76 - 07.89	25	1108	4	C1E 714/718/ 719	**T668B**			
5 (122_)									
0.8	01.82 - 12.84	27	845	4	800 710	**T908B**			
1.0	01.72 - 12.85	32	956	4	689 710	**T908B**			
1.3	09.76 - 09.79	31	1289	4	810 726	**T303B**			
1.3	06.79 - 09.84	33	1289	4	810 719	**T303B**			
1.3	09.75 - 09.84	47	1289	4	810 725	**T303B**			
1.3 Automatic	06.79 - 09.84	40	1289	4	810 729	**T303B**			
1.4	01.82 - 12.85	46	1397	4	847 725/C2J 713	**T303B**			
9 (L42_)									
1.1	09.81 - 05.87	35	1108	4	C1E 715/C1E 720	**T908B**			
1.2	09.85 - 12.88	40	1237	4	C1G 700/C1G 710	**T908B**			
1.4	12.81 - 12.88	44	1397	4	C1J 715/792/796/ C2J 730	**T908B**			
1.4	09.85 - 12.88	49	1397	4	C2J 766/720/768/767	**T304B**			
1.7	10.86 - 12.88	54	1721	4	F3N 718	**T840B**			
1.7	10.86 - 12.88	55	1721	4	F2N 730	**T840B**			
1.7	09.84 - 12.88	59	1721	4	F2N 704/F2N 700	**T840B**			
1.7	10.86 - 12.88	65	1721	4	F2N 798/F2N 710/F2N 708	**T840B**			
1.7	06.87 - 12.88	69	1721	4	F3N 708	**T840B**			
11 (B/C37_)									
1.1	03.83 - 06.86	35	1108	4	C1E 715/C1E 720	**T304B**			
1.2	10.84 - 12.88	40	1237	4	C1G 700/C1G 710	**T908B**			
1.4	03.83 - 12.88	44	1397	4	C1J 715/C2J 730	**T304B**			
1.4	03.83 - 12.88	49	1397	4	C2J 766/720/768/767	**T908B**			
1.4	03.83 - 12.85	50	1397	4	C2J 718	**T908B**			
1.4	05.83 - 12.85	53	1397	4	C2J 717/C2J 755	**T304B**			SAE
	05.83 - 12.85	53	1397	4	C2J 717	**T908B**			DIN
1.4 Turbo	04.84 - 12.86	77	1397	4	C1J 764/C1J 760	**T304B**			
1.4 Turbo	10.86 - 12.88	85	1397	4	C1J 770/C1J 782	**T304B**			
1.7	10.86 - 12.88	54	1721	4	F2N 730	**T840B**			
1.7	10.84 - 12.88	55	1721	4	F3N 718	**T840B**			
1.7	10.83 - 12.87	59	1721	4	F2N 704/F2N 700	**T840B**			
1.7	06.87 - 12.88	64	1721	4	F2N 732/F2N 742	**T840B**			
1.7	10.86 - 12.88	65	1721	4	F2N 798/F2N 710/F2N 708	**T840B**			

RENAULT 18 (134_), 18 Variable (135_) ▶

model	year	kW	cm³	cyl	engine	I	II	III	info
18 (134_), 18 Variable (135_)									
1.4	04.78 - 07.86	47	1397	4	847 720/847 722	**T908B**			
19 I (B/C53_)									
1.2	01.88 - 12.92	40	1237	4	C1G 730	**T304B**			DIN
	01.88 - 12.92	40	1237	4	C1G 730	**T321B**			SAE
1.4	01.89 - 12.89	43	1397	4	C2J 772	**T304B**			
1.4	01.88 - 12.92	59	1390	4	E6J 701	**T321B**			
1.4 cat	01.89 - 04.92	43	1397	4	C3J 710	**T304B**			
1.7	09.88 - 04.92	54	1721	4	F3N 741/F3N 740	**T705B**			
1.7	09.88 - 04.92	66	1721	4	F3N 743/F3N 742	**T705B**			
1.7	06.89 - 04.92	79	1721	4	F3N 746	**T858B**			
1.8 16V	06.89 - 04.92	99	1764	4	F7P 704	**T900B**			
19 I Cabriolet (D53_)									
1.7	07.91 - 04.92	70	1721	4	F3N 743/F3N 742	**T705B**			
1.8 16V	07.91 - 04.92	101	1764	4	F7P 704	**T900B**			
19 I Chamade (L53_)									
1.2	01.88 - 12.92	40	1237	4	C1G 730	**T304B**			DIN
	01.88 - 12.92	40	1237	4	C1G 730	**T321B**			SAE
1.4	07.88 - 04.92	43	1397	4	C3J 710/C2J 772	**T304B**			
1.4	07.88 - 08.90	57	1390	4	E6J 701	**T321B**			
1.7	10.89 - 04.92	54	1721	4	F3N 741/F3N 740	**T705B**			
1.7	07.88 - 04.92	66	1721	4	F3N 743/F3N 742	**T705B**			
1.7	09.88 - 12.92	68	1721	4	F2N 720/F2N 721	**T705B**			
1.7	08.88 - 12.92	79	1721	4	F3N 746	**T858B**			
1.8 16V	10.89 - 04.92	99	1764	4	F7P 704	**T900B**			
19 I Van (S53_)									
1.2	01.88 - 12.92	40	1237	4	C1G 730	**T304B**			DIN
	01.88 - 12.92	40	1237	4	C1G 730	**T321B**			SAE
19 II (B/C53_)									
1.2	04.92 - 12.95	40	1237	4	C1G 730	**T321B**			
1.4	04.92 - 12.95	43	1397	4	C3J 710	**T304B**			
1.4	01.92 - 12.95	55	1390	4	E7J 742	**T321B**			
1.4	01.92 - 12.95	59	1390	4	E7J 706/E6J 700	**T321B**			
1.7	04.92 - 12.95	54	1721	4	F3N 741/F3N 740	**T840B**			
1.7	04.92 - 12.95	66	1721	4	F3N 743	**T858B**			
1.8	04.92 - 12.95	65	1794	4	F3P 706/707/760/708	**T541B**			
1.8	04.92 - 12.95	66	1794	4	F3P 706/F3P 760	**T541B**			
1.8	05.94 - 12.95	79	1794	4	F3P 765/F3P 682	**T541B**	**T669B**		boot design
1.8	04.92 - 05.94	81	1794	4	F3P 700	**T669B**			
1.8 16V	04.92 - 12.95	99	1764	4	F7P 704	**T900B**			
19 II Cabriolet (D53_, 853_)									
1.7	04.92 - 09.93	66	1721	4	F3N 743	**T858B**			
1.8	04.92 - 06.96	65	1794	4	F3P 704/706/ 707/760/708	**T541B**			
1.8	09.93 - 06.96	66	1794	4	F3P 706/F3P 760	**T541B**			
1.8	07.94 - 12.95	79	1794	4	F3P 765/F3P 682/F3P 764	**T669B**			
	12.95 - 06.96	79	1794	4	F3P 765/F3P 682/F3P 764	**T541B**			
1.8 16V	04.92 - 06.96	99	1764	4	F7P 704	**T900B**			
19 II Chamade (L53_)									
1.4	04.92 - 12.95	43	1397	4	C3J 710	**T304B**			
1.4	11.93 - 12.95	55	1390	4	E7J 742	**T321B**			
1.4	10.94 - 11.95	57	1390	4	E6J 700	**T321B**			
1.4	10.94 - 11.95	59	1390	4	E7J 706	**T321B**			
1.7	04.92 - 12.95	54	1721	4	F3N 741/F3N 740	**T840B**			
1.7	05.92 - 11.95	55	1721	4	F3N 741/F3N 740	**T609B**			
1.7	04.92 - 12.95	66	1721	4	F3N 743	**T858B**			
1.7	01.93 - 08.95	68	1721	4	F2N 720/F2N 721	**T705B**			
1.8	04.92 - 12.95	65	1794	4	F3P 704/706/ 707/760/708	**T541B**			
1.8	04.92 - 12.95	66	1794	4	F3P 706/F3P 760	**T541B**			
1.8	05.92 - 09.94	67	1794	4	F3P 765	**T669B**			
1.8	05.92 - 11.95	79	1794	4	F3P 706/F3P 700	**T669B**			
1.8	05.94 - 12.95	79	1783	4	F3P 682	**T541B**	**T669B**		boot design
1.8	04.92 - 05.94	81	1794	4	F3P 700	**T669B**			
1.8 16V	04.92 - 12.95	99	1764	4	F7P 704	**T900B**			
19 II Van (S53_)									
1.2	03.92 - 12.95	40	1237	4	C1G 730	**T321B**			
21 (B48_)									
1.7	09.89 - 10.92	54	1721	4	F3N 726	**T311B**			
1.7	07.89 - 05.93	55	1721	4	F2N 712/F3N 726	**T311B**			
1.7	09.89 - 06.94	66	1721	4	F3N 723/F3N 722	**T311B**			
2.0	06.91 - 05.93	75	1995	4	J6R 793/759/758/792	**T786B**			
2.0	02.90 - 10.92	99	1995	4	J7R 740	**T792B**			

RENAULT 21 (B48_) ▶

model	year	kW	cm³	cyl	engine	I	II	III	info
21 (B48_)									
2.0 4x4	09.90 - 10.92	99	1995	4	J7R 740	**T792B**			
2.2	09.89 - 06.94	79	2165	4	J7T 754/J7T 755	**T786B**			
2.2 4x4	07.90 - 06.94	79	2165	4	J7T 754/J7T 755	**T786B**			
21 Combi (K48_)									
1.7	06.86 - 12.89	54	1721	4	F2N 750	**T311B**			
1.7	06.86 - 03.93	55	1721	4	F2N 712	**T311B**			
1.7	06.87 - 04.89	64	1721	4	F2N 752	**T705B**			
1.7	10.86 - 12.88	65	1721	4	F2N 710	**T705B**			
1.7	10.89 - 12.93	66	1721	4	F3N 723/F3N 722	**T311B**			
1.7 cat	05.88 - 06.93	54	1721	4	F3N 726	**T311B**			
2.0	06.91 - 05.93	75	1995	4	J6R 759/J6R 758/J6R 792	**T786B**			
2.0	06.86 - 12.88	85	1995	4	J7R 750/J7R 751	**T707B**			
2.0	03.86 - 12.93	88	1995	4	J7R 747/J7R 746	**T786B**			
2.0	06.90 - 02.94	99	1995	4	J7R 740	**T792B**			
2.0 4x4	03.89 - 12.93	88	1995	4	J7R 747/J7R 746	**T786B**			
2.2	06.86 - 11.93	79	2165	4	J7T 754/J7T 755	**T786B**			
2.2 4x4	06.86 - 12.93	79	2165	4	J7T 754/J7T 755	**T786B**			
21 Sedan (L48_)									
1.7	07.86 - 02.94	54	1721	4	F3N 726 /F2N 750	**T311B**			
1.7	03.86 - 12.87	55	1721	4	F2N 712	**T311B**			
1.7	06.87 - 04.89	64	1721	4	F2N 752	**T705B**			
1.7	03.86 - 03.93	65	1721	4	F2N 710	**T705B**			
1.7	09.89 - 02.94	66	1721	4	F3N 723/F3N 722	**T705B**			
1.7	03.86 - 02.94	69	1721	4	F3N 723/F3N 722	**T705B**			
2.0	03.86 - 10.93	75	1995	4	J6R 759/J6R 758	**T786B**			
2.0	05.91 - 10.93	78	1995	4	J6R 758	**T707B**			
2.0	03.86 - 12.88	85	1995	4	J7R 750/J7R 751	**T707B**			
2.0	03.86 - 12.93	88	1995	4	J7R 747/J7R 746	**T786B**			
2.0	02.90 - 06.94	99	1995	4	J7R 740	**T792B**			
2.0 4x4	12.89 - 02.94	99	1995	4	J7R 740	**T792B**			
2.0 Turbo	04.87 - 03.90	129	1995	4	J7R 752	**T792B**			
2.0 Turbo 4x4	08.89 - 10.93	129	1995	4	J7R 752	**T792B**			
2.0 Turbo 4x4	02.90 - 10.92	119	1995	4	J7R 756	**T792B**			
2.2	07.86 - 02.94	79	2165	4	J7T 754/J7T 755	**T786B**			
2.2 4x4	07.90 - 02.94	79	2165	4	J7T 754/J7T 755	**T786B**			
25 (B29_)									
2.0	04.84 - 12.92	74	1995	4	J6R 763/707/760/706/762	**T707B**			
2.0	03.87 - 12.93	88	1995	4	J7R 723/J7R 722	**T786B**			
2.0 12V	06.89 - 12.92	99	1995	4	J7R 726	**T792B**			
2.0 12V	06.88 - 12.93	103	1995	4	J7R 721/J7R 720	**T792B**			
2.2	11.85 - 03.89	76	2165	4		**T786B**			
2.2	09.86 - 12.92	79	2165	4	J7T 708/J7T 733 /J7T 732	**T786B**			
2.2	04.84 - 12.89	89	2165	4	J7T 715	**T786B**			
2.2	04.84 - 12.89	91	2165	4	J7T 730/J7T 731	**T786B**			
2.8 V6	06.87 - 02.90	115	2849	6	Z7W 700	**T160B**			
2.8 V6	06.87 - 12.92	110	2849	6	Z7W 706/Z7W 707/Z7W 709	**T160B**			
Clio I (B/C57_, 5/357_)									
1.1	01.91 - 09.98	34	1108	4	C1E 700	**T908B**			
1.2	01.91 - 01.96	40	1171	4	E7F 706	**T321B**			
1.2	01.96 - 09.98	40	1149	4	D7F 730	**T767B**			
1.2	01.96 - 12.96	40	1239	4	C3G 720	**T606B**			
1.2	05.90 - 09.98	43	1171	4	E7F 750	**T321B**			
1.2	01.96 - 09.98	43	1149	4	D7F 730	**T767B**			
1.2	05.90 - 03.96	44	1171	4	E5F 710	**T321B**			
1.4	01.91 - 09.98	55	1390	4	E7J 756/E7J 757	**T321B**			
1.4	01.91 - 09.98	58	1390	4	E7J 719/E7J 718	**T321B**			
1.4	01.91 - 09.98	59	1390	4	E7J 711	**T321B**			
1.8	01.91 - 12.95	65	1794	4	F3P 710 /F3P 714	**T669B**			
	12.95 - 09.98	65	1794	4	F3P 710 /F3P 714	**T541B**			
1.8	08.90 - 04.96	66	1783	4	F3P 755	**T669B**			
1.8	08.94 - 09.98	66	1794	4	F3P 755 /F3P 754	**T541B**			
	08.94 - 09.98	66	1794	4	F3P 755 /F3P 754	**T670B**			Mot. No. -221295
	08.94 - 09.98	66	1794	4	F3P 755 /F3P 754	**T840B**			Mot. No. 221296-
1.8 16V	01.91 - 03.96	99	1764	4	F7P 722	**T900B**			
1.8 RSi	01.93 - 08.95	80	1794	4	F3P 712	**T669B**			
1.8 RSi	08.95 - 12.95	79	1783	4	F3P 758	**T669B**			
	12.95 - 09.98	79	1783	4	F3P 758	**T541B**			
2.0 Williams	01.94 - 09.98	108	1998	4	F7R 700	**T900B**			
Clio I Van (S57_)									
1.1	01.91 - 09.98	34	1108	4	C1E 700	**T908B**			

RENAULT Clio I Van (S57_) ▶

model	year	kW	cm³	cyl	engine	I	II	III	info
Clio I Van (S57_)									
1.2	01.91 - 09.98	40	1171	4	E7F 706	**T321B**			
1.2	01.91 - 09.98	44	1171	4	E7F 750	**T321B**			
Clio II (BB0/1/2_, CB0/1/2_)									
1.2	09.98 - 10.99	43	1149	4	D7F 766/720/764/726/746	**T767B**			
	10.99 -	43	1149	4	D7F 766/720/764/726/746	**T319B**			
1.2	03.99 - 05.01	44	1149	4	D7F 722	**T319B**			
1.2	06.01 - 10.03	55	1149	4		**T319B**			
1.2 16V	06.01 -	55	1149	4	D4F 728/714/706/712/722	**T495B**			
1.4	09.98 - 05.05	55	1390	4	E7J 780	**T841B**			
1.6	09.98 - 05.05	66	1598	4	K7M 744/K7M 745	**T841B**			
2.0 16V Sport	02.00 -	124	1998	4	F4R 730	**T383B**			
2.0 16V Sport	01.04 -	132	1998	4	F4R 738	**T383B**			
Clio II Van (SB0/1/2_)									
1.2	09.98 - 10.99	43	1149	4	D7F 720/D7F 726/D7F 746	**T767B**			
	10.99 -	43	1149	4	D7F 720/D7F 726/D7F 746	**T319B**			
1.2	03.99 - 10.03	44	1149	4	D7F 722/D7F 726/D7F 746	**T319B**			
Clio III (BR0/1, CR0/1)									
1.2 16V	06.05 -	48	1149	4	D4F 740	**T495B**			
1.2 16V	06.05 -	55	1149	4	D4F 740	**T495B**			
1.2 16V	06.05 -	58	1149	4	D4F 764	**T495B**			
1.2 16V	05.07 -	74	1149	4	D4F 784	**T495B**			
1.2 16V	09.10 -	76	1149	4	D4F 786	**T495B**			
1.2 16V Hi-Flex	07.08 -	55	1149	4	D4F 740/D4F 742	**T495B**			
Clio Grandtour (KR0/1_)									
1.2 16V	02.08 -	55	1149	4	D4F 740	**T495B**			
1.2 16V	02.08 -	58	1149	4	D4F 764	**T495B**			
1.2 16V	02.08 -	74	1149	4	D4F 784	**T317B**			
1.2 16V Hi-Flex	07.08 -	55	1149	4	D4F 740	**T495B**			
Clio Grandtour IV									
1.2 16V	01.13 -	54	1149	4	D4F 740	**T495B**			
Espace I (J11_)									
2.0	01.88 - 12.90	74	1995	4	J6R 734	**T707B**			
2.0	07.84 - 12.90	80	1995	4	J6R 234/J6R 236	**T707B**			
2.0 i	01.89 - 12.90	87	1995	4	J7R 760	**T707B**			
2.0 i Quadra	03.88 - 12.92	87	1995	4	J7R 760	**T707B**			
2.2	07.86 - 12.90	79	2165	4	J7T 770	**T707B**			
2.2 Quadra	01.88 - 12.90	79	2165	4	J7T 770	**T707B**			
Espace II (J/S63_)									
2.0	01.91 - 10.96	76	1995	4	J7R 768	**T707B**			
2.2	01.91 - 10.96	79	2165	4	J7T 772/J7T 776/J7T 773	**T707B**			
2.2 4x4	03.91 - 12.96	79	2165	4	J7T 772/J7T 773	**T707B**			
2.8 V6	01.91 - 10.96	110	2849	6	Z7W 717/Z7W 712/Z7W 713	**T160B**			
Espace III (JE0_)									
2.0	11.96 - 04.97	84	1998	4	F3R 769/F3R 728/F3R 768	**T709B**			SAE
	04.97 - 10.00	84	1998	4	F3R 769/F3R 728/F3R 768	**T960B**			PIN
3.0	11.96 - 10.98	123	2963	6	Z7X 775	**T159B**			
Fuego (136_)									
1.6 TS/GTS	10.80 - 10.85	71	1647	4	843 723/724 /A6M 725/726/	**T908B**			
Kangoo (KC0/1_)									
1.2	08.97 - 10.99	43	1149	4	D7F 710/744/722/720/726	**T767B**			
	10.99 -	43	1149	4	D7F 710/744/722/720/726	**T319B**			
1.2 16V	06.01 -	55	1149	4	D4F 714/D4F 716/D4F 712	**T495B**			
1.4	08.97 -	55	1390	4	E7J 634/635/780/K7J 701/700	**T949B**			
Kangoo Express (FC0/1_)									
1.2	08.97 - 10.99	43	1149	4	D7F 710/744/722/720/726	**T767B**			
	10.99 -	43	1149	4	D7F 710/744/722/720/726	**T319B**			
1.2	07.98 - 07.01	44	1149	4	D7F 766/D7F 764	**T767B**			
1.2 16V	10.01 -	55	1149	4	D4F 714/D4F 712/D4F 730	**T495B**			
1.4	08.97 -	55	1390	4	E7J 634/635/780/K7J 701	**T949B**			
Kangoo Express (FW0/1_)									
1.6	02.08 -	64	1598	4	K7M 750	**T921B**			
Kangoo / Grand Kangoo (KW0/1_)									
1.6	02.08 -	64	1598	4	K7M 750	**T921B**			
Laguna I (B56_, 556_)									
1.6 16V	11.97 - 03.99	79	1598	4	K4M 720	**T949B**			
1.8	11.93 - 03.01	66	1794	4	F3P 720	**T670B**	**T840B**		boot design
1.8	08.95 - 03.01	66	1783	4	F3P 678	**T840B**			
	08.95 - 04.97	66	1783	4	F3P 670	**T709B**			SAE
	04.97 - 03.01	66	1783	4	F3P 670	**T960B**			PIN
1.8	08.95 - 03.01	69	1794	4	F3P 720/F3P 724	**T670B**			

RENAULT Laguna I (B56_, 556_)

model	year	kW	cm³	cyl	engine	I	II	III	info
Laguna I (B56_, 556_)									
1.8	06.95 - 04.97	69	1783	4	F3P 674	**T709B**			SAE
	04.97 - 02.01	69	1783	4	F3P 674	**T960B**			PIN
2.0	03.99 - 03.01	80	1998	4	F3R 611	**T709B**			
2.0	11.93 - 05.95	83	1998	4	F3R 722/F3R 723	**T670B**			
	05.95 - 03.01	83	1998	4	F3R 722/F3R 723	**T840B**			
2.0	06.95 - 04.97	84	1998	4	F3R 768	**T709B**			SAE
	04.97 - 02.01	84	1998	4	F3R 768	**T960B**			PIN
2.0	06.95 - 02.01	103	1948	4	N7Q 700/N7Q 704	**T917B**			
2.0 16V	06.95 - 03.01	102	1948	4	N7Q 700/N7Q 704	**T917B**			
3.0	11.93 - 03.01	123	2963	6	Z7X 765/Z7X 760	**T159B**			
Laguna I Grandtour (K56_)									
1.6 16V	11.97 - 03.99	79	1598	4	K4M 720	**T949B**			
1.8	09.95 - 03.01	66	1783	4	F3P 678	**T840B**			
	09.95 - 04.97	66	1783	4	F3P 670	**T709B**			SAE
	04.97 - 03.01	66	1783	4	F3P 670	**T960B**			PIN
1.8	09.95 - 03.01	69	1794	4	F3P 720/F3P 724	**T670B**	**T840B**		boot design
2.0	09.95 - 03.01	83	1998	4	F3R 722/F3R 723	**T670B**	**T840B**		boot design
2.0 16V	09.95 - 03.01	102	1948	4	N7Q 700/N7Q 704	**T917B**			
3.0	02.96 - 03.01	123	2963	6	Z7X 765	**T159B**			
Laguna II (BG0/1_), Laguna II Grandtour (KG0/1_)									
2.0 16V IDE (BG0N)	04.01 -	103	1998	4	F5R 701/F5R 700	**T316B**			
Logan (LS_)									
1.4	09.04 -	55	1390	4	K7J 710	**T930B**	**T910H**		
1.6	09.04 -	64	1598	4	K7M 710	**T930B**	**T910H**		
Logan Combi (KS_)									
1.4	10.07 -	55	1390	4	K7J 710	**T930B**	**T910H**		
1.6	04.07 -	64	1598	4	K7M 710	**T930B**	**T910H**		
Master I Bus (T__)									
2.0	10.86 - 07.98	58	1995	4	J5R 718	**T318B**			
2.0	08.80 - 09.86	59	1995	4	829 731	**T318B**			
2.2	08.80 - 07.98	67	2165	4	J7T 782 /J7T 788	**T318B**			
Master I Flatbed (P__)									
2.0	10.86 - 07.98	58	1995	4	J5R 728	**T318B**			
2.0	07.80 - 06.85	59	1995	4	829 731	**T318B**			
2.0	11.89 - 07.93	60	1995	4	J5R 718	**T318B**			
Master I Van (T__)									
2.0	10.86 - 07.98	58	1995	4	J5R 718	**T318B**			
2.0	08.80 - 10.86	59	1995	4	829 731	**T318B**			
2.2	08.80 - 07.98	67	2165	4	J7T 782 /J7T 788	**T318B**			
Megane I (BA0/1_)									
1.4 e	01.96 - 02.99	55	1390	4	E7J 764	**T321B**			SAE
	02.99 - 08.03	55	1390	4	E7J 626	**T949B**			PIN
1.4 Eco	01.96 - 03.99	52	1390	4	E7J 624	**T321B**			
1.6 e	09.96 - 03.97	66	1598	4	K7M 702/K7M 703/K7M 790	**T708B**			
	03.97 - 07.98	66	1598	4	K7M 702/K7M 703/K7M 790	**T949B**			
	07.98 - 03.99	66	1598	4	K7M 702/K7M 703/K7M 790	**T841B**			
1.6 i	09.96 - 03.97	55	1598	4	K7M 720	**T708B**			
	03.97 - 07.98	55	1598	4	K7M 720	**T949B**			
	07.98 - 03.99	55	1598	4	K7M 720	**T841B**			
2.0 16V	07.96 - 08.03	108	1998	4	F7R 710/F7R 714	**T316B**			
2.0 i	03.99 - 08.03	80	1998	4	F3R 751/F3R 750	**T709B**			SAE
	03.99 - 08.03	80	1998	4	F3R 751/F3R 750	**T960B**			PIN
2.0 i	01.96 - 08.03	84	1998	4	F3R 751/F3R 750	**T709B**			SAE
	01.96 - 08.03	84	1998	4	F3R 751/F3R 750	**T960B**			PIN
Megane I Cabriolet (EA0/1_)									
1.6 e	10.96 - 03.97	66	1598	4	K7M 702/K7M 703	**T708B**			
	04.97 - 07.98	66	1598	4	K7M 702/K7M 703	**T949B**			
	07.98 - 03.99	66	1598	4	K7M 702/K7M 703	**T841B**			
2.0	04.97 - 08.03	84	1998	4	F3R 750	**T709B**			SAE
	04.97 - 08.03	84	1998	4	F3R 750	**T960B**			PIN
2.0 16V	10.96 - 11.99	108	1998	4	F7R 710/F7R 714	**T316B**			
2.0 16V IDE	11.99 - 08.03	103	1998	4	F5R 740	**T316B**			
2.0 i	03.99 - 08.03	80	1998	4	F3R 791/F3R 796	**T709B**			SAE
	03.99 - 08.03	80	1998	4	F3R 791/F3R 796	**T960B**			PIN
Megane I Classic (LA0/1_)									
1.4	09.96 - 02.99	55	1390	4	E7J 764	**T321B**			SAE
	02.99 - 08.03	55	1390	4	E7J 626	**T949B**			PIN
1.6 e	09.96 - 03.97	66	1598	4	K7M 702/K7M 703/K7M 790	**T708B**			
	03.97 - 07.98	66	1598	4	K7M 702/K7M 703/K7M 790	**T949B**			
	07.98 - 03.99	66	1598	4	K7M 702/K7M 703/K7M 790	**T841B**			

RENAULT Megane I Classic (LA0/1_)

model	year	kW	cm³	cyl	engine	I	II	III	info
Megane I Classic (LA0/1_)									
1.6 i	09.96 - 03.97	55	1598	4	K7M 720	**T708B**			
	07.98 - 03.99	55	1598	4	K7M 720	**T841B**			
	03.97 - 07.98	55	1598	4	K7M 720	**T949B**			
2.0 i	03.99 - 08.03	80	1998	4	F3R 791/751/797/798/796	**T709B**			SAE
	03.99 - 08.03	80	1998	4	F3R 791/751/797/798/796	**T960B**			PIN
2.0 i	09.96 - 04.97	84	1998	4	F3R 791/751/797/798/796	**T709B**			SAE
	04.97 - 08.03	84	1998	4	F3R 791/751/797/798/796	**T960B**			PIN
Megane I Coach (DA0/1_)									
1.6 e	03.96 - 03.97	66	1598	4	K7M 702/K7M 703	**T708B**			
	03.97 - 07.98	66	1598	4	K7M 702/K7M 703	**T949B**			
	07.98 - 03.99	66	1598	4	K7M 702/K7M 703	**T841B**			
2.0 16V	03.96 - 11.99	108	1998	4	F7R 710/F7R 714	**T316B**			
2.0 16V IDE	11.99 - 08.03	103	1998	4	F5R 740	**T316B**			
2.0 i	03.99 - 08.03	80	1998	4	F3R 791/F3R 796	**T709B**			SAE
	03.99 - 08.03	80	1998	4	F3R 791/F3R 796	**T960B**			PIN
2.0 i	03.96 - 04.97	84	1998	4	F3R 751/F3R 750	**T709B**			SAE
	04.97 - 08.03	84	1998	4	F3R 751/F3R 750	**T960B**			PIN
Megane I Grandtour (KA0/1_)									
1.4 e	03.99 - 08.03	55	1390	4	E7J 626	**T949B**			
1.6 e	03.99 - 08.03	66	1598	4	K7M 702/K7M 703	**T708B**			SAE
	03.99 - 08.03	66	1598	4	K7M 702/K7M 703	**T949B**			PIN
Megane Scenic (JA0/1_)									
1.4 i	01.97 - 09.99	55	1390	4	E7J 764	**T321B**			
1.6 e	01.97 - 03.97	66	1598	4	K7M 702/K7M 703	**T708B**			
	04.97 - 07.98	66	1598	4	K7M 702/K7M 703	**T949B**			
	07.98 - 09.99	66	1598	4	K7M 702/K7M 703	**T841B**			
1.6 i	01.97 - 03.97	55	1598	4	K7M 720	**T708B**			
	04.97 - 07.98	55	1598	4	K7M 720	**T949B**			
	07.98 - 09.99	55	1598	4	K7M 720	**T841B**			
2.0 i	01.99 - 09.99	80	1998	4	F3R 796	**T709B**			SAE
	01.99 - 09.99	80	1998	4	F3R 796	**T960B**			PIN
2.0 i	01.97 - 04.97	84	1998	4	F3R 751/F3R 750	**T709B**			SAE
	04.97 - 09.99	84	1998	4	F3R 751/F3R 750	**T960B**			PIN
2.0 RXE 4x4	05.97 - 10.99	84	1998	4	F3R 750	**T709B**			SAE
	05.97 - 10.99	84	1998	4	F3R 750	**T960B**			PIN
Modus / Grand Modus (F/JP0_)									
1.2	12.04 -	55	1149	4	D4F 740	**T495B**			
1.2	12.04 -	58	1149	4	D4F 764	**T495B**			
1.2 16V Hi-Flex	10.08 -	55	1149	4	D4F 740	**T495B**			
1.2 16V	05.07 -	74	1149	4	D4F 784	**T317B**			
1.2 16V	04.11 -	76	1149	4	D4F 786	**T317B**			
Rapid Van (F40_, G40_)									
1.0	02.86 - 05.92	27	949	4	C1C 706	**T908B**			
1.1	07.85 - 04.95	33	1108	4	C1E 752/762/750/754/760	**T908B**			
1.2	09.91 - 03.98	40	1239	4	C3G 712/C3G 710	**T304B**			
1.4	07.85 - 08.91	43	1397	4	C1J 780/C1J 768	**T304B**			
1.4	03.86 - 08.91	44	1397	4	C2J 784	**T304B**			
1.4	09.91 - 03.98	55	1390	4	E7J 720/E7J 724	**T321B**			
1.4	01.94 - 03.98	58	1390	4	E7J 728	**T321B**			
1.4 cat	08.88 - 03.98	43	1397	4	C3J 762/700/702/760	**T304B**			
Safrane I (B54_)									
2.0	11.92 - 07.96	77	1995	4	J7R 732/J7R 733	**T909B**			
2.0 12V	04.92 - 07.96	97	1995	4	J7R 735/J7R 734	**T909B**			
2.2	04.92 - 07.96	79	2165	4	J7T 762	**T217B**			12V (12 valves)
	04.92 - 07.96	79	2165	4	J7T 762	**T909B**			8V (8 valves)
2.2	04.92 - 07.96	101	2165	4	J7T 760/J7T 761	**T217B**			12V (12 valves)
	04.92 - 07.96	101	2165	4	J7T 760/J7T 761	**T909B**			8V (8 valves)
3.0 V6	12.92 - 07.96	123	2963	6	Z7X 721/723/753/722	**T706B**			
3.0 V6 4x4	12.92 - 07.96	123	2963	6	Z7X 721/Z7X 723/Z7X 722	**T706B**			
3.0 Biturbo 4x4	02.93 - 07.96	193	2963	6	Z7X 726	**T706B**			
Safrane II (B54_)									
2.0 16V	07.96 - 12.00	100	1948	4	N7Q 710/N7Q 711	**T917B**			
2.5 20V	07.96 - 12.00	121	2435	5	N7U 700/N7U 701	**T916B**			
3.0 V6	07.96 - 12.00	123	2963	6	Z7X 755	**T706B**			
Sandero/Stepway I									
1.4	02.09 -	55	1390	4	K7J 710	**T930B**	**T910H**		
1.6	11.10 -	62	1598	4	K7M 718	**T930B**	**T910H**		
1.6	02.09 -	64	1598	4	K7M 710	**T930B**	**T910H**		
1.6	12.07 -	75	1598	4	K7M 710	**T930B**	**T910H**		

RENAULT Super 5 (B/C40_)

model	year	kW	cm³	cyl	engine	I	II	III	info
Super 5 (B/C40_)									
1.0	10.84 - 10.88	30	956	4	C1C 700	**T908B**			
1.1	10.84 - 10.88	34	1108	4	C1E 752/C1E 750/C1E 754	**T908B**			
1.1	01.86 - 03.95	33	1108	4	C1E 752/750/756/760	**T908B**			
1.2	01.87 - 08.90	40	1237	4	C1G 722/C1G 702/C1G 720	**T908B**			
1.4	10.84 - 06.88	43	1397	4	C1J 780/C1J 768	**T304B**			
1.4	06.87 - 08.90	44	1397	4	C2J 784	**T304B**			
1.4	06.87 - 07.89	49	1397	4	C2J 782	**T304B**			
1.4	10.84 - 07.89	52	1397	4	C2J 789/700/780/781/788	**T304B**			
1.4 cat	10.85 - 12.96	43	1397	4	C3J 700/C3J 702/C3J 760	**T304B**			
1.4 Turbo	08.85 - 06.89	85	1397	4	C1J 788	**T304B**			
1.4 Turbo	04.85 - 08.90	88	1397	4	C1J 784/C1J 782/C1J 788	**T304B**			
1.7	10.86 - 03.95	54	1721	4	F3N 716 /F3N 717	**T705B**			
1.7	06.87 - 03.95	64	1721	4	F2N 742/F2N 740	**T311B**			
1.7 i	10.86 - 08.91	69	1721	4	F3N 722/F3N 702	**T705B**			
Super 5 Van (S40_)									
1.1	10.84 - 12.96	34	1108	4	C1E 752/C1E 750/C1E 754	**T908B**			
1.2	01.87 - 12.96	44	1237	4	C1G 702	**T908B**			
1.4	09.85 - 07.86	44	1397	4	C3J 700	**T304B**			
Symbol									
1.4	08.00 -	55	1390	4	K7J 700	**T921B**			
Thalia (LB0/1/2_)									
1.4	08.00 -	55	1390	4	K7J 700	**T921B**			
Trafic Bus (T5, T6, T7)									
1.4	03.80 - 04.89	35	1397	4	C1J 700	**T908B**			
1.7	06.86 - 04.89	50	1721	4	F1N 724	**T320B**			
2.0	07.80 - 04.85	58	1995	4	829 720	**T577B**			
2.0	06.86 - 04.89	59	1995	4	J5R 722/J5R 716/J5R 726	**T577B**			
2.0 4x4	06.86 - 04.89	59	1995	4	J5R 722/J5R 716/J5R 726	**T577B**			
Trafic Bus (TXW)									
1.7	08.92 - 08.94	50	1721	4	F1N 724	**T320B**			
2.0	05.89 - 08.90	59	1995	4	J5R 726	**T577B**			
2.2	05.89 - 06.94	70	2165	4	J7T 780	**T787B**			
2.2	06.94 - 10.97	74	2165	4	J7T 600	**T787B**			
2.2 4x4	05.89 - 06.94	70	2165	4	J7T 780	**T787B**			
2.2 4x4	06.94 - 10.97	74	2165	4	J7T 600	**T787B**			
Trafic Flatbed (P6)									
1.4	03.80 - 04.89	35	1397	4	C1J 700	**T908B**			
1.7	06.86 - 04.89	50	1721	4	F1N 722	**T320B**			
2.0	03.80 - 04.89	59	1995	4	J5R 726	**T577B**			
Trafic Flatbed (PXX)									
1.7	05.89 - 08.94	50	1721	4	F1N 722	**T320B**			
2.0 RWD	05.89 - 10.97	59	1995	4	J5R 726	**T577B**			
2.2	05.89 - 06.94	70	2165	4	J7T 780	**T787B**			
2.2	09.94 - 04.98	74	2165	4	J7T 600	**T787B**			
2.2 4x4	09.94 - 04.98	74	2165	4	J7T 600	**T787B**			
Trafic Van (T1, T3, T4)									
1.4	03.80 - 04.89	35	1397	4	C1J 700	**T908B**			
1.7	06.86 - 04.89	50	1721	4	F1N 724	**T320B**			
2.0	06.86 - 04.89	59	1995	4	J5R 722/J5R 716/J5R 726	**T577B**			
2.0	07.80 - 04.85	58	1995	4	829 720	**T577B**			
2.0 4x4	06.86 - 04.89	59	1995	4	J5R 722/J5R 716/J5R 726	**T577B**			
Trafic Van (TXX)									
1.4	05.89 - 06.91	35	1397	4	C1J 700	**T908B**			
1.7	08.92 - 08.94	50	1721	4	F1N 720	**T320B**			
2.0	05.89 - 08.90	59	1995	4	J5R 716	**T577B**			
2.2	05.89 - 06.94	70	2165	4	J7T 780	**T787B**			
2.2	06.94 - 10.97	74	2165	4	J7T 600	**T787B**			
2.2 4x4	05.89 - 06.94	70	2165	4	J7T 780	**T787B**			
2.2 4x4	06.94 - 10.97	74	2165	4	J7T 600	**T787B**			
Twingo (C06_)									
1.2	03.93 - 10.96	40	1239	4	C3G 702/C3G 700	**T647B**			
1.2	05.96 - 10.98	40	1149	4	D7F 700/D7F 701	**T767B**			
	11.98 -	40	1149	4	D7F 700/D7F 701	**T319B**			
1.2	05.96 - 10.98	43	1149	4	D7F 700/D7F 701	**T767B**			
	11.98 -	43	1149	4	D7F 700/D7F 701	**T319B**			
1.2 16V	08.04 -	44	1149	4	D4F 708	**T495B**			
1.2 16V	01.01 -	55	1149	4	D4F 702	**T495B**			
Twingo (CN0_)									
1.2	03.07 -	43	1149	4	D7F 800	**T319B**			
1.2 16V	03.07 -	56	1149	4	D4F 772	**T495B**			

RENAULT Twingo (CN0_) ▶

model	year	kW	cm³	cyl	engine	I	II	III	info
Twingo (CN0_)									
1.2 Turbo (CN0C, CN0F)	03.07 -	74	1149	4	D4F 780/D4F 782	**T317B**			
Twingo Van (S06_)									
1.2	03.93 - 05.96	40	1239	4	C3G 702/C3G 700	**T647B**			
1.2	05.96 -	43	1149	4	D7F 706/D7F 701	**T767B**			
ROVER									
100 (Metro) (XP)									
111 C/L/S	03.90 - 12.98	44	1119	4	11 K2D/11 K2A	**T560B**			
114 GSi	10.94 - 10.95	76	1396	4	14 K4F	**T561B**			
114 GTI 16V	03.90 - 08.91	69	1396	4	14 K4C/14 K4D	**T561B**			
114 GTI 16V	08.91 - 12.98	76	1396	4	14 K4F	**T561B**			
114 GTI/GT 16V cat	03.90 - 12.98	66	1396	4	14 K4C/14 K4D	**T561B**			
114 S/L/GTA	03.90 - 12.98	55	1396	4	14 K2D/14 K2A	**T563B**			
100 Cabriolet (XP)									
111	04.94 - 10.97	44	1119	4	11 K2D	**T563B**			
114	04.94 - 10.97	55	1396	4	14 K2D/14 K2A	**T563B**			
114	03.97 - 10.98	75	1396	4	14 K4F	**T561B**			
200 (RF)									
211	01.98 - 03.00	44	1119	4	11 K2D	**T563B**			
1.4	01.96 - 12.97	66	1396	4	14 K4D	**T562B**			
214 i	11.95 - 03.00	55	1396	4	14 K2F	**T563B**			
214 Si	11.95 - 03.00	76	1396	4	14 K4F	**T564B**			with distributor
	11.95 - 03.00	76	1396	4	14 K4F	**T565B**			semidirect
216 Si	11.95 - 03.00	82	1588	4	16 K4F	**T564B**			with distributor
	11.95 - 03.00	82	1588	4	16 K4F	**T565B**			semidirect
218 K Vi	11.95 - 03.00	107	1796	4	18 K4K	**T565B**			semidirect
200 Coupe (XW)									
216	10.92 - 06.99	90	1590	4	D 16 A8	**T572B**			
220 GSi	05.94 - 06.99	100	1994	4	20 T4H	**T666B**			
220 Turbo	10.92 06.99	147	1994	4	20 T4G	**T752B**			
200 Hatchback (XW)									
214	09.93 - 10.95	55	1396	4	14 K2D/14 K2A	**T562B**			
214 GSi/Si	12.92 - 10.95	76	1396	4	14 K4F	**T571B**			
214 GSi/Si	01.90 - 10.95	70	1396	4	14 K4C	**T571B**			
214 Si/Gsi	10.89 - 10.95	66	1396	4	14 K4C/14 K4D	**T562B**	**T571B**		boot design
216 GSi	10.89 - 10.95	82	1590	4	D 16 Z2	**T572B**			
216 GTi	09.90 - 10.95	90	1590	4	D 16 A8	**T572B**			
220 GTi	01.93 - 10.95	100	1994	4	20 T4H	**T752B**			
220 GTi	09.91 - 10.95	103	1994	4	20 M4F	**T752B**			
220 Turbo	01.93 - 10.95	147	1994	4	20 T4G	**T752B**			
25 (RF)									
1.4 16V	10.99 - 05.05	62	1396	4	14 K4M	**T564B**			with distributor
	10.99 - 05.05	62	1396	4	14 K4M	**T565B**			semidirect
1.4 16V	10.99 - 05.05	76	1396	4	14 K4F	**T564B**			with distributor
	10.99 - 05.05	76	1396	4	14 K4F	**T565B**			semidirect
1.6 16V	10.99 - 05.05	80	1588	4	16 K4F	**T564B**			with distributor
	10.99 - 05.05	80	1588	4	16 K4F	**T565B**			semidirect
1.8 16V	10.99 - 05.05	85	1796	4	18 K4F	**T564B**			with distributor
	10.99 - 05.05	85	1796	4	18 K4F	**T565B**			semidirect
1.8 16V	02.00 - 05.05	107	1796	4	18 K4K	**T565B**			semidirect
400 (RT)									
414 Si	05.95 - 03.00	76	1396	4	14 K4F	**T564B**			
416 Si	05.95 - 03.00	82	1588	4	16 K4F	**T564B**			
416 Si	05.95 - 03.00	83	1590	4	D 16 Y2	**T564B**			with distributor
	05.95 - 03.00	83	1590	4	D 16 Y2	**T570B**			without distributor
420 Si Lux	12.95 - 03.00	100	1994	4	20 T4H	**T569B**			
414	01.93 - 04.95	70	1396	4	14 K4C	**T571B**			
414 GSI/SI	04.90 - 04.95	66	1396	4	14 K4C/14 K4D	**T562B**	**T571B**		boot design
414 GSI/SI cat	01.93 - 04.95	76	1396	4	14 K4F	**T562B**			
416 GSI	04.90 - 04.95	82	1590	4	D 16 Z2	**T572B**			
416 GTI	04.90 - 04.95	90	1590	4	D 16 A8	**T572B**			
420 GSI/SLI/GTI/Vitesse	01.93 - 04.95	100	1994	4	20 T4H	**T666B**			
420 GTI/GSI/Vitesse	02.92 - 04.95	103	1994	4	20 M4F	**T666B**			
420 Turbo	01.93 - 04.95	147	1994	4	20 T4G	**T666B**			
400 Hatchback (RT)									
414	03.96 - 12.97	55	1396	4	14 K2F	**T564B**			
414 Si	05.95 - 03.00	76	1396	4	14 K4F	**T564B**			
416 Si	05.95 - 03.00	82	1588	4	16 K4F	**T564B**			
416 Si	06.95 - 03.00	83	1590	4	D 16 Y2	**T564B**			with distributor
	06.95 - 03.00	83	1590	4	D 16 Y2	**T570B**			without distributor

ROVER 400 Hatchback (RT) ▶

model	year	kW	cm³	cyl	engine	I	II	III	info
400 Hatchback (RT)									
420 Si Lux	12.95 - 03.00	100	1994	4	20 T4H	**T569B**			
400 Tourer (XW)									
1.6 i	05.94 - 11.98	82	1590	4	D 16 Z2	**T564B**			
1.6 i	05.94 - 11.98	90	1590	4	D 16 A8	**T564B**			with distributor
	05.94 - 11.98	90	1590	4	D 16 A8	**T572B**			without distributor
1.8 i	06.96 - 11.98	107	1796	4	18 K4K	**T565B**			semidirect
2.0 i	05.94 - 11.98	100	1994	4	20 T4H	**T569B**			
45 (RT)									
1.4	02.00 - 05.05	76	1396	4	14 K4F	**T565B**			semidirect
1.6	02.00 - 05.05	80	1588	4	16 K4F	**T565B**			semidirect
1.8	02.00 - 05.05	86	1796	4	18 K4F	**T565B**			semidirect
2.0 V6	02.00 - 05.05	110	1997	6	20 K4F	**T365C**			semidirect
45 Sedan (RT)									
1.4	02.00 - 05.05	76	1396	4	14 K4F	**T565B**			semidirect
1.6	02.00 - 05.05	80	1588	4	16 K4F	**T565B**			semidirect
1.8	02.00 - 05.05	86	1796	4	18 K4F	**T565B**			semidirect
2.0 V6	02.00 - 05.05	110	1997	6	20 K4F	**T365C**			semidirect
600 (RH)									
618 i/Si	03.96 - 02.99	85	1850	4	F 18 A3	**T895B**			
620 i	08.93 - 06.96	85	1997	4	F 20 Z2	**T895B**			
620 Si	08.93 - 02.99	96	1997	4	F 20 Z1	**T895B**			
620 Ti Vitesse	07.94 - 02.99	147	1994	4	20 T4G	**T569B**			
623 Si	08.93 - 02.99	116	2259	4	H 23 A3	**T570B**			
75 (RJ)									
1.8	02.99 - 05.05	88	1796	4	K 1.8	**T565B**			semidirect
1.8 Turbo	05.03 - 05.05	110	1796	4	18 K4G	**T565B**			semidirect
2.0 V6	02.99 - 05.05	110	1997	6	20 K4F	**T365C**			semidirect
2.5 V6	02.99 - 10.01	129	2497	6	KV 6	**T365C**			semidirect
2.5 V6	10.01 - 05.05	130	2497	6	25 K4F	**T365C**			semidirect
75 Tourer (RJ)									
1.8	08.01 - 05.05	88	1796	4	K 1.8	**T565B**			semidirect
1.8 Turbo	05.03 - 05.05	110	1796	4	18 K4G	**T565B**			semidirect
2.0 V6	08.01 - 05.05	110	1997	6	20 K4F	**T365C**			semidirect
2.5 V6	08.01 - 05.05	130	2497	6	KV 6	**T365C**			semidirect
800 (XS)									
820	10.88 - 10.91	74	1994	4		**T665B**			
820 I/SI (RS)	01.92 - 02.99	100	1996	4	20 T4H	**T568B**			
820 Sport	04.94 - 03.96	145	1994	4	20 T4G	**T664B**			
820e	10.86 - 10.91	88	1994	4	20 HS	**T665B**			
825 Si Lux (RS)	04.96 - 02.99	129	2497	6	25 K4F	**T567B**			
827 SI/Sterling (XS)	02.88 - 12.91	130	2675	6	C 27 A2	**T363B**			
827 SI/Sterling (XS) cat	02.88 - 02.99	124	2675	6	C 27 A1	**T363B**			
800 Coupe									
825 Si (RS)	04.96 - 02.99	129	2497	6	25 K4F	**T567B**			
827 24V (RS)	08.92 - 02.99	124	2675	6	C 27 A1	**T363B**			
800 Hatchback (XS)									
2.5	02.96 - 10.98	129	2497	6	25 K4F	**T567B**			
2.5 Si	02.96 - 10.98	129	2497	6	25 K4F	**T567B**			
820 I/SI (XS)	01.93 - 02.99	100	1996	4	20 T4H	**T568B**			
820 Sport	04.94 - 03.96	145	1994	4	20 T4G	**T664B**			
827 24V I/SI (RS) cat	01.92 - 02.99	124	2675	6	C 27 A1	**T363B**			
827 Vitesse (XS) cat	10.88 - 12.91	124	2675	6	C 27 A1	**T363B**			
827 Vitesse/SLI	10.88 - 12.91	130	2675	6	C 27 A2	**T363B**			
Cabriolet (XW)									
214 1.4	01.92 - 11.99	66	1396	4	14 K4C/14 K4D	**T562B**			
214 1.4i 16V	01.93 - 11.99	76	1396	4	14 K4F	**T561B**			with distributor
	01.93 - 11.99	76	1396	4	14 K4F	**T565B**			semidirect
216 1.6i	01.92 - 11.99	90	1590	4	D 16 A8	**T572B**			
216 1.6i 16V	01.96 - 11.99	82	1588	4	16 K4F	**T564B**			
Coupe									
1.6 16 V	03.96 - 11.99	82	1588	4	16 K4F	**T564B**			
Mini Mk I									
1000	01.92 - 06.93	30	999	4	99 HD 81	**T663B**			
1300	10.92 - 11.00	37	1273	4	12 A2B	**T663B**			
1300	01.92 - 04.95	39	1273	4	12 A2D	**T663B**			
1300	01.91 - 12.91	45	1273	4	12 A2A	**T663B**			
1300	10.96 - 11.00	46	1275	4	12 A2E/12 A2L	**T366B**			
1300	01.92 - 09.96	46	1275	4	12 A2E/12 A2L	**T663B**			
1300 Cabrio	09.92 - 04.95	46	1273	4	12 A2E	**T663B**			

ROVER Montego

model	year	kW	cm³	cyl	engine	I	II	III	info
Montego									
2.0 i cat	12.90 - 10.94	75	1996	4	20 H	**T364B**			
2.0 GTI/LXI	12.90 - 12.93	75	1996	4	20 H	**T364B**			
SAAB									
900 I (AC4, AM4)									
2.0 -16	01.86 - 12.88	92	1985	4	B202XI	**T935B**			
2.0 -16	01.89 - 12.93	93	1985	4	B202I	**T935B**			
2.0 c	07.82 - 12.88	74	1985	4	B201XC/B 20	**T373B**			
2.0 c	11.80 - 08.84	79	1985	4	B20T/BT 20	**T373B**			
2.0 i	09.85 - 08.90	81	1985	4	B201	**T373B**			
2.0 i	11.80 - 08.90	85	1985	4	BI 20/B201XI	**T373B**			
2.0 S Turbo-16	07.91 - 12.93	104	1985	4	B202S	**T934B**	**T936B**		boot design
2.0 S Turbo-16	01.92 - 12.93	107	1985	4	B202S	**T936B**			
2.0 Turbo	10.86 - 12.91	103	1985	4	B201XL	**T373B**			
2.0 Turbo	10.80 - 07.85	107	1985	4	B201S/BSI 20	**T374B**			
2.0 Turbo-16	11.85 - 12.93	118	1985	4	B202XL	**T935B**			
2.0 Turbo-16 S	01.84 - 12.88	129	1985	4	B202XL	**T935B**			
2.0 Turbo-16 S cat	01.89 - 12.93	129	1985	4	B202XL	**T935B**			
2.1 -16	08.90 - 12.93	100	2119	4	B212I	**T936B**			
900 I Cabriolet									
2.0 -16	01.90 - 06.94	93	1985	4	B202I	**T935B**			
2.0 S Turbo-16	09.91 - 06.94	104	1985	4	B202S	**T934B**	**T936B**		boot design
2.0 Turbo-16	11.86 - 06.94	118	1985	4	B202XL	**T935B**			
2.0 Turbo-16 S	11.86 - 06.94	129	1985	4	B202XL	**T935B**			
2.1 -16	08.90 - 06.94	100	2119	4	B212I	**T936B**			
900 I Combi Coupe									
2.0 -16	01.86 - 12.88	92	1985	4	B202XI	**T935B**			
2.0 -16	01.89 - 08.92	93	1985	4	B202I	**T935B**			
2.0 c	09.79 - 12.88	74	1985	4	B201XC/B 20	**T373B**			
2.0 c	09.78 - 08.84	79	1985	4	B20T/BT 20	**T373B**			
2.0 i	09.85 - 08.90	81	1985	4	B201	**T373B**			
2.0 i	11.80 - 12.88	85	1985	4	BI 20/B201XI	**T373B**			
2.0 S Turbo-16	09.91 - 07.93	104	1985	4	B202S	**T934B**	**T936B**		boot design
2.0 Turbo	10.86 - 12.91	103	1985	4	B201XL	**T373B**			
2.0 Turbo	09.78 - 07.85	107	1985	4	B201S/BSI 20	**T374B**			
2.0 Turbo	01.86 - 12.88	110	1985	4	B201XL	**T373B**			
2.0 Turbo-16	11.85 - 06.94	118	1985	4	B202XL	**T935B**			
2.0 Turbo-16	01.93 - 06.94	132	1985	4	B202L	**T938B**			
2.0 Turbo-16 S	02.84 - 12.88	129	1985	4	B202XL	**T935B**			
2.0 Turbo-16 S cat	01.89 - 12.93	125	1985	4	B202XL	**T935B**			
2.1 -16	09.90 - 07.93	100	2119	4	B212I	**T936B**			
900 II									
2.0 -16 Turbo	07.93 - 02.98	136	1985	4	B204L	**T938B**			
2.0 i	08.94 - 02.98	96	1985	4	B204I	**T105B**			
2.0 i	07.93 - 07.94	98	1985	4	B206I	**T105B**			
2.3 -16	07.93 - 02.98	110	2290	4	B234I	**T105B**			
2.5 -24 V6	07.93 - 02.98	125	2498	6	B258I	**T779C**	**T989B**		original / alternative
900 II Cabriolet									
2.0 -16 Turbo	12.93 - 02.98	136	1985	4	B204L	**T938B**			
2.0 i	12.93 - 02.98	96	1985	4	B204I	**T105B**			
2.3 -16	12.93 - 02.98	110	2290	4	B234I	**T105B**			
2.5 -24 V6	12.93 - 02.98	125	2498	6	B258I	**T779C**	**T989B**		original / alternative
900 II Coupe									
2.0 -16 Turbo	12.93 - 02.98	136	1985	4	B204L	**T938B**			
2.0 i	08.94 - 02.98	96	1985	4	B204I	**T105B**			
2.0 i	12.93 - 07.94	98	1985	4	B206I	**T105B**			
2.3 -16	12.93 - 02.98	110	2290	4	B234I	**T105B**			
2.5 -24 V6	12.93 - 02.98	125	2498	6	B258I	**T779C**	**T989B**		original / alternative
9000									
2.0 -16	01.89 - 01.93	94	1985	4	B202I	**T935B**			
2.0 -16 CD	09.93 - 12.98	96	1985	4	B204I	**T936B**			
2.0 -16 CD	09.93 - 12.98	110	1985	4	B204S/B204E	**T934B**			
2.0 -16 Turbo	05.88 - 08.93	118	1985	4	B202XL	**T934B**			
2.0 -16 Turbo	04.85 - 12.91	129	1985	4	B202XL	**T934B**			
2.0 -16 Turbo CD	09.92 - 12.98	108	1985	4	B204E	**T936B**			
2.0 -16 Turbo CD	09.88 - 08.93	120	1985	4	B202XL	**T934B**			
2.0 -16 Turbo CD	09.89 - 12.98	136	1985	4	B202L	**T934B**			
2.3	09.90 - 10.98	165	2290	4	B234R	**T934B**			
2.3 -16 CD	08.89 - 12.98	107	2290	4	B234I	**T938B**			
2.3 -16 CD Turbo	07.90 - 12.98	147	2290	4	B234L	**T934B**			

SAAB 9000 ▶

model	year	kW	cm³	cyl	engine	I	II	III	info
9000									
2.3 -16 CDE	09.93 - 12.98	108	2290	4	B234I	**T938B**			
2.3 -16 CDE Eco-Power	09.93 - 12.98	125	2290	4	B234E	**T934B**			
2.3 -16 Turbo	09.90 - 08.93	143	2290	4	B234L	**T934B**			
3.0 -24 V6 CD/CDE	07.94 - 12.98	155	2962	6	B308I	**T779C**	**T989B**		original / alternative
9000 CC									
2.0 -16	12.85 - 12.88	92	1985	4	B202XI	**T935B**			
2.0 -16	12.85 - 08.88	94	1985	4	B202XI	**T935B**			
2.0 -16 CS	01.89 - 12.98	94	1985	4	B202I	**T935B**			
2.0 -16 CS	09.93 - 12.98	96	1985	4	B204I	**T936B**			
2.0 -16 ND Turbo	09.93 - 12.98	110	1985	4	B202S	**T934B**			
2.0 -16 ND Turbo	09.93 - 12.98	110	1985	4	B204E	**T936B**			
2.0 -16 Turbo	09.84 - 08.93	118	1985	4	B202XL	**T934B**			
2.0 -16 Turbo	05.88 - 08.93	120	1985	4	B202XL	**T934B**			
2.0 -16 Turbo	06.89 - 12.92	127	1985	4	B202	**T935B**			
2.0 -16 Turbo	09.84 - 12.91	129	1985	4	B202XL	**T934B**			
2.0 -16 Turbo CS	09.88 - 12.98	136	1985	4	B202L	**T934B**			
2.3 -16 Aero CS	02.93 - 12.98	162	2290	4	B234R	**T934B**			
2.3 -16 Aero CS	02.93 - 12.98	165	2290	4	B234R	**T934B**			
2.3 -16 CS	09.89 - 12.98	107	2290	4	B234I	**T938B**			
2.3 -16 CSE	09.93 - 12.98	108	2290	4	B234I	**T938B**			
2.3 -16 CSE Eco Power	09.93 - 12.98	125	2290	4	B234E	**T934B**			
2.3 -16 Turbo	09.90 - 12.98	143	2290	4	B234L	**T934B**			
2.3 -16 Turbo CSE	09.93 - 12.98	147	2290	4	B234L	**T934B**			
3.0 -24 V6 CS/CSE	07.94 - 12.98	155	2962	6	B308I	**T779C**	**T989B**		original / alternative
9-3 (YS3D)									
2.0 i	02.98 - 09.02	96	1985	4	B204I	**T105B**			
2.0 SE Turbo	02.98 - 09.02	147	1985	4	B204R	**T105B**			
2.0 Turbo	10.98 - 09.02	113	1985	4	B204E	**T105B**			
2.3 i	02.98 - 09.02	110	2290	4	B234I	**T105B**			
9-3 Cabriolet (YS3D)									
2.0 i	02.98 - 08.03	96	1985	4	B204I	**T105B**			
2.0 SE Turbo	02.98 - 08.03	147	1985	4	B204R	**T105B**			
2.0 Turbo	10.98 - 08.03	113	1985	4	B204E	**T105B**			
2.0 Turbo	02.98 - 08.03	136	1985	4	B205L/B204L	**T105B**			
2.0 Turbo	10.99 - 08.03	151	1985	4	B205R	**T105B**			
2.3 i	02.98 - 08.03	110	2290	4	B234I	**T105B**			
SEAT									
Alhambra (7V8, 7V9)									
2.0 i	04.96 - 03.10	85	1984	4	ATM	**T854C**	**T076B**		original / alternative
	04.96 - 03.10	85	1984	4	ADY	**T942C**	**T067B**		original / alternative
Altea (5P1)									
1.2 TSI	04.10 -	77	1197	4	CBZB	**T406C**	**T056B**		original / alternative
1.6	03.04 -	75	1595	4	BGU/CCSA/BSF/CMXA/BSE	**T854C**	**T076B**		original / alternative
1.6 LPG	09.09 -	75	1595	4	CHGA	**T854C**	**T076B**		original / alternative
Altea XL (5P5, 5P8)									
1.2 TSI	04.10 -	77	1197	4	CBZB	**T406C**	**T056B**		original / alternative
1.6	10.06 -	75	1595	4	CCSA/BSF/CMXA/BSE	**T854C**	**T076B**		original / alternative
1.6 LPG	09.09 -	75	1595	4	CHGA	**T854C**	**T076B**		original / alternative
Arosa (6H)									
1.0	05.97 - 06.04	37	999	4	AUC	**T578C**	**T074B**		original / alternative
	05.97 - 06.04	37	999	4	AER	**T819C**	**T053B**		original / alternative
	05.97 - 06.04	37	999	4	ANV	**T857C**	**T079B**		original / alternative
1.4	05.97 - 06.04	44	1390	4	AUD	**T578C**	**T074B**		original / alternative
	05.97 - 06.04	44	1390	4	AEX	**T819C**	**T053B**		original / alternative
	05.97 - 06.04	44	1390	4	ANW	**T857C**	**T079B**		original / alternative
1.4 16V	01.00 - 06.04	74	1390	4	AFK/AUB/AQQ	**T874C**	**T004B**		original / alternative
Cordoba (6K1, 6K2)									
1.0 i	09.96 - 06.99	37	999	4	AER	**T819C**	**T053B**		original / alternative
1.4	12.97 - 04.99	40	1390	4	ANX	**T819C**	**T053B**		original / alternative
1.4 i	06.94 - 06.99	44	1390	4	AEX/AKV	**T819C**	**T053B**		original / alternative
	06.94 - 06.99	44	1390	4	ABD	**T820C**	**T054B**		original / alternative
1.4 i 16V	09.96 - 06.99	74	1390	4	AFH	**T842C**	**T006B**		original / alternative
1.6 i	02.93 - 06.99	55	1598	4	ALM/AEE	**T819C**	**T053B**		original / alternative
	02.93 - 06.99	55	1598	4	ABU	**T820C**	**T054B**		original / alternative
1.6 i	05.94 - 06.99	55	1595	4	1F	**T650C**	**T035B**	**T731B**	orig. / alter. / suppl.
1.6 i	07.96 - 10.99	74	1595	4	AKL/AFT	**T843C**	**T066B**		original / alternative
1.8 i	02.93 - 06.99	66	1781	4	ADZ	**T651C**	**T036B**		original / alternative
	02.93 - 06.99	66	1781	4	ABS	**T821C**	**T040B**		original / alternative
1.8 i 16V	10.93 - 08.96	95	1781	4	ADL	**T601C**	**T016B**		original / alternative

SEAT Cordoba (6K1, 6K2) ▶

model	year	kW	cm³	cyl	engine	I	II	III	info
Cordoba (6K1, 6K2)									
2.0 i	02.93 - 06.99	85	1984	4	2E	**T650C**	**T035B**	**T731B**	orig. / alter. / suppl.
2.0 i 16V	08.96 - 06.99	110	1984	4	ABF	**T601C**	**T016B**		original / alternative
Cordoba (6K2)									
1.0	06.99 - 10.02	37	999	4	ANV/ALD/AUC	**T578C**	**T074B**		original / alternative
1.4	06.99 - 10.02	44	1390	4	ANW/AKK/AUD	**T578C**	**T074B**		original / alternative
1.4 16V	05.00 - 10.02	55	1390	4	APE/AUA	**T874C**	**T004B**		original / alternative
1.4 16V	02.00 - 10.02	74	1390	4	AUB/AQQ	**T874C**	**T004B**		original / alternative
1.6	06.99 - 10.02	55	1598	4	ALM	**T865C**	**T055B**		original / alternative
1.6	06.99 - 10.02	74	1595	4	AKL/APF/AEH	**T854C**	**T076B**		original / alternative
Cordoba (6L2)									
1.6	04.03 - 11.09	74	1598	4	BAH	**T387C**	**T098B**		original / alternative
2.0	09.02 - 11.09	85	1984	4	AZL/BBX	**T854C**	**T076B**		original / alternative
Cordoba Vario (6K5)									
1.4	06.99 - 12.02	44	1390	4	ANW/AKK/AUD	**T578C**	**T074B**		original / alternative
1.4 16V	06.99 - 12.02	55	1390	4	APE/AUA	**T874C**	**T004B**		original / alternative
1.4 i	09.96 - 06.99	44	1390	4	AEX/AKV	**T819C**	**T053B**		original / alternative
1.6	06.99 - 12.02	55	1598	4	ALM	**T865C**	**T055B**		original / alternative
1.6	06.99 - 12.02	74	1595	4	AKL/APF/AEH/AUR	**T854C**	**T076B**		original / alternative
1.6 i	09.96 - 06.99	55	1598	4	ALM/AEE	**T658C**	**T048B**		original / alternative
1.6 i	05.97 - 06.99	55	1595	4	1F	**T650C**	**T035B**	**T731B**	orig. / alter. / suppl.
1.6 i	09.96 - 06.99	74	1595	4	AFT	**T843C**	**T066B**		original / alternative
Exeo (3R2)									
1.6	03.09 - 09.10	75	1595	4	ALZ	**T854C**	**T076B**		original / alternative
1.8 T	12.08 - 05.10	110	1781	4	CFMA	**T854C**	**T076B**		original / alternative
Exeo ST (3R5)									
1.6	06.09 - 09.10	75	1595	4	ALZ	**T854C**	**T076B**		original / alternative
1.8 T	06.09 - 05.10	110	1781	4	CFMA	**T854C**	**T076B**		original / alternative
Ibiza I (021A)									
0.9	08.90 - 05.93	29	903	4	146 A 000/09 NCA	**T109B**			
0.9	08.86 - 05.93	32	903	4	146 A 000	**T109B**			
1.2	11.84 - 12.93	44	1193	4	021 A 1000	**T912B**			
1.2	11.84 - 12.93	47	1193	4	021 A 1000	**T912B**			
1.2 i	01.89 - 05.93	52	1193	4	021 C.1000	**T912B**			
1.5	11.84 - 05.93	63	1461	4	021 A 2000	**T912B**			
1.5 i	10.86 - 05.93	65	1461	4	021 D.2000	**T912B**			
1.5 i	10.86 - 03.91	74	1461	4	021 B.2000	**T912B**			
	04.91 - 05.93	74	1461	4	021 B.2000	**T654C**	**T045B**		original / alternative
1.5 i cat	10.86 - 05.93	66	1461	4	021 C.2000	**T912B**			
1.7	01.91 - 05.93	72	1675	4	021 A.3000	**T732B**			
1.7	01.91 - 05.93	76	1675	4	021 B.3000	**T732B**			
Ibiza II (6K1)									
1.0	03.93 - 09.96	33	1043	4	AAU	**T650C**	**T035B**	**T731B**	orig. / alter. / suppl.
1.0 i	09.96 - 08.99	37	999	4	AER	**T819C**	**T053B**		original / alternative
1.3 i	03.93 - 08.99	40	1272	4	2G/AAV	**T646C**	**T043B**		original / alternative
1.4 i	09.93 - 08.99	44	1390	4	AEX/AKV/APQ	**T819C**	**T053B**		original / alternative
	09.93 - 08.99	44	1390	4	ABD	**T820C**	**T054B**		original / alternative
1.4 i 16V	06.97 - 08.99	74	1390	4	AFH	**T842C**	**T006B**		original / alternative
1.6 i	03.93 - 08.99	55	1598	4	ABU	**T654C**	**T045B**		original / alternative
	03.93 - 08.99	55	1598	4	ALM/AEE	**T819C**	**T053B**		original / alternative
1.6 i	09.94 - 06.99	55	1595	4	1F	**T650C**	**T035B**	**T731B**	orig. / alter. / suppl.
1.6 i	04.96 - 08.99	74	1595	4	AFT	**T843C**	**T066B**		original / alternative
1.8 i	03.93 - 08.99	66	1781	4	ADZ	**T651C**	**T036B**		original / alternative
	03.93 - 08.99	66	1781	4	ABS	**T821C**	**T040B**		original / alternative
1.8 i 16V	11.93 - 08.96	95	1781	4	ADL	**T601C**	**T016B**		original / alternative
2.0 i	03.93 - 08.99	85	1984	4	2E/AGG	**T821C**	**T040B**		original / alternative
2.0 i 16V	08.96 - 08.99	110	1984	4	ABF	**T601C**	**T016B**		original / alternative
Ibiza III (6K1)									
1.0	08.99 - 02.02	37	999	4	ANV/ALD/AUC	**T578C**	**T074B**		original / alternative
1.4	08.99 - 02.02	44	1390	4	ANW/AKK/AUD	**T578C**	**T074B**		original / alternative
1.4 16V	05.00 - 02.02	55	1390	4	APE/AUA	**T874C**	**T004B**		original / alternative
1.4 16V	08.99 - 02.02	74	1390	4	AUB/AQQ	**T874C**	**T004B**		original / alternative
1.6	08.99 - 02.02	55	1598	4	ALM	**T865C**	**T055B**		original / alternative
1.6	08.99 - 02.02	74	1595	4	AKL/APF/AEH/AUR	**T854C**	**T076B**		original / alternative
Ibiza IV (6L1)									
1.4 16V	02.02 - 11.09	74	1390	4	AUB	**T874C**	**T004B**		original / alternative
1.6	02.03 - 11.09	74	1598	4	BAH	**T387C**	**T098B**		original / alternative
2.0	04.02 - 11.09	85	1984	4	AZL/BBX	**T854C**	**T076B**		original / alternative
Ibiza V (6J5)									
1.2 TSI	09.10 -	77	1197	4	CBZB	**T406C**	**T056B**		original / alternative

SEAT Ibiza V Sportcoupe (6J1)

model	year	kW	cm³	cyl	engine	I	II	III	info
Ibiza V Sportcoupe (6J1)									
1.2 TSI	09.10 -	77	1197	4	CBZB	**T406C**	**T056B**		original / alternative
Ibiza V ST (6J8)									
1.2 TSI	09.10 -	77	1197	4	CBZB	**T406C**	**T056B**		original / alternative
1.2 TSI	09.12 -	63	1197	4	CBZA	**T406C**	**T056B**		original / alternative
Inca (6K9)									
1.4 16V	04.00 - 06.03	55	1390	4	AUA	**T874C**	**T004B**		original / alternative
1.4 i	11.95 - 06.03	44	1390	4	AUD	**T578C**	**T074B**		original / alternative
	11.95 - 06.03	44	1390	4	AEX/AKV	**T819C**	**T053B**		original / alternative
1.6 i	11.95 - 05.98	55	1595	4	1F	**T819C**	**T053B**		original / alternative
1.6 i	06.97 - 09.00	55	1598	4	ALM/AEE	**T654C**	**T045B**		original / alternative
Leon (1M1)									
1.4 16V	11.99 - 06.06	55	1390	4	AHW/AXP/APE	**T874C**	**T004B**		original / alternative
1.6	11.99 - 06.06	74	1595	4	AKL/APF/AEH	**T674C**	**T059B**		original / alternative
1.6	10.05 - 06.06	75	1595	4	BGU/BFQ	**T854C**	**T076B**		original / alternative
1.6 16 V	09.00 - 06.06	77	1598	4	AUS	**T874C**	**T004B**		original / alternative
1.8 20V	11.99 - 06.06	92	1781	4	AGN/APG	**T559C**			
2.8 Cupra 4	02.01 - 06.06	150	2792	6	AUE	**T165C**			
Leon (1P1)									
1.2 TSI	02.10 -	77	1197	4	CBZB	**T406C**	**T056B**		original / alternative
1.6	07.05 -	75	1595	4	CCSA/BSF/CMXA/BSE	**T854C**	**T076B**		original / alternative
1.6 LPG	12.09 -	75	1595	4	CHGA	**T854C**	**T076B**		original / alternative
Malaga (023A)									
1.2	05.85 - 12.93	44	1193	4	021 A 1000	**T912B**			
1.2	11.84 - 12.93	47	1193	4	021 A 1000	**T912B**			
1.2 i	12.89 - 12.93	52	1193	4	021 C.1000	**T912B**			
1.5	05.85 - 12.93	63	1461	4	021 A 2000	**T912B**			
1.5 i	01.87 - 12.93	74	1461	4	021 B.2000	**T912B**			
1.5 i cat	10.86 - 12.93	66	1461	4	021 A 2000/_C.2000/_ D.2000	**T912B**			
Marbella (28)									
0.8	08.86 - 12.93	25	843	4	08 NCA	**T455B**			
0.9	01.87 - 12.93	29	903	4	100 GL 7000/09 NCA	**T455B**			
0.9	07.97 - 10.98	32	899	4	08 NCB	**T600B**			
0.9 cat	01.90 - 11.96	29	903	4	100 GL 7000/09 NCB	**T455B**			
0.9 cat	11.96 - 10.98	30	899	4	08 NCB	**T600B**			
Marbella Van (028A)									
0.8	01.87 - 12.93	25	843	4	08 NCA	**T455B**			
0.9	01.87 - 12.93	29	903	4	09 NCA	**T455B**			
0.9 cat	01.87 - 12.93	29	903	4	09 NCB	**T455B**			
Terra (24)									
0.9	02.87 - 12.96	29	903	4	09 NCA	**T499B**			DIN
	02.87 - 12.96	29	903	4	09 NCA	**T600B**			PIN
0.9 cat	02.92 - 12.94	29	903	4	09 NCB	**T600B**			
Terra Van (024A)									
0.9	01.87 - 12.95	29	903	4	09 NCA	**T499B**			DIN
	01.87 - 12.95	29	903	4	09 NCA	**T600B**			PIN
0.9 cat	01.90 - 12.95	29	903	4	09 NCB	**T600B**			
Toledo I (1L)									
1.6 i	05.91 - 12.93	52	1595	4	1F	**T650C**	**T035B**	**T731B**	orig. / alter. / suppl.
1.6 i	05.91 - 03.99	54	1595	4	EZ/ABN/1F	**T650C**	**T035B**	**T731B**	orig. / alter. / suppl.
1.6 i	01.93 - 03.99	55	1595	4	1F	**T650C**	**T035B**	**T731B**	orig. / alter. / suppl.
1.6 i	11.96 - 03.99	74	1595	4	AFT	**T843C**	**T066B**		original / alternative
1.8 16V	05.91 - 03.99	92	1781	4	PL	**T650C**	**T035B**	**T731B**	orig. / alter. / suppl.
1.8 16V	05.91 - 03.99	98	1781	4	KR	**T714C**	**T017B**		original / alternative
1.8 i	05.91 - 12.96	65	1781	4	RP	**T650C**	**T035B**	**T731B**	orig. / alter. / suppl.
1.8 i	11.93 - 12.96	66	1781	4	ADZ	**T651C**	**T036B**		original / alternative
	11.93 - 12.96	66	1781	4	ABS	**T821C**	**T040B**		original / alternative
2.0 i	05.91 - 03.99	85	1984	4	2E	**T821C**	**T040B**		original / alternative
2.0 i 16V	11.93 - 03.99	110	1984	4	ABF	**T601C**	**T016B**		original / alternative
Toledo II (1M2)									
1.4 16V	07.99 - 05.06	55	1390	4	AHW/AXP/BCA/APE/AUA	**T874C**	**T004B**		original / alternative
1.6	04.99 - 09.00	74	1595	4	AKL/APF/AEH	**T674C**	**T059B**		original / alternative
1.6 16V	09.00 - 05.06	77	1598	4	AUS	**T874C**	**T004B**		original / alternative
1.8 20V	04.99 - 05.06	92	1781	4	AGN/APG	**T559C**			
2.3 V5	04.99 - 05.01	110	2324	5	AGZ	**T659C**			
Toledo III (5P2)									
1.6	10.04 - 05.09	75	1595	4	BGU/BSF/BSE	**T854C**	**T076B**		original / alternative
Toledo IV (KG3)									
1.2 TSI	07.12 -	63	1197	4	CBZA	**T406C**	**T056B**		original / alternative
1.2 TSI	07.12 -	77	1197	4	CBZB	**T406C**	**T056B**		original / alternative

model	year	kW	cm³	cyl	engine	I	II	III	info
SKODA									
1000 MB, 1100 MB									
1.0	09.64 - 01.70	27	998	4		**T369S**	**T409H**		
1.0	03.66 - 01.70	32	998	4		**T369S**	**T409H**		
1.0	01.69 - 01.70	34	998	4		**T369S**	**T409H**		
1.1	01.69 - 01.70	34	1107	4		**T369S**	**T409H**		
1203									
1203 1.2	74 - 85	35	1221	4	776	**T641S**	**T185H**		
1203M 1.5	85 - 93	42	1443	4	776/14	**T641S**	**T185H**		
1203K 1.5	93 - 99	42	1443	4	776/14K	**T641S**	**T185H**		
100, 110									
1.0	01.70 - 12.77	29	988	4	OHV	**T369S**	**T409H**		
1.0	01.70 - 12.77	31	981	4	OHV	**T369S**	**T409H**		
1.1	12.69 - 03.82	33	1099	4		**T369S**	**T409H**		
1.1	12.69 - 03.82	35	1099	4		**T369S**	**T409H**		
1.1 LS	07.70 - 03.82	38	1099	4		**T369S**	**T409H**		
1.1 Coupe	07.70 - 03.82	38	1099	4		**T369S**	**T409H**		
105S, 105L, 105LS									
1.05	02.88 - 12.90	32	1038	4	742.10	**T369S**	**T409H**		
1.05	08.76 - 12.90	33	1038	4	742.10	**T369S**	**T409H**		
1.05	08.76 - 12.90	34	1046	4	742.10	**T369S**	**T409H**		
120L, 120LS, 120GLS, 120G Rapid									
1.2	08.87 - 12.90	35	1164	4	742.12	**T369S**	**T409H**		
1.2	10.83 - 12.90	38	1164	4	742.12	**T369S**	**T409H**		
1.2	02.83 - 12.90	43	1164	4		**T369S**	**T409H**		
1.2	08.76 - 12.90	38	1174	4		**T369S**	**T409H**		
1.2	08.76 - 12.90	43	1174	4	742.12 X	**T369S**	**T409H**		
130L, 130G, 130GL, 130G Rapid									
1.3	08.87 - 10.91	39	1280	4		**T369S**	**T409H**		
1.3	09.84 - 10.91	43	1280	4	135/8	**T369S**	**T409H**		
1.3	02.85 - 10.91	45	1280	4	742.13	**T369S**	**T409H**		
1.3	05.88 - 10.91	46	1280	4		**T369S**	**T409H**		
Fabia (6Y2)									
1.4 16V	12.99 - 03.08	55	1390	4	AUA	**T874C**	**T004B**		original / alternative
1.4 16V	12.99 - 03.08	74	1390	4	AUB	**T874C**	**T004B**		original / alternative
2.0	12.99 - 03.08	85	1984	4	AZL	**T854C**	**T076B**		original / alternative
Fabia									
1.2 TSI	03.10 -	63	1197	4	CBZA	**T406C**	**T056B**		original / alternative
1.2 TSI	03.10 -	77	1197	4	CBZB	**T406C**	**T056B**		original / alternative
Fabia Combi (6Y5)									
1.4 16V	05.00 - 12.07	55	1390	4	AUA	**T874C**	**T004B**		original / alternative
1.4 16V	04.00 - 12.07	74	1390	4	AUB	**T874C**	**T004B**		original / alternative
2.0	04.00 - 12.07	85	1984	4	AZL	**T854C**	**T076B**		original / alternative
Fabia Combi									
1.2 TSI	03.10 -	63	1197	4	CBZA	**T406C**	**T056B**		original / alternative
1.2 TSI	03.10 -	77	1197	4	CBZB	**T406C**	**T056B**		original / alternative
Fabia Sedan (6Y3)									
1.4 16V	10.99 - 12.07	55	1390	4	AUA	**T874C**	**T004B**		original / alternative
1.4 16V	12.99 - 12.07	74	1390	4	AUB	**T874C**	**T004B**		original / alternative
2.0	12.99 - 12.07	85	1984	4	AZL	**T854C**	**T076B**		original / alternative
Favorit (781)									
1.3 carb	- 12.92	43	1289	4	781.135	**T368S**	**T122H**		
1.3 carb	- 12.92	46	1289	4	781.136	**T368S**	**T122H**		
1.3 SPI	01.93 - 06.95	40	1289	4	135 BMM	**T371S**	**T145H**		
1.3 SPI	01.93 - 06.95	50	1289	4	136 BMM	**T371S**	**T145H**		
Favorit Forman (785)									
1.3 carb	- 12.92	43	1289	4	781.135	**T368S**	**T122H**		
1.3 carb	- 12.92	46	1289	4	781.136	**T368S**	**T122H**		
1.3 SPI	01.93 - 06.95	40	1289	4	135 BMM	**T371S**	**T145H**		
1.3 SPI	01.93 - 06.95	50	1289	4	136 BMM	**T371S**	**T145H**		
Favorit Pick-up (787)									
1.3 carb	- 12.92	40	1289	4	781.135	**T368S**	**T122H**		
1.3 carb	- 12.92	46	1289	4	781.136	**T368S**	**T122H**		
1.3 SPI	01.93 - 09.94	40	1289	4	135B	**T371S**	**T145H**		
1.3 SPI	01.93 - 09.94	50	1289	4	136B	**T371S**	**T145H**		
Felicia I (6U1)									
1.3 carb	10.94 - 03.98	43	1289	4	AMJ/135 L	**T194S**	**T194H**		
1.3 SPI	10.94 - 03.98	40	1289	4	135B/AMG	**T372S**	**T195H**		
1.3 SPI	10.94 - 03.98	50	1289	4	136B/AMH	**T372S**	**T195H**		
1.6	08.95 - 03.98	55	1598	4	EA111/AEE	**T642C**	**T042B**		original / alternative

SKODA Felicia I Combi (6U5) ▶

model	year	kW	cm³	cyl	engine	I	II	III	info
Felicia I Combi (6U5)									
1.3 carb	08.95 - 03.98	43	1289	4	AMJ/135 L	**T194S**	**T194H**		
1.3 SPI	08.95 - 03.98	40	1289	4	135B/AMG	**T372S**	**T195H**		
1.3 SPI	08.95 - 03.98	50	1289	4	136B/AMH	**T372S**	**T195H**		
1.6	08.95 - 03.98	55	1598	4	AEE	**T642C**	**T042B**		original / alternative
Felicia I Pick-up (797)									
1.3 i	06.97 - 04.02	40	1289	4	135B/135M	**T372S**	**T195H**		
1.3 i	06.97 - 04.02	50	1289	4	136B/136M	**T372S**	**T195H**		
1.6	06.97 - 04.02	55	1598	4	AEE	**T642C**	**T042B**		original / alternative
Felicia II (6U1, 6U5)									
1.6	01.98 - 06.01	55	1598	4	AEE	**T642C**	**T042B**		original / alternative
1.6 Combi	01.98 - 06.01	55	1598	4	AEE	**T642C**	**T042B**		original / alternative
Octavia (1U2)									
1.4 16V	09.00 - 12.10	55	1390	4	AXP/BCA	**T874C**	**T004B**		original / alternative
1.6	09.96 - 09.04	55	1598	4	AEE	**T633C**	**T041B**		original / alternative
1.6	02.97 - 12.07	74	1595	4	AKL/AEH	**T674C**	**T059B**		original / alternative
1.6	11.00 - 12.10	75	1595	4	AVU/BFQ	**T854C**	**T076B**		original / alternative
1.8	09.96 - 07.00	92	1781	4	AGN	**T559C**			ch. No. 1u-V-26001-
	09.96 - 07.00	92	1781	4	AGN	**T818C**	**T002B**		orig. / alter., ch. No.-1u-V-26000
2.0	04.99 - 05.07	85	1984	4	APK/AZH/AZJ/AQY/AEG	**T855C**	**T077B**		original / alternative
Octavia (1Z3)									
1.2 TSI	02.10 -	77	1197	4	CBZB	**T406C**	**T056B**		original / alternative
1.6	06.04 -	75	1595	4	BGU/CCSA/BSF/CMXA/BSE	**T854C**	**T076B**		original / alternative
1.6 LPG	08.09 -	75	1595	4	CHGA	**T854C**	**T076B**		original / alternative
1.6 MultiFuel	01.08 -	75	1595	4	CCSA/CMXA	**T854C**	**T076B**		original / alternative
Octavia Combi (1U5)									
1.4 16V	08.00 - 12.10	55	1390	4	AXP/BCA	**T874C**	**T004B**		original / alternative
1.6	07.98 - 09.04	55	1598	4	AEE	**T633C**	**T041B**		original / alternative
1.6	07.98 - 12.07	74	1595	4	AKL/AEH	**T674C**	**T059B**		original / alternative
1.6	09.00 - 12.10	75	1595	4	AVU/BFQ	**T854C**	**T076B**		original / alternative
1.8 20V	07.98 - 07.00	92	1781	4	AGN	**T559C**			ch. No. 1u-V-26001-
	07.98 - 07.00	92	1781	4	AGN	**T818C**	**T002B**		orig. / alter., ch. No.-1u-V-26000
2.0	04.99 - 05.07	85	1984	4	APK/AZH/AZJ/AQY/AEG	**T855C**	**T077B**		original / alternative
2.0 4x4	08.00 - 09.04	85	1984	4	AZH	**T674C**	**T059B**		original / alternative / engine code
	08.00 - 09.04	85	1984	4	AZJ	**T856C**	**T078B**		original / alternative / engine code
2.0 4x4	01.00 - 12.10	88	1984	4	ATF	**T855C**	**T077B**		original / alternative
Octavia Combi (1Z5)									
1.2 TSI	02.10 -	77	1197	4	CBZB	**T406C**	**T056B**		original / alternative
1.6	09.04 -	75	1595	4	BGU/CCSA/BSF/CMXA/BSE	**T854C**	**T076B**		original / alternative
1.6 LPG	08.09 -	75	1595	4	CHGA	**T854C**	**T076B**		original / alternative
1.6 MultiFuel	01.08 -	75	1595	4	CCSA/CMXA	**T854C**	**T076B**		original / alternative
Rapid									
1.2 TSI	07.12 -	63	1197	4	CBZA	**T406C**	**T056B**		original / alternative
1.2 TSI	07.12 -	77	1197	4	CBZB	**T406C**	**T056B**		original / alternative
Rapid Spaceback (NH1)									
1.2 TSI	07.12 -	63	1197	4	CBZA	**T406C**	**T056B**		original / alternative
1.2 TSI	07.12 -	77	1197	4	CBZB	**T406C**	**T056B**		original / alternative
Roomster (5J)									
1.2 TSI	03.10 -	63	1197	4	CBZA	**T406C**	**T056B**		original / alternative
1.2 TSI	03.10 -	77	1197	4	CBZB	**T406C**	**T056B**		original / alternative
Roomster Praktik (5J)									
1.2 TSI	03.10 -	63	1197	4	CBZA	**T406C**	**T056B**		original / alternative
Superb (3U4)									
2.0	12.01 - 03.08	85	1984	4	AZM	**T854C**	**T076B**		original / alternative
2.8 V6	12.01 - 03.08	142	2771	6	AMX	**T887C**	**T003B**		original / alternative
2.8 V6	06.02 - 03.08	140	2771	6	BBG	**T887C**	**T003B**		original / alternative
Yeti (5L)									
1.2 TSI	09.09 -	77	1197	4	CBZB	**T406C**	**T056B**		original / alternative
SMART									
Cabrio (450)									
0.6	03.00 - 01.04	40	599	3	M 160 E6AL B03/M 160.920	**T170C**	**T092B**		original / alternative
Cabrio (450)									
0.6	01.01 - 01.04	45	599	3	M 160 E6AL B05/M 160.920	**T170C**	**T092B**		original / alternative
0.6	06.02 - 01.04	52	599	3	M 160.920	**T170C**	**T092B**		original / alternative
0.7	01.03 - 01.04	45	698	3	M 160.910	**T170C**	**T092B**		original / alternative
0.7	01.03 - 01.04	55	698	3	M 160.910	**T170C**	**T092B**		original / alternative
City-Coupe (450)									
0.6	07.98 - 01.04	33	599	3	M 160 E6AL B04/M 160.920	**T170C**	**T092B**		original / alternative
0.6	07.98 - 01.04	40	599	3	M 160 E6AL B03/M 160.920	**T170C**	**T092B**		original / alternative
0.6	01.01 - 01.04	45	599	3	M 160 E6AL B05/M 160.920	**T170C**	**T092B**		original / alternative

SMART City-Coupe (450) ▶

model	year	kW	cm³	cyl	engine	I	II	III	info
City-Coupe (450)									
0.6	06.02 - 01.04	52	599	3	M 160.920	**T170C**	**T092B**		original / alternative
0.7	01.03 - 01.04	37	698	3	M 160.910	**T170C**	**T092B**		original / alternative
0.7	01.03 - 01.04	45	698	3	M 160.910	**T170C**	**T092B**		original / alternative
0.7	01.03 - 01.04	55	698	3	M 160.910	**T170C**	**T092B**		original / alternative
Crossblade (450)									
0.6	06.02 - 12.03	52	599	3	M 160.920	**T170C**	**T092B**		original / alternative
Fortwo Cabrio (450)									
0.7	01.04 - 01.07	45	698	3	M 160.910	**T170C**	**T092B**		original / alternative
0.7	01.04 - 01.07	55	698	3	M 160.910	**T170C**	**T092B**		original / alternative
1.0	01.07 -	52	999	3	M 132.910	**T170C**	**T092B**		original / alternative
1.0 Turbo	01.07 -	62	999	3	M 132.930	**T170C**	**T092B**		original / alternative
Fortwo Coupe (450)									
0.7	01.04 - 01.07	37	698	3	M 160.910	**T170C**	**T092B**		original / alternative
0.7	01.04 - 01.07	45	698	3	M 160.910	**T170C**	**T092B**		original / alternative
0.7	01.04 - 01.07	55	698	3	M 160.910	**T170C**	**T092B**		original / alternative
Fortwo Coupe (451)									
1.0	01.07 -	45	999	3	M 132.910	**T170C**	**T092B**		original / alternative
1.0	01.07 -	52	999	3	M 132.910	**T170C**	**T092B**		original / alternative
1.0 Turbo	01.07 -	62	999	3	M 132.930	**T170C**	**T092B**		original / alternative
Roadster (452)									
0.7	04.03 - 11.05	45	698	3	M 160.921	**T170C**	**T092B**		original / alternative
0.7	04.03 - 11.05	60	698	3	M 160.922	**T170C**	**T092B**		original / alternative
0.7 Brabus	12.03 - 11.05	74	698	3	M 160.923	**T170C**	**T092B**		original / alternative
Roadster Coupe (452)									
0.7	06.03 - 11.05	45	698	3		**T170C**	**T092B**		original / alternative
0.7	04.03 - 11.05	60	698	3		**T170C**	**T092B**		original / alternative
0.7 Brabus	12.03 - 11.05	74	698	3	M 160.923	**T170C**	**T092B**		original / alternative
SSANG YONG									
Korando (KJ)									
2.0	05.97 -	94	1998	4		**T743C**			semidirect
2.3	05.97 -	103	2295	4	M 111.970	**T743C**			semidirect
2.3	01.99 -	105	2295	4		**T743C**			semidirect
3.2	12.96 -	154	3199	6	M 104.995	**T623C**			semidirect
3.2	01.99 -	156	3199	6	M 104.995	**T623C**			semidirect
3.2	06.97 -	162	3199	6	M 104.992	**T623C**			semidirect
Korando Cabrio (KJ)									
2.3	11.97 -	103	2295	4		**T743C**			semidirect
2.3	02.99 -	105	2295	4		**T743C**			semidirect
3.2	01.99 -	156	3199	6	M 104.995	**T623C**			semidirect
3.2	06.97 -	162	3199	6	M 104.992	**T623C**			semidirect
Musso (FJ)									
2.0	10.96 -	93	1998	4	E20	**T743C**			semidirect
2.3	10.96 -	103	2295	4	M 111.970	**T743C**			semidirect
2.3	04.03 -	110	2295	4		**T743C**			semidirect
3.2	06.96 -	162	3199	6	M 104.992	**T623C**			semidirect
Rexton (GAB_)									
3.2	04.02 -	162	3199	6	G32D	**T623C**			semidirect
SUBARU									
Forester (SF)									
2.0	08.97 - 09.02	90	1994	4	EJ20	**T975B**			
2.0	06.98 - 09.02	92	1994	4	EJ20	**T180B**			
2.0 S Turbo	06.98 - 04.01	125	1994	4	EJ20	**T582B**			
Forester (SG)									
2.0	09.02 -	92	1994	4	EJ20	**T310B**			SAE
	09.02 -	92	1994	4	EJ20	**T579B**			DIN
2.0 X	09.05 -	116	1994	4	EJ204	**T310B**			
2.5	12.03 -	155	2457	4	EJ25	**T310B**			SAE
	12.03 -	155	2457	4	EJ25	**T579B**			DIN
Impreza Coupe (GFC)									
1.6	12.96 - 06.97	66	1597	4	EJ16E	**T975B**			
	07.97 - 12.00	66	1597	4	EJ16E	**T981B**			
1.6 4WD	12.96 - 06.97	66	1597	4	EJ161	**T975B**			
	07.97 - 12.00	66	1597	4	EJ161	**T981B**			
2.0	11.95 - 06.97	85	1994	4	EJ20E	**T975B**			
	07.97 - 07.98	85	1994	4	EJ20E	**T981B**			
	12.97 - 09.00	85	1994	4	EJ20E	**T581B**			
2.0 4WD	12.95 - 06.97	85	1994	4	EJ20	**T975B**			DIN
	12.97 - 12.00	85	1994	4	EJ20	**T581B**			SAE

SUBARU Impreza Coupe (GFC) ▶

model	year	kW	cm³	cyl	engine	I	II	III	info
Impreza Coupe (GFC)									
2.0 Turbo 4WD	12.96 - 06.98	155	1994	4	EJ20G	**T583B**			DIN
	07.98 - 12.00	155	1994	4	EJ20G	**T582B**			SAE
2.2	09.98 - 09.00	96	2212	4	EJ22E	**T581B**			
2.2 AWD	09.98 - 09.00	96	2212	4	EJ22E	**T581B**			
Impreza Sedan (GC)									
1.6 i	08.92 - 06.98	66	1597	4	EJ16	**T975B**			
	12.97 - 12.00	66	1597	4	EJ16	**T580B**			
1.6 i	06.98 - 12.00	70	1597	4	EJ161	**T580B**			
1.6 i 4WD	08.92 - 06.97	66	1597	4	EJ16	**T975B**			
	12.97 - 12.00	66	1597	4	EJ16	**T580B**			
1.6 i 4WD	06.98 - 12.00	70	1597	4	EJ161	**T580B**			
1.8	11.95 - 06.96	76	1820	4	EJ18E	**T975B**	**T981B**		boot design
1.8 i 4WD	08.92 - 12.00	76	1820	4	EJ18/EJ18E	**T975B**	**T981B**		boot design
2.0	09.98 - 09.00	92	1994	4	EJ201	**T581B**			
2.0 i 4WD	10.95 - 06.97	85	1994	4	EJ20	**T975B**			DIN
	12.97 - 12.00	85	1994	4	EJ20	**T581B**			SAE
2.0 i 4WD	06.98 - 12.00	92	1994	4	EJ20	**T581B**			
2.0 Turbo GT 4WD	03.94 - 06.98	155	1994	4	EJ20 (Turbo)	**T583B**			
	07.98 - 12.00	155	1994	4	EJ20 (Turbo)	**T582B**			
2.0 Turbo GT 4WD	06.98 - 12.00	160	1994	4	EJ205	**T582B**			
2.2 GX AWD	09.98 - 09.00	96	2212	4	EJ22E	**T581B**			
2.2 GX AWD	11.95 - 08.98	97	2212	4	EJ22	**T581B**			
Impreza Sedan (GD, GG)									
1.6 AWD	12.00 -	70	1597	4	EJ16	**T580B**			
2.0	12.00 -	92	1994	4	EJ20	**T310B**			SAE
	12.00 -	92	1994	4	EJ20	**T579B**			DIN
2.0 WRX Turbo	12.00 - 10.02	160	1994	4	EJ205	**T582B**			
2.0 WRX Turbo	12.02 -	165	1994	4	EJ205	**T582B**			
Impreza Station Wagon (GD, GG)									
1.6	12.00 -	70	1597	4	EJ16	**T580B**			
2.0	12.00 -	92	1994	4	EJ20	**T310B**			SAE
	12.00 -	92	1994	4	EJ20	**T579B**			DIN
2.0 Turbo	12.00 - 10.02	160	1994	4	EJ205	**T582B**			
2.0 WRX Turbo	12.02 -	165	1994	4	EJ205	**T582B**			
Impreza Station Wagon (GF)									
1.6	01.93 - 06.97	66	1597	4	EJ16E	**T975B**			
	12.97 - 08.98	66	1597	4	EJ16E	**T580B**			
1.6 i	06.98 - 12.00	70	1597	4	EJ161	**T580B**			
1.6 i 4WD	08.92 - 06.98	66	1597	4	EJ16	**T975B**			
	12.97 - 12.00	66	1597	4	EJ16	**T580B**			
1.6 i 4WD	06.98 - 12.00	70	1597	4	EJ161	**T580B**			
1.8	11.95 - 06.96	76	1820	4	EJ18E	**T975B**	**T981B**		boot design
1.8 i 4WD	08.92 - 12.00	76	1820	4	EJ18	**T975B**	**T981B**		boot design
2.0	09.96 - 06.97	85	1994	4	EJ20E	**T975B**			
	07.97 - 08.98	85	1994	4	EJ20E	**T981B**			
	12.97 - 08.98	85	1994	4	EJ20E	**T581B**			
2.0	09.98 - 09.00	92	1994	4	EJ201	**T581B**			
2.0 16V AWD	06.98 - 12.00	92	1994	4	EJ20	**T581B**			
2.0 4WD	12.95 - 06.97	85	1994	4	EJ20	**T975B**			
2.0 i Turbo 4WD	03.94 - 06.98	155	1994	4	EJ20 (Turbo)	**T583B**			
	07.98 - 12.00	155	1994	4	EJ20 (Turbo)	**T582B**			
2.0 Turbo GT 4WD	06.98 - 12.00	160	1994	4	EJ205	**T582B**			
2.2 GX AWD	09.98 - 09.00	96	2212	4	EJ22E	**T581B**			
2.2 GX AWD	11.95 - 08.98	97	2212	4	EJ22	**T581B**			
Justy I (KAD)									
1000	11.84 - 06.89	40	998	3	EF10	**T323B**			
1000	05.87 - 10.95	37	998	3	EF10	**T323B**			
1000 4WD	11.84 - 12.90	40	998	3	EF10	**T323B**			
1000 4WD	05.87 - 11.94	37	998	3	EF10	**T323B**			
1200	05.87 - 10.95	49	1190	3	EF12	**T323B**			
1200 4WD	10.86 - 12.90	50	1190	3	EF12	**T323B**			
1200 4WD	05.87 - 05.91	49	1190	3	EF12	**T323B**			
1200 4WD	10.90 - 12.94	55	1190	3	EF12	**T323B**			
Justy II (JMA, MS)									
1.3 4x4	04.01 - 11.03	63	1298	4	G13BB	**T967B**			semidirect
1.3 GX 4x4	10.95 - 11.03	50	1298	4	EF13	**T300B**			
Justy III (G3X)									
1.5	09.03 -	73	1490	4	M15A	**T994B**			semidirect
Legacy I (BC)									
1.6	05.89 - 12.93	70	1597	4	EJ16	**T850B**			

SUBARU Legacy I (BC) ▶

model	year	kW	cm³	cyl	engine	I	II	III	info
Legacy I (BC)									
1800 1.8	01.89 - 12.93	76	1820	4	EJ18 SPI	**T850B**			
1800 4WD 1.8	01.89 - 09.91	76	1820	4	EJ18 SPI	**T850B**			
2000 4WD 2.0	08.91 - 07.94	85	1994	4	EJ20 EMPI	**T913B**			
2000 Turbo 4WD 2.0	05.92 - 07.94	147	1994	4	EJ20-GN	**T913B**			
2200 4WD 2.2	01.89 - 07.94	100	2212	4	EJ22 EMPI	**T913B**			
Legacy I Station Wagon (BC, BJF)									
1.6 GL	05.89 - 12.93	70	1597	4	EJ16	**T850B**			
1800 1.8	01.89 - 07.94	76	1820	4	EJ18 SPI	**T850B**			
1800 4WD 1.8	01.89 - 07.94	76	1820	4	EJ18 SPI	**T850B**			
2000 2.0	09.91 - 12.93	85	1994	4	EJ20 EMPI	**T913B**			
2000 4WD	09.91 - 07.94	85	1994	4	EJ20 EMPI	**T913B**			
2000 Tur. Super 4WD	05.92 - 07.94	147	1994	4	EJ20-GN	**T913B**			
2200 Super 4WD 2.2	01.89 - 07.94	100	2212	4	EJ22 EMPI	**T913B**			
Legacy II (BD, BG)									
2.0 i	09.94 - 06.97	85	1994	4	EJ20E	**T975B**			
	07.97 - 03.99	85	1994	4	EJ20E	**T981B**			
2.0 i 4WD	09.94 - 06.97	85	1994	4	EJ20	**T975B**			
	07.97 - 03.99	85	1994	4	EJ20	**T981B**			
2.2 i 4WD	09.94 - 06.97	94	2212	4	EJ22 EMPI	**T975B**			
	07.97 - 03.99	94	2212	4	EJ22 EMPI	**T981B**			
2.2 i 4WD	06.96 - 06.97	96	2212	4	EJ22 EMPI	**T975B**			
	07.97 - 03.99	96	2212	4	EJ22 EMPI	**T981B**			
2.5 i 4WD	06.96 - 03.99	110	2457	4	EJ25D	**T583B**			
Legacy II Station Wagon (BD, BG)									
2.0 i	09.94 - 06.97	85	1994	4	EJ20 EMPI	**T975B**			
	07.97 - 11.98	85	1994	4	EJ20 EMPI	**T981B**			
2.0 i 4WD	09.94 - 06.97	85	1994	4	EJ20	**T975B**			
	07.97 - 11.98	85	1994	4	EJ20	**T981B**			
2.2 i 4WD	02.94 - 06.97	94	2212	4	EJ22 EMPI	**T975B**			
	07.97 - 12.98	94	2212	4	EJ22 EMPI	**T981B**			
2.2 i 4WD	06.96 - 06.97	96	2212	4	EJ22 EMPI	**T975B**			
	07.97 - 11.98	96	2212	4	EJ22 EMPI	**T981B**			
2.5 i 4WD	06.96 - 11.98	110	2457	4	EJ25D	**T583B**			
Legacy III (BE, BH)									
2.0	04.99 - 08.03	92	1994	4	EJ20	**T310B**			SAE
	04.99 - 08.03	92	1994	4	EJ20	**T579B**			DIN
2.5	10.98 - 08.03	115	2457	4	EJ25	**T310B**			SAE
	10.98 - 08.03	115	2457	4	EJ25	**T579B**			DIN
Legacy III Station Wagon (BE, BH)									
2.0	12.98 - 08.03	92	1994	4	EJ20	**T310B**			SAE
	12.98 - 08.03	92	1994	4	EJ20	**T579B**			DIN
2.5	12.98 - 08.03	115	2457	4	EJ25	**T310B**			SAE
	12.98 - 08.03	115	2457	4	EJ25	**T579B**			DIN
Legacy Lancaster (B12)									
2.5 4WD (GF-BH9)	06.98 - 04.01	123	2457	4	EJ253/EJ254	**T655B**			
2.5 4WD (TA-BH9)	05.01 - 05.03	125	2457	4	EJ253/EJ254	**T655B**			
Legacy IV, Legacy IV Station Wagon (B13_)									
2.0	09.03 -	101	1994	4	EJ20	**T580B**			
2.5	09.03 -	121	2457	4	EJ25	**T584B**			
Leone II									
1.6	06.85 - 07.90	52	1595	4	EA71	**T850B**			
1600	11.84 - 09.91	55	1595	4	EA71	**T850B**			
1.8 Turbo AWD	06.85 - 07.86	100	1781	4	EA82	**T407B**			
1800 4WD	11.84 - 12.90	66	1781	4	EA82	**T407B**			
1800 4WD	01.88 - 12.90	88	1782	4	EA82	**T407B**			
1800 Turbo 4WD	03.89 - 12.90	96	1782	4	EA82	**T407B**			
Leone II Station Wagon									
1800 4WD	11.84 - 12.90	66	1781	4	EA82	**T407B**			
1800 4WD	01.88 - 12.90	88	1782	4	EA82	**T407B**			
1800 Super 4WD	03.89 - 12.90	96	1781	4	EA82	**T407B**			
1800 Super 4WD cat	07.86 - 02.92	70	1781	4	EA82	**T407B**			
1800 Super Tur. 4WD	11.84 - 12.90	100	1781	4	EA82	**T407B**			
Leone Bus (E10, E12)									
1.0 4WD	01.83 - 12.87	37	998	3	EF10	**T851B**			
1.2 4WD	08.86 - 02.00	38	1190	3	EF12	**T851B**			
1.2 i 4WD	08.91 - 02.00	40	1189	3	EF12	**T852B**			
Outback (BE, BH)									
2.5	10.00 - 08.03	115	2457	4	EJ25	**T310B**			SAE
	10.00 - 08.03	115	2457	4	EJ25	**T579B**			DIN

SUBARU Outback (BL, BP) ▶

model	year	kW	cm³	cyl	engine	I	II	III	info
Outback (BL, BP)									
2.5	11.03 - 09.09	121	2457	4	EJ25D	**T584B**			
2.5	09.08 - 09.09	127	2457	4	EJ251	**T310B**			
XT Coupe (XT)									
1.8 Turbo	11.85 - 07.90	100	1781	4	EA82	**T324B**			
1.8 Turbo 4WD	01.88 - 12.90	88	1782	4	EA82	**T324B**			
1.8 Turbo 4WD	01.87 - 12.90	96	1782	4	EA82	**T324B**			
1.8 Turbo 4WD	11.84 - 12.90	100	1782	4	EA82	**T324B**			
SUZUKI									
Alto I, II									
0.8	10.83 - 12.85	29	797	4	F8A	**T325B**			
0.8	06.82 - 12.85	29	796	3	F8B	**T325B**			
0.8	01.86 - 11.93	29	796	3	F8B	**T325B**			
Alto III (EF)									
1.0	09.94 - 06.02	39	993	4	G10BB	**T844B**			
1.0	01.00 - 06.02	43	993	4	G10BB	**T844B**			
Alto IV (FF)									
1.1	06.02 - 12.08	46	1061	4	F10DN/F10D	**T967B**			semidirect
Baleno (EG)									
1.3	09.96 - 01.99	52	1298	4	G13BA	**T585B**			without distributor
	09.96 - 01.99	52	1298	4	G13BA	**T735B**			with distributor
	02.99 - 05.02	52	1298	4	G13BA	**T967B**			semidirect
1.3 i 16V	07.95 - 01.99	63	1298	4	G13BB	**T585B**			without distributor
	07.95 - 01.99	63	1298	4	G13BB	**T735B**			with distributor
	02.99 - 05.02	63	1298	4	G13BB	**T967B**			semidirect
1.6 i 16V	07.95 - 01.99	72	1590	4	G16B	**T585B**			without distributor
	07.95 - 01.99	72	1590	4	G16B	**T735B**			with distributor
	02.99 - 05.02	72	1590	4	G16B	**T967B**			semidirect
1.6 i 16V 4x4	07.95 - 01.99	72	1590	4	G16B	**T585B**			without distributor
	07.95 - 01.99	72	1590	4	G16B	**T735B**			with distributor
	02.99 - 05.02	72	1590	4	G16B	**T967B**			semidirect
Baleno CC (EG)									
1.3	09.96 - 05.02	52	1298	4	G13BA	**T735B**			with distributor
	09.96 - 05.02	52	1298	4	G13BA	**T967B**			semidirect
1.3 i 16V	07.95 - 01.99	63	1298	4	G13BB	**T585B**			without distributor
	07.95 - 01.99	63	1298	4	G13BB	**T735B**			with distributor
	02.99 - 05.02	63	1298	4	G13BB	**T967B**			semidirect
1.6 i 16V	07.95 - 01.99	72	1590	4	G16B	**T585B**			without distributor
	07.95 - 01.99	72	1590	4	G16B	**T735B**			with distributor
	02.99 - 05.02	72	1590	4	G16B	**T967B**			semidirect
1.6 i 16V 4x4	07.95 - 01.99	72	1590	4	G16B	**T585B**			without distributor
	07.95 - 01.99	72	1590	4	G16B	**T735B**			with distributor
	02.99 - 05.02	72	1590	4	G16B	**T967B**			semidirect
Baleno Combi (EG)									
1.3 16V	03.97 - 01.99	63	1298	4	G13BB	**T585B**			without distributor
	03.97 - 01.99	63	1298	4	G13BB	**T735B**			with distributor
	02.99 - 05.02	63	1298	4	G13BB	**T967B**			semidirect
1.6 i 16V	08.96 - 01.99	72	1590	4	G16B	**T585B**			without distributor
	08.96 - 01.99	72	1590	4	G16B	**T735B**			with distributor
	02.99 - 05.02	72	1590	4	G16B	**T967B**			semidirect
1.6 i 16V	02.99 - 05.02	73	1590	4		**T967B**			semidirect
1.6 i 16V 4x4	08.96 - 01.99	72	1590	4	G16B	**T585B**			without distributor
	08.96 - 01.99	72	1590	4	G16B	**T735B**			with distributor
	02.99 - 05.02	72	1590	4	G16B	**T967B**			semidirect
1.6 i 16V 4x4	02.99 - 05.02	73	1590	4	G16B	**T967B**			semidirect
Carry Van (FD)									
1.3	03.99 -	58	1298	4	G13BB	**T967B**			semidirect
1.3 16 V	03.00 -	58	1298	4	G13BB	**T967B**			semidirect
Grand Vitara I (FT, GT)									
1.6	03.98 - 07.03	69	1590	4	G16B	**T967B**			semidirect
Grand Vitara II (JT)									
1.6 Allrad	04.05 -	78	1586	4	M16A	**T994B**			semidirect
Ignis (FH)									
1.3	10.00 - 09.03	61	1328	4	M13A	**T994B**			semidirect
1.3 4WD	10.00 - 09.03	61	1328	4	M13A	**T994B**			semidirect
Ignis II									
1.3	09.03 -	69	1328	4	M13A	**T994B**			semidirect
1.3 4x4	09.03 -	69	1328	4	M13A	**T994B**			semidirect
1.5	09.03 -	73	1490	4	M15A	**T994B**			semidirect
1.5 4x4	09.03 -	73	1490	4	M15A	**T994B**			semidirect

SUZUKI Ignis II ▶

model	year	kW	cm³	cyl	engine	I	II	III	info
Ignis II									
1.5 Sport	12.03 -	80	1490	4	M15A	**T994B**			semidirect
Jimny (FJ)									
1.3 16V	09.98 -	59	1298	4	G13BB	**T967B**			semidirect
1.3 16V	02.01 -	60	1328	4	M13A	**T994B**			semidirect
1.3 16V 4WD	09.98 -	59	1298	4	G13BB	**T967B**			semidirect
1.3 16V 4WD	02.01 -	60	1328	4	M13A	**T994B**			semidirect
1.3 16V 4x4	08.05 -	63	1328	4	M13A	**T994B**			semidirect
1.3 4WD	05.14 -	62	1328	4	M13A	**T994B**			
Liana (ER)									
1.3	03.02 -	66	1328	4	M13A	**T994B**			semidirect
1.6	03.02 -	76	1586	4	M16A	**T994B**			semidirect
1.6	01.05 -	79	1586	4	M16A	**T994B**			semidirect
1.6 4WD	03.02 -	76	1586	4	M16A	**T994B**			semidirect
1.6 4WD	04.02 -	78	1586	4	M16A	**T994B**			semidirect
1.6 4WD	01.05 -	79	1586	4	M16A	**T994B**			semidirect
1.6 i	04.02 -	78	1586	4	M16A	**T994B**			semidirect
Liana Combi (ER)									
1.3	07.01 - 12.07	66	1328	4	M13A	**T994B**			semidirect
1.6	07.01 - 12.07	76	1586	4	M16A	**T994B**			semidirect
1.6 4WD	07.01 - 12.07	76	1586	4	M16A	**T994B**			semidirect
1.6 4WD	04.02 - 12.07	78	1586	4	M16A	**T994B**			semidirect
1.6 4WD	01.05 - 12.07	79	1586	4	M16A	**T994B**			semidirect
1.6 i	04.02 - 12.07	78	1586	4	M16A	**T994B**			semidirect
Samurai (SJ)									
1.0 Allrad	11.88 - 12.04	33	970	4	F10A	**T326B**			
1.3	11.88 - 12.04	44	1324	4	G13A	**T327B**			
1.3	11.88 - 12.04	47	1324	4	G13A	**T327B**			
1.3 Allrad	11.88 - 12.04	51	1298	4	G13BA	**T602B**			
1.3 Allrad	01.00 - 12.04	59	1298	4	G13BA	**T327B**			
SJ 410									
1.0	09.81 - 12.88	33	970	4	F10A	**T328B**			
1.0 Cabrio	09.81 - 12.88	33	970	4	F10A	**T328B**			
SJ 413									
1.3	08.86 - 08.90	44	1324	4	G13A	**T328B**			
1.3	09.84 - 12.88	47	1324	4	G13A	**T328B**			
Super Carry Bus (ED)									
1.0	10.92 - 03.99	31	970	4	F10A	**T456B**			
1.0	09.94 - 03.99	30	970	4	F10A	**T456B**			
1.0	10.85 - 03.99	33	970	4	F10A	**T456B**			
Swift Cabriolet (SF413)									
1.3 i	09.91 - 10.96	50	1298	4	G13BA	**T844B**			
Swift I (AA)									
1.0	10.83 - 03.89	37	993	3	G10A /G10	**T970B**			
1.3	10.84 - 03.89	50	1324	4	G13A	**T328B**			
1.3	10.84 - 03.89	54	1324	4	G13A	**T423B**			
1.3	08.86 - 03.89	47	1324	4	G13A	**T328B**			
1.3 GTi/Gxi	08.85 - 03.89	74	1298	4	G13B	**T957B**			
Swift II CC (EA, MA)									
1.0	03.89 - 05.01	37	993	3	G10A	**T970B**			
1.0 i	09.91 - 05.01	39	993	3	G10A	**T970B**			
1.0 i	03.89 - 12.91	40	993	3	G10A	**T970B**			
1.3	03.89 - 05.01	50	1298	4	G13A	**T844B**			
1.3	03.89 - 12.91	52	1324	4	G13A	**T844B**	**T423B**		boot design
1.3 4WD	03.89 - 05.01	50	1324	4	G13A	**T844B**			
1.3 4WD	10.89 - 12.91	52	1324	4	G13A	**T844B**			
1.3 GTi	03.89 - 05.01	74	1298	4	G13B	**T957B**			
Swift II Sedan (AH, AJ)									
1.3	03.89 - 05.01	50	1324	4	G13A	**T844B**	**T423B**		boot design
1.3	03.89 - 12.91	52	1324	4	G13A	**T844B**	**T957B**		boot design
1.6	11.89 - 12.91	70	1590	4	G16B	**T735B**			
1.6 4WD	11.89 - 12.91	70	1590	4	G16B	**T735B**			
1.6 i	01.90 - 05.01	68	1590	4	G16B	**T735B**			
1.6 i 4WD	01.90 - 05.01	68	1590	4	G16B	**T735B**			
Swift III (MZ, EZ)									
1.3	02.05 -	68	1328	4	M13A	**T994B**			semidirect
1.3 4x4	01.06 -	66	1328	4	M13A	**T994B**			semidirect
1.3 4x4	02.05 -	68	1328	4	M13A	**T994B**			semidirect
1.5	02.05 -	75	1490	4	M15A	**T994B**			semidirect
1.5 4x4	02.05 -	74	1490	4	M15A	**T994B**			semidirect
1.6	05.06 -	92	1586	4	M16A	**T994B**			semidirect

SUZUKI SX4 (GY) ▶

model	year	kW	cm³	cyl	engine	I	II	III	info
SX4 (GY)									
1.5	06.06 -	73	1490	4	M15A	**T994B**			semidirect
1.5 VVT	07.10 -	82	1490	4	M15A	**T994B**			semidirect
1.5 VVT 4x4	07.10 -	82	1490	4	M15A	**T994B**			semidirect
1.6 VVT	06.06 -	79	1586	4	M16A	**T994B**			semidirect
1.6 VVT	07.09 -	88	1586	4	M16A	**T994B**			semidirect
1.6 VVT 4x4	07.09 -	82	1586	4	M16A	**T994B**			semidirect
1.6 VVT 4x4	06.06 -	79	1586	4	M16A	**T994B**			semidirect
1.6 VVT 4x4	07.09 -	88	1586	4	M16A	**T994B**			semidirect
SX4 Sedan (GY)									
1.6	10.07 -	79	1586	4	M16A	**T994B**			semidirect
1.6 AWD	10.07 -	88	1586	4	M16A	**T994B**			semidirect
Vitara (ET, TA)									
1.6 (TA)	07.88 - 03.98	59	1589	4	G16A (8V)	**T602B**	**T644B**		boot design
1.6 (ET)	07.88 - 12.91	60	1589	4	G16A (8V)	**T602B**	**T644B**		boot design
1.6 i 16V	07.90 - 03.98	71	1589	4	G16B	**T644B**			
Vitara Cabrio (ET, TA)									
1.6	07.88 - 01.95	59	1589	4	G16A (8V)	**T602B**	**T644B**		boot design
1.6 i 16V	07.90 - 03.99	71	1589	4	G16B	**T644B**			
Wagon R+ (EM)									
1.0	02.98 - 05.00	48	996	4	K10A	**T512B**			
1.2	02.98 - 05.00	51	1171	4	K12A	**T512B**			
1.2 4WD	02.98 - 05.00	51	1171	4		**T512B**			
Wagon R+ (MM)									
1.3	05.00 -	56	1298	4	G13BB	**T967B**			semidirect
1.3	09.03 -	69	1328	4	M13A	**T994B**			semidirect
1.3 4WD	10.01 -	56	1298	4	G13BB	**T967B**			semidirect
1.3 4WD	09.03 -	69	1328	4	M13A	**T994B**			semidirect
X-90 (EL)									
1.6 i 16V	09.95 - 12.97	71	1590	4	G16B	**T585B**			
1.6 i 16V 4x4	09.95 - 12.97	71	1590	4	G16B	**T585B**			
TAGAZ (VORTEX)									
Road Partner									
2.3 4x4	01.08 - 01.14	110	2295	4	M161 (E23)	**T743C**			semidirect
3.2 4x4	01.08 - 01.14	162	3199	6	M162 (E32)	**T623C**			semidirect
Tager									
2.3, 2.3 4x4	10.08 - 01.14	110	2295	4	M161 (E23)	**T743C**			semidirect
3.2 4x4	10.08 - 01.14	162	3199	6	M162 (E32)	**T623C**			semidirect
Vortex Corda									
1.5	03.10 - 08.12	81	1497	4	SQR477F	**T360B**			
Vortex Estina									
1.6	01.09 - 09.12	87	1597	4	SQR481F	**T314B**			
Vortex Estina FL-C									
1.5i 16V	09.12 - 01.14	80	1497	4	SQR477F	**T360B**			
2.0i 16V	09.12 - 01.14	95	1971	4	SQR484	**T314B**			
Vortex Tingo									
1.8i 16V	07.10 - 05.12	97	1845	4	SQR481FC	**T360B**[1)]	**T314B**[2)]		s. plug boot: length 150[1)]/125[2)] mm
Vortex Tingo FL									
1.8i 16V	05.12 - 01.14	97	1845	4	SQR481FC	**T360B**[1)]	**T314B**[2)]		s. plug boot: length 150[1)]/125[2)] mm
TATRA									
T 613									
3.5	73 - 96	121	3500	8	613-4, 613-E1	**T154G**			
TOYOTA									
4 Runner (RN10_, VZN13_, VZN10_, RN13_)									
2.4	08.87 - 03.96	82	2366	4	22REC	**T637B**			
2.7 i	11.95 - 03.96	112	2694	4	3RZ-FE	**T588P**			
3.0 V6	08.91 - 11.95	105	2959	6	3VZ-E	**T640P**			
3.4 i	11.95 - 03.96	136	3378	6	5VZ-FE	**T587P**			semidirect
Avensis (_T22_), Avensis Liftback (_T22_)									
1.6	09.97 - 10.00	74	1587	4	4A-FE	**T746P**			5 mm cable-DIN
	09.97 - 10.00	74	1587	4	4A-FE	**T924B**			PIN, with distributor
	09.97 - 10.00	74	1587	4	4A-FE	**T518B**			PIN, without distributor
1.6	09.97 - 10.00	81	1587	4	4A-FE	**T746P**			5 mm cable-DIN
	09.97 - 10.00	81	1587	4	4A-FE	**T924B**			PIN, with distributor
	09.97 - 10.00	81	1587	4	4A-FE	**T518B**			PIN, without distributor
1.8	09.97 - 10.00	81	1762	4	7A-FE	**T518B**			
1.8 VVT-i	10.00 - 02.03	95	1794	4	1ZZ-FE	**T613P**			
2.0	09.97 - 10.00	94	1998	4	3S-FE	**T927P**			

TOYOTA Avensis Station Wagon (_T22_) ▶

model	year	kW	cm³	cyl	engine	I	II	III	info
Avensis Station Wagon (_T22_)									
1.6	09.97 - 10.00	74	1587	4	4A-FE	**T746P**			DIN
	09.97 - 10.00	74	1587	4	4A-FE	**T924B**			PIN, with distributor
	09.97 - 10.00	74	1587	4	4A-FE	**T518B**			PIN, without distributor
1.6	09.97 - 10.00	81	1587	4	4A-FE	**T746P**			DIN
	09.97 - 10.00	81	1587	4	4A-FE	**T924B**			PIN, with distributor
	09.97 - 10.00	81	1587	4	4A-FE	**T518B**			PIN, without distributor
1.8	09.97 - 10.00	81	1762	4	7A-FE	**T518B**			
1.8 VVT-i	10.00 - 02.03	95	1794	4	1ZZ-FE	**T613P**			
2.0	09.97 - 10.00	94	1998	4	3S-FE	**T927P**			
Camry (_CV1_, _XV1_, _V1_)									
2.2	06.91 - 08.96	100	2164	4	5S-FE	**T983P**			
3.0	06.91 - 08.96	138	2959	6	3VZ-FE	**T522P**			
Camry (_CV2_, _XV2_)									
2.2	11.00 - 11.01	93	2164	4	5S-FE	**T927P**			
2.2 (SXV20_)	08.96 - 11.01	96	2164	4	5S-FE	**T927P**			
3.0	08.96 - 11.01	135	2995	6	1MZ-FE	**T978P**			semidirect
3.0	08.96 - 11.01	140	2995	6	1MZ-FE	**T978P**			semidirect
3.0 Combi	08.96 - 07.01	140	2995	6	1MZ-FE	**T978P**			semidirect
3.0	08.96 - 11.01	142	2995	6	1MZ-FE	**T978P**			semidirect
Camry Solara (MCV2_, SXV2_)									
2.2 Cabrio	02.00 - 11.02	98	2164	4	5S-FE	**T927P**			
2.2 Coupe	06.98 - 06.01	98	2164	4	5S-FE	**T927P**			
3.0 Coupe	06.98 - 06.01	140	2995	6	1MZ-FE	**T978P**			semidirect
3.0 Coupe	06.98 - 06.01	147	2995	6	1MZ-FE	**T978P**			semidirect
3.0 Cabrio	02.00 - 11.02	140	2995	6	1MZ-FE	**T978P**			semidirect
3.0 Cabrio	02.00 - 11.02	147	2995	6	1MZ-FE	**T978P**			semidirect
Camry Station Wagon (_XV1_, _CV1_, _V10)									
2.2	03.92 - 07.96	100	2164	4	5S-FE	**T983P**			
3.0	03.92 - 07.96	138	2959	6	3VZ-FE	**T522P**			
Carina II, Carina II Sedan (_T15_)									
1.6	10.83 - 11.87	55	1587	4	4A-LC	**T611B**			
1.6	10.83 - 11.87	62	1588	4	4A-L	**T611B**			
1.6	10.86 - 11.87	63	1588	4	4A-L	**T611B**			
1.6	12.87 - 11.89	66	1587	4	4A-F	**T521B**			
1.6	12.87 - 03.92	72	1587	4	4A-FE	**T520B**			with distributor
	12.87 - 03.92	72	1587	4	4A-FE	**T521B**			without distributor
1.6	12.87 - 03.92	75	1587	4	4A-FE	**T520B**			with distributor
	12.87 - 03.92	75	1587	4	4A-FE	**T521B**			without distributor
Carina II Station Wagon (_T17_)									
1.6	12.87 - 12.89	66	1587	4	4A-F	**T521B**			
1.6	12.87 - 03.92	72	1587	4	4A-FE	**T520B**			with distributor
	12.87 - 03.92	72	1587	4	4A-FE	**T521B**			without distributor
1.6	12.87 - 03.92	75	1587	4	4A-FE	**T520B**			with distributor
	12.87 - 03.92	75	1587	4	4A-FE	**T521B**			without distributor
Carina E (_T19_)									
1.6	12.93 - 09.97	73	1587	4	4A-FE	**T746P**	**T793P**		without / with 5mm coil cable
	12.93 - 09.97	73	1587	4	4A-FE	**T924B**			with 7 mm coil cable
1.6	12.93 - 09.97	85	1587	4	4A-FE	**T746P**	**T793P**		without / with 5mm coil cable
	12.93 - 09.97	85	1587	4	4A-FE	**T924B**			with 7 mm coil cable
1.6 16V	10.95 - 09.97	78	1587	4	4A-FE	**T746P**	**T793P**		without / with 5mm coil cable
	10.95 - 09.97	78	1587	4	4A-FE	**T924B**			with 7 mm coil cable
1.6 GLI	04.92 - 09.97	79	1587	4	4A-FE	**T746P**	**T793P**		without / with 5mm coil cable
	04.92 - 09.97	79	1587	4	4A-FE	**T924B**			with 7 mm coil cable
1.8	01.95 - 09.97	79	1762	4	7A-FE	**T924B**			
2.0 GLI	04.92 - 09.97	98	1998	4	3S-FE	**T983P**			
2.0 GTi	04.92 - 02.94	116	1998	4	3S-GE	**T983P**			
2.0 GTi 16V	03.94 - 09.97	129	1998	4	3S-GE	**T983P**			
2.0 i	12.93 - 09.97	93	1998	4	3S-FE	**T983P**			
Carina E Sedan (_T19_)									
1.6	01.95 - 09.97	73	1587	4	4A-FE	**T746P**	**T793P**		without / with 5mm coil cable
	01.95 - 09.97	73	1587	4	4A-FE	**T924B**			with 7 mm coil cable
1.6	01.93 - 09.97	79	1587	4	4A-FE	**T746P**	**T793P**		without / with 5mm coil cable
	01.93 - 09.97	79	1587	4	4A-FE	**T924B**			with 7 mm coil cable
1.6	10.95 - 09.97	78	1587	4	4A-FE	**T746P**	**T793P**		without / with 5mm coil cable
	10.95 - 09.97	78	1587	4	4A-FE	**T924B**			with 7 mm coil cable
1.6 16V	12.94 - 09.97	85	1587	4	4A-FE	**T746P**	**T793P**		without / with 5mm coil cable
	12.94 - 09.97	85	1587	4	4A-FE	**T924B**			with 7 mm coil cable
1.8 i 16V	01.95 - 09.97	79	1762	4	7A-FE	**T924B**			
2.0 (ST191)	01.93 - 09.97	98	1998	4	3S-FE	**T983P**			
2.0 GTi	04.92 - 02.94	116	1998	4	3S-GE	**T983P**			

TOYOTA Carina E Sedan (_T19_) ▶

model	year	kW	cm³	cyl	engine	I	II	III	info
Carina E Sedan (_T19_)									
2.0 GTi 16V	03.94 - 09.97	129	1998	4	3S-GE	**T983P**			
2.0 i	12.92 - 09.97	93	1998	4	3S-FE	**T983P**			
Carina E Sportswagon (_T19_)									
1.6	04.92 - 09.97	85	1587	4	4A-FE	**T746P**	**T793P**		without / with 5mm coil cable
	04.92 - 09.97	85	1587	4	4A-FE	**T924B**			with 7 mm coil cable
1.6 GLI	01.93 - 09.97	79	1587	4	4A-FE	**T746P**	**T793P**		without / with 5mm coil cable
	01.93 - 09.97	79	1587	4	4A-FE	**T924B**			with 7 mm coil cable
1.6 i	02.95 - 09.97	73	1587	4	4A-FE	**T746P**	**T793P**		without / with 5mm coil cable
	02.95 - 09.97	73	1587	4	4A-FE	**T924B**			with 7 mm coil cable
1.8 i	02.95 - 09.97	79	1762	4	7A-FE	**T924B**			
2.0 GLI	01.93 - 09.97	98	1998	4	3S-FE	**T983P**			
2.0 i	05.95 - 09.97	93	1998	4	3S-FE	**T983P**			
Celica (AT16_, ST16_)									
1.6	04.86 - 08.89	63	1588	4	4A-L	**T611B**			
1.6 GT 16V	04.86 - 08.89	91	1587	4	4A-GEL	**T149B**			
Celica (ST20_, AT20_)									
1.8 i 16V	11.93 - 11.99	85	1762	4	7A-FE	**T746P**			
2.0 i 16V	04.96 - 11.99	125	1998	4	3S-GE	**T182P**			
2.0 i 16V	11.93 - 11.99	129	1998	4	3S-GE	**T182P**			
2.2 GT	11.93 - 08.99	100	2164	4	5S-FE	**T983P**			
Celica (ZZT23_)									
1.8 16V VT-i	08.99 - 07.05	105	1794	4	1ZZ-FE	**T613P**			
1.8 16V TS	08.99 - 09.05	141	1796	4	2ZZ-GE	**T613P**			
Celica Cabriolet (AT18_, ST18_)									
2.0 GTi	10.89 - 11.93	115	1998	4	3S-GE	**T402P**			
Celica Cabriolet (AT20_, ST20_)									
2.0 i 16V	11.93 - 08.99	125	1998	4	3S-GE	**T182P**			
Celica Coupe									
1.6 ST	08.77 - 07.81	63	1588	4	2TB/4A-L	**T611B**			
2.0 Turbo 4WD	03.88 - 08.89	136	1998	4	3S-GTE	**T540B**			
Celica Coupe (AT18_, ST18_)									
1.6 STI	10.89 - 11.93	77	1587	4	4A-FE	**T521B**			
2.0 GTi	09.91 - 11.93	115	1998	4	3S-GE	**T402P**			5 mm cable
	09.91 - 11.93	115	1998	4	3S-GE	**T638B**			7 mm cable
2.0 Turbo 4WD	10.89 - 11.93	150	1998	4	3S-GTE	**T402P**			5 mm cable
	10.89 - 11.93	150	1998	4	3S-GTE	**T540B**			7 mm cable
2.0 Turbo 4WD	10.89 - 11.93	153	1998	4	3S-GTE	**T402P**			5 mm cable
	10.89 - 11.93	153	1998	4	3S-GTE	**T540B**			7 mm cable
2.2	10.89 - 10.93	100	2164	4	5S-FE	**T984P**			with distributor
	10.89 - 10.93	100	2164	4	5S-FE	**T983P**			without distributor
Celica Liftback (ST16_, AT16_)									
1.6	04.86 - 08.89	63	1588	4	4A-L	**T611B**			
1.6 GT	08.87 - 08.89	85	1587	4	4A-GELC	**T149B**			
1.6 GT 16V	09.85 - 08.89	91	1587	4	4A-GEL	**T149B**			
Corolla (_E8_)									
1.3	06.83 - 10.84	51	1296	4	2A-L	**T612B**			
1.3	10.84 - 08.87	55	1295	4	2E-LC/2E-L	**T966B**			
Corolla (_E9_)									
1.3 i	08.87 - 12.92	55	1296	4	2E-E/2E	**T966B**			
1.6	08.87 - 12.89	66	1587	4	4A-F	**T521B**			
1.6 GL 4WD	10.87 - 08.90	70	1587	4	4A-F	**T521B**			
1.6 i	11.89 - 06.93	77	1587	4	4A-FE	**T521B**			
1.6 i 4WD	10.87 - 08.90	77	1587	4	4A-FE	**T521B**			
1.6 XL	09.89 - 04.92	70	1587	4	4A-F	**T521B**			
Corolla (_E10_)									
1.3 12V	07.92 - 04.97	53	1296	4	2E	**T616P**			
1.3 XLI	09.95 - 04.97	55	1332	4	4E-FE	**T968P**			
1.3 XLI 16V	07.92 - 09.95	65	1332	4	4E-FE	**T968P**			
1.6 Si	09.95 - 04.97	84	1587	4	4A-FE	**T746P**			
Corolla (_E11_)									
1.4	04.97 - 02.00	63	1332	4	4E-FE	**T926P**			
1.6	04.97 - 02.00	81	1587	4	4A-FE	**T746P**			
1.6 Aut	04.97 - 02.00	79	1587	4	4A-FE	**T746P**			
Corolla Compact (_E9_)									
1.3	08.87 - 12.89	55	1296	4	2E	**T966B**			
1.6	08.87 - 04.92	66	1587	4	4A-F	**T521B**			
1.6 GL 4WD	10.87 - 08.90	70	1587	4	4A-F	**T521B**			
1.6 GTi	08.87 - 04.92	85	1587	4	4A-GE	**T149B**			
1.6 i	08.89 - 04.92	77	1587	4	4A-FE	**T521B**			
1.6 XL	09.89 - 04.92	70	1587	4	4A-F	**T521B**			

TOYOTA Corolla Compact (_E10_) ▶

model	year	kW	cm³	cyl	engine	I	II	III	info
Corolla Compact (_E10_)									
1.3 12V	07.92 - 05.95	53	1296	4	2E	**T616P**			
1.3 XLI	09.95 - 04.97	55	1332	4	4E-FE	**T968P**			
1.3 XLI	07.92 - 09.95	65	1332	4	4E-FE	**T968P**			
1.6 Si	07.92 - 04.97	84	1587	4	4A-FE	**T746P**			
1.8 GT	11.92 - 05.95	86	1762	4	7A-FE	**T746P**			
1.8 GTi 4WD	05.92 - 07.95	92	1762	4	7A-FE	**T746P**			
Corolla Compact (_E11_)									
1.4	04.97 - 02.00	63	1332	4	4E-FE	**T926P**			
1.6	04.97 - 02.00	81	1587	4	4A-FE	**T746P**			
1.6 Aut	04.97 - 02.00	79	1587	4	4A-FE	**T746P**			
Corolla Coupe (AE86)									
1.6 16V	12.85 - 04.87	85	1587	4	4A-GEC	**T149B**			
1.6 GT 16V	08.83 - 07.87	91	1587	4	4A-GE	**T149B**			
Corolla FX Compact (E8B)									
1.3	08.85 - 08.87	55	1295	4	2E-L	**T966B**			
1.6 GT 16V	08.85 - 08.87	89	1587	4	4A-GEL	**T149B**			
Corolla Liftback (_E8_)									
1.3	06.83 - 09.84	51	1296	4	2A-L	**T612B**			
1.3	01.85 - 08.87	55	1296	4	2E-LC/2E-L	**T966B**			
Corolla Liftback (_E9_)									
1.3 i	08.87 - 04.92	55	1296	4	2E-E/2E	**T966B**			
1.6	08.87 - 04.92	66	1587	4	4A-F	**T521B**			
1.6	08.87 - 04.92	70	1587	4	4A-F	**T521B**			
1.6	08.89 - 04.92	77	1587	4	4A-FE	**T521B**			
1.6 4WD	09.89 - 05.92	77	1587	4	4A-FE	**T521B**			
1.6 GTI	07.87 - 06.93	92	1587	4	4A-GE	**T149B**			
Corolla Liftback (_E10_)									
1.3 12V	07.92 - 05.95	53	1296	4	2E	**T616P**			
1.3 XLI	07.92 - 04.97	65	1332	4	4E-FE	**T968P**			
1.6 GLI	07.92 - 04.97	84	1587	4	4A-FE	**T746P**			
1.8 GT	11.92 - 05.95	86	1762	4	7A-FE	**T746P**			
1.8 GTi 4WD	05.92 - 07.95	92	1762	4	7A-FE	**T746P**			
Corolla Liftback (_E11_)									
1.4	04.97 - 02.00	63	1332	4	4E-FE	**T926P**			
1.6	04.97 - 02.00	81	1587	4	4A-FE	**T746P**			
1.6 Aut	04.97 - 02.00	79	1587	4	4A-FE	**T746P**			
Corolla Station Wagon (_E9_)									
1.3	12.87 - 12.89	55	1296	4	2E	**T966B**			
1.3 i	06.89 - 06.92	55	1296	4	2E-E	**T966B**			
1.6	02.88 - 05.92	66	1587	4	4A-F	**T521B**			
1.6	12.87 - 04.92	70	1587	4	4A-F	**T521B**			
1.6 XLI	11.89 - 06.92	77	1587	4	4A-FE	**T521B**			
1.6 XLI 4WD	08.88 - 06.92	77	1587	4	4A-FE	**T521B**			
Corolla Wagon (_E10_)									
1.3 12V	07.92 - 05.95	53	1296	4	2E	**T616P**			
1.3 XLI	09.95 - 04.97	55	1332	4	4E-FE	**T968P**			
1.3 XLI 16V	07.92 - 09.95	65	1332	4	4E-FE	**T968P**			
1.6 Si	07.92 - 04.97	84	1587	4	4A-FE	**T746P**			
1.8 16V 4WD	09.95 - 04.97	81	1762	4	7A-FE	**T746P**			
Corolla Wagon (__E11_)									
1.4	04.97 - 02.00	63	1332	4	4E-FE	**T926P**			
1.6	04.97 - 02.00	81	1587	4	4A-FE	**T746P**			
1.6 Aut	04.97 - 02.00	79	1587	4	4A-FE	**T746P**			
Hiace III Van (H50)									
2.0	02.90 - 08.95	74	1998	4	1RZ	**T617B**			7 mm cable
	02.90 - 08.95	74	1998	4	1RZ	**T618P**			5 mm cable
2.4	08.89 - 08.95	88	2438	4	2RZ-E	**T618P**			
2.4 4WD	08.89 - 08.95	88	2438	4	2RZ-E	**T618P**			
Hiace III Wagon (LH1_, RZH1_)									
2.0	08.89 - 08.95	74	1998	4	1RZ	**T617B**			7 mm cable
	08.89 - 08.95	74	1998	4	1RZ	**T618P**			5 mm cable
2.4	08.89 - 08.95	88	2438	4	2RZ-E	**T617B**			7 mm cable
	08.89 - 08.95	88	2438	4	2RZ-E	**T618P**			5 mm cable
2.4 4WD	08.89 - 08.95	88	2438	4	2RZ-E	**T617B**			7 mm cable
	08.89 - 08.95	88	2438	4	2RZ-E	**T618P**			5 mm cable
Hiace IV Bus									
2.4	08.95 - 04.98	85	2438	4	2RZ-E	**T618P**			
2.4 4WD	08.95 - 04.98	85	2438	4	2RZ-E	**T618P**			
2.7	04.98 - 08.01	105	2694	4	3RZ-FE	**T399P**			
2.7	11.01 - 08.06	106	2694	4	3RZ-FE	**T399P**			

TOYOTA Hiace IV Bus ▶

model	year	kW	cm³	cyl	engine	I	II	III	info
Hiace IV Bus									
2.7 4WD	04.98 - 08.01	105	2694	4	3RZ-FE	**T399P**			
Hiace IV Van (RCH2_, RCH1_, KLH2_, KLH1_)									
2.4	08.95 - 02.05	85	2438	4	2RZ-E	**T618P**			
2.4 4WD	08.95 - 04.98	85	2438	4	2RZ-E	**T618P**			
2.7	04.98 - 08.01	105	2694	4	3RZ-FE	**T399P**			
2.7 4WD	04.98 - 08.01	106	2694	4	3RZ-FE	**T399P**			
Hilux II Pick-up (RN6_, RN5_, LN6_, YN6_, YN5_, LN5_)									
2.4 i 4WD	08.97 - 07.05	103	2438	4	2RZ-FE	**T399P**			
Land Cruiser 80 (_J8_)									
4.5 24V	08.92 - 12.97	151	4477	6	1FZ-FE	**T396P**			
Land Cruiser 90 (_J9_)									
3.4 i 24V	04.96 -	131	3378	6	5VZ-FE	**T587P**			semidirect
Liteace Bus, Van									
1.5	01.92 - 01.95	52	1486	4	5K	**T614P**			
MR 2 I (AW1_)									
1.6 16V	11.84 - 06.90	85	1587	4	4A-GELC	**T149B**			
1.6 16V	11.84 - 06.90	91	1587	4	4A-GEL	**T149B**			
MR 2 II (SW2_)									
2.0 16V	12.89 - 05.00	115	1998	4	3S-GE	**T151P**			5 mm cable
	12.89 - 05.00	115	1998	4	3S-GE	**T638B**			7 mm cable
2.0 16V	12.89 - 05.00	125	1998	4	3S-GE	**T151P**			5 mm cable
	12.89 - 05.00	125	1998	4	3S-GE	**T638B**			7 mm cable
2.0 16V	12.89 - 05.00	129	1998	4	3S-GE	**T151P**			5 mm cable
2.0 16V	12.89 - 05.00	129	1998	4	3S-GE	**T638B**			7 mm cable
Paseo Cabriolet, Coupe (EL54)									
1.5	10.96 - 03.99	66	1497	4	5E-FE	**T400P**			
1.5 16V	08.95 - 07.99	66	1497	4	5E-FE	**T400P**			
Picnic (_XM10)									
2.0	01.01 - 12.01	90	1998	4	3S-FE	**T927P**			
2.0 16V (SXM10_)	05.96 - 12.01	94	1998	4	3S-FE	**T927P**			
Previa (TCR2_, TCR1_)									
2.4	05.90 - 08.00	97	2438	4	2TZ-FE	**T123P**			
2.4 4WD	05.90 - 08.00	97	2438	4	2TZ-FE	**T123P**			
2.4 GX	01.94 - 07.97	110	2438	4	2TZ-FZE	**T123P**			
RAV 4 I (SXA1_)									
2.0 4WD	06.94 - 09.97	95	1998	4	3S-FE	**T984P**			with distributor
	06.94 - 08.96	95	1998	4	3S-FE	**T983P**			without distributor
	08.96 - 06.00	95	1998	4	3S-FE	**T927P**			without distributor
RAV 4 I Cabrio (SXA1_)									
2.0 16V 4WD	12.97 - 06.00	94	1998	4	3S-FE	**T984P**			with distributor
	12.97 - 06.00	94	1998	4	3S-FE	**T983P**			without distributor
	12.97 - 06.00	94	1998	4	3S-FE	**T927P**			without distributor
Starlet (_P7_)									
1.3	10.84 - 12.89	55	1295	4	2E-LC	**T966B**			
Starlet (_P8_)									
1.0 (EP80_)	12.89 - 12.92	40	999	4	1E	**T616P**			
1.3 12V cat	12.89 - 03.96	55	1296	4	2E-E	**T616P**			5 mm cable
	12.89 - 03.96	55	1296	4	2E-E	**T966B**			7 mm cable
1.3 12V	12.89 - 12.92	55	1296	4	2E-E/2E	**T966B**			
Starlet (EP91)									
1.3	04.96 - 03.99	55	1332	4	4E-FE	**T401P**			
Supra									
3.0 Turbo	09.87 - 04.93	173	2954	6	7M-GTE	**T636B**			
3.0 Turbo	08.88 - 05.93	175	2954	6	7M-GTE	**T636B**			
3.0 i Bi-Turbo	05.93 - 08.02	243	2997	6	2JZ-GTE	**T639P**			
Tercel, Tercel Sedan, Tercel Station Wagon (AL2_)									
1.3	03.79 - 01.88	48	1296	4	2A	**T615B**			
1.5, 1.5 4WD	10.82 - 01.88	52	1452	4	3A, 3A-U	**T615B**			
1.5	05.86 - 01.88	60	1452	4	3A-U	**T615B**			
TRABANT									
Trabant 601 Sedan, Cabrio, Combi									
0.6	03.70 - 04.90	19	594	2	P63/64, P65/66	**T156 *)**			
Trabant 1.1 Sedan, Cabrio, Combi									
1.1	05.90 - 12.91	30	1043	4	4VO5,9/7,5GRF	**T437B**			
UAZ									
2206, 3303, 3741, 3962									
2.5	12.85 - 12.89	67	2445	4	UMZ 414	**T358S**	**T342H**	**T415M**	premium / basic / inductive
2.5	12.89 -	67	2445	4	UMZ 4178	**T358S**	**T342H**	**T415M**	premium / basic / inductive

**) set with red 7 mm PVC cable, copper core*
комплект с красным 7 мм ПВХ проводом, медный сердечник
sada z červeného 7 mm PVC kabelu, měděné jádro

UAZ 2206, 3303, 3741, 3962

model	year	kW	cm³	cyl	engine	I	II	III	info
2206, 3303, 3741, 3962									
2.7i 16V	05.00 -	104	2693	4	ZMZ 409.10	**T804S**	**T733H**	**T904M**	premium / basic / inductive
2.7i 16V	01.08 -	94	2693	4	ZMZ 4091.10	**T804S**	**T733H**	**T904M**	premium / basic / inductive
2.7i 16V	12.11 -	92	2693	4	ZMZ 40911.10	**T804S**	**T733H**	**T904M**	premium / basic / inductive
2.9	12.85 -	66	2890	4	UMZ 4218	**T358S**	**T342H**	**T415M**	premium / basic / inductive
3909									
2.5	12.85 - 12.89	67	2445	4	UMZ 414	**T358S**	**T342H**	**T415M**	premium / basic / inductive
2.5	12.89 -	67	2445	4	UMZ 4178	**T358S**	**T342H**	**T415M**	premium / basic / inductive
2.9	12.85 -	66	2890	4	UMZ 4218	**T358S**	**T342H**	**T415M**	premium / basic / inductive
3909 Farmer									
2.7i 16V	05.00 -	104	2693	4	ZMZ 409.10	**T804S**	**T733H**	**T904M**	premium / basic / inductive
2.7i 16V	01.08 -	94	2693	4	ZMZ 4091.10	**T804S**	**T733H**	**T904M**	premium / basic / inductive
2.7i 16V	12.11 -	92	2693	4	ZMZ 40911.10	**T804S**	**T733H**	**T904M**	premium / basic / inductive
2.9i	08.97 -	77	2890	4	UMZ 4213	**T677S**	**T676H**	**T678M**	premium / basic / inductive
469B									
2.5	12.72 - 12.85	55	2445	4	UMZ451	**T358S**	**T342H**	**T415M**	premium / basic / inductive
31512									
2.5	12.89 - 12.11	67	2445	4	UMZ 4178	**T358S**	**T342H**	**T415M**	premium / basic / inductive
2.7i 16V	05.00 - 12.11	104	2693	4	ZMZ 409.10	**T804S**	**T733H**	**T904M**	premium / basic / inductive
2.9	12.85 - 12.11	66	2890	4	UMZ 4218	**T358S**	**T342H**	**T415M**	premium / basic / inductive
31514									
2.7i 16V	05.00 - 12.11	104	2693	4	ZMZ 409.10	**T804S**	**T733H**	**T904M**	premium / basic / inductive
2.9	12.93 - 12.11	66	2890	4	UMZ 4218	**T358S**	**T342H**	**T415M**	premium / basic / inductive
3152									
2.5	01.98 -	67	2445	4	UMZ 4178	**T358S**	**T342H**	**T415M**	premium / basic / inductive
3153									
2.9	96 - 10	66	2890	4	UMZ 4218	**T358S**	**T342H**	**T415M**	premium / basic / inductive
3159									
2.7i 16V	12.99 - 12.03	104	2693	4	ZMZ 409.10	**T804S**	**T733H**	**T904M**	premium / basic / inductive
3160, 3162 Simbir									
2.7i 16V	05.00 - 12.03	104	2693	4	ZMZ 409.10	**T804S**	**T733H**	**T904M**	premium / basic / inductive
2.9i	08.97 - 12.03	77	2890	4	UMZ 4213	**T677S**	**T676H**	**T678M**	premium / basic / inductive
3163 Patriot									
2.7i 16V	08.05 -	104	2693	4	ZMZ 409.10	**T804S**	**T733H**	**T904M**	premium / basic / inductive
315195 Hunter									
2.7i 16V	11.03 -	104	2693	4	ZMZ 409.10	**T804S**	**T733H**	**T904M**	premium / basic / inductive
2.9i	11.03 -	77	2890	4	UMZ 4213	**T677S**	**T676H**	**T678M**	premium / basic / inductive
Pick Up									
2.7i 16V	08.05 -	104	2693	4	ZMZ 409.10	**T804S**	**T733H**	**T904M**	premium / basic / inductive
VOLVO									
240 (P242, P244)									
2.0	08.76 - 07.79	66	1986	4	B 19 A	**T380B**			
2.0	09.78 - 08.83	71	1986	4	B 19 A/B 19 K	**T380B**			
2.0	08.84 - 07.85	76	1986	4	B 200 K	**T378B**			coil cable DIN - SAE
	08.84 - 07.85	76	1986	4	B 200 K	**T380B**			coil cable DIN - DIN
2.0	10.82 - 08.84	100	1986	4	B 19 ET	**T380B**			
2.1	08.74 - 07.75	71	2127	4	B 21 A	**T380B**			
2.1	08.75 - 07.80	74	2127	4	B 21 A	**T380B**			
2.1	08.80 - 07.84	79	2127	4	B 21 A	**T380B**			
2.1	08.74 - 07.80	90	2127	4	B 21 E	**T380B**			
2.1 Turbo	08.80 - 07.84	114	2127	4	B 21 ET	**T380B**			
2.3	08.84 - 07.86	81	2315	4	B 230 A	**T380B**			
2.3	08.80 - 07.84	82	2315	4	B 23 A	**T380B**			
2.3	08.86 - 07.87	83	2315	4	B 230 F	**T380B**			
2.3	08.83 - 07.85	96	2316	4	B 230 E	**T380B**			
2.3	08.84 - 12.89	98	2316	4	B 23 E	**T380B**			
2.3	08.80 - 07.83	100	2316	4	B 23 E/B 230 FX	**T380B**			
240 Combi (P245)									
2.0	08.80 - 12.84	71	1986	4	B 19 A/B 19 K	**T380B**			
2.0	08.76 - 01.82	66	1986	4	B 19 A	**T380B**			
2.0	08.84 - 07.85	76	1986	4	B 200 K	**T378B**			coil cable DIN - SAE
	08.84 - 07.85	76	1986	4	B 200 K	**T380B**			coil cable DIN - DIN
2.0	08.83 - 07.93	86	1986	4	B 200 E	**T380B**			
2.0	10.82 - 08.84	100	1986	4	B 19 ET	**T380B**			
2.1	08.74 - 07.75	71	2127	4	B 21 A	**T380B**			
2.1	08.75 - 07.80	74	2127	4	B 21 A	**T380B**			
2.1	08.80 - 07.84	79	2127	4	B 21 A	**T380B**			
2.1	08.80 - 07.84	80	2127	4	B 21 F	**T380B**			
2.1	08.74 - 07.79	90	2127	4	B 21 E	**T380B**			
2.1 Turbo	08.80 - 07.85	114	2127	4	B 21 ET	**T380B**			

VOLVO 240 Combi (P245) ▶

model	year	kW	cm³	cyl	engine	I	II	III	info
240 Combi (P245)									
2.3	08.84 - 07.86	81	2315	4	B 230 A	**T380B**			
2.3	08.80 - 07.84	82	2315	4	B 23 A	**T380B**			
2.3	08.86 - 07.87	83	2316	4	B 230 F	**T380B**			
2.3	08.84 - 07.85	96	2316	4	B 230 E	**T380B**			
2.3	08.84 - 12.88	98	2316	4	B 23 E	**T380B**			
2.3	01.83 - 12.84	100	2316	4	B 23 E	**T380B**			
260 (P262, P264)									
2.7	08.76 - 07.82	92	2664	6	B 27 A	**T381B**			
2.7	08.74 - 07.80	103	2664	6	B 27 E	**T381B**			
2.7	08.78 - 07.82	109	2664	6	B 27 E	**T381B**			
2.8	08.80 - 07.82	95	2849	6	B 28 A	**T381B**			
2.8	08.80 - 07.82	114	2849	6	B 28 E	**T381B**			
260 Combi (P265)									
2.7	08.75 - 07.77	92	2664	6	B 27 A	**T381B**			
2.7	07.75 - 07.82	103	2664	6	B 27 E	**T381B**			
2.7	10.78 - 07.82	109	2664	6	B 27 F	**T381B**			
2.8	08.80 - 07.82	114	2849	6	B 28 F	**T381B**			
340-360 (343, 345)									
1.4	08.82 - 08.85	46	1397	4	B 14.3 E	**T606B**			
1.4	08.79 - 07.83	47	1397	4	B 14.3 E	**T304B**			
1.4	08.86 - 12.88	50	1397	4	B 14.4 S	**T606B**			
1.4	08.75 - 07.83	51	1397	4	B 14.4 S	**T606B**			
1.4	08.87 - 07.88	51	1397	4	B 14.4 S	**T606B**			
1.4	08.83 - 07.86	52	1397	4	B 14.4 S	**T606B**			
1.7	08.85 - 07.91	59	1721	4	B 17 2 K	**T196B**			
2.0	08.80 - 07.84	65	1986	4	B 19 A	**T380B**			
2.0	08.83 - 07.84	68	1986	4	B 19 A	**T380B**			
2.0	08.80 - 07.83	70	1986	4	B 19 A/B 200 K	**T378B**			coil cable DIN - SAE
	08.80 - 07.83	70	1986	4	B 19 A/B 200 K	**T380B**			coil cable DIN - DIN
2.0	08.84 - 07.87	77	1986	4	B 200 K	**T378B**			coil cable DIN - SAE
	08.84 - 07.87	77	1986	4	B 200 K	**T380B**			coil cable DIN - DIN
2.0	08.88 - 07.89	80	1986	4	B 200 F	**T378B**			coil cable DIN - SAE
	08.88 - 07.89	80	1986	4	B 200 F	**T380B**			coil cable DIN - DIN
2.0	08.87 - 07.88	81	1986	4	B 200 F	**T378B**			coil cable DIN - SAE
	08.87 - 07.88	81	1986	4	B 200 F	**T380B**			coil cable DIN - DIN
2.0	08.86 - 07.88	82	1986	4	B 200 E/B 200 F	**T378B**			coil cable DIN - SAE
	08.86 - 07.88	82	1986	4	B 200 E/B 200 F	**T380B**			coil cable DIN - DIN
2.0	08.82 - 07.84	83	1986	4	B 19 E	**T380B**			
2.0	08.82 - 07.84	85	1986	4	B 19 E	**T380B**			
2.0	08.84 - 07.86	87	1986	4	B 200 E	**T380B**			
340-360 Sedan (344)									
1.4	08.86 - 12.88	50	1397	4	B 14.4 S	**T606B**			
1.4	08.87 - 07.88	51	1397	4	B 14.4 S	**T606B**			
1.4	08.83 - 07.86	53	1397	4	B 14.4 S	**T606B**			
1.7	08.85 - 07.91	59	1721	4	B 17 2 K	**T196B**			
2.0	08.82 - 07.84	66	1986	4	B 19 A	**T380B**			
2.0	08.83 - 07.84	68	1986	4	B 19 A	**T380B**			
2.0	08.84 - 07.90	75	1986	4	B 200 K	**T378B**			coil cable DIN - SAE
	08.84 - 07.90	75	1986	4	B 200 K	**T380B**			coil cable DIN - DIN
2.0	08.84 - 07.87	77	1986	4	B 200 K	**T378B**			coil cable DIN - SAE
	08.84 - 07.87	77	1986	4	B 200 K	**T380B**			coil cable DIN - DIN
2.0	08.88 - 07.89	80	1986	4	B 200 F	**T378B**			coil cable DIN - SAE
	08.88 - 07.89	80	1986	4	B 200 F	**T380B**			coil cable DIN - DIN
2.0	08.86 - 07.88	82	1986	4	B 200 EA	**T378B**			coil cable DIN - SAE
	08.86 - 07.88	82	1986	4	B 200 EA	**T380B**			coil cable DIN - DIN
2.0	08.83 - 07.84	83	1986	4	B 19 E	**T380B**			
2.0	08.84 - 07.86	85	1986	4	B 200 E	**T378B**			coil cable DIN - SAE
	08.84 - 07.86	85	1986	4	B 200 E	**T380B**			coil cable DIN - DIN
2.0	08.84 - 07.86	87	1986	4	B 200 E	**T378B**			coil cable DIN - SAE
	08.84 - 07.86	87	1986	4	B 200 E	**T380B**			coil cable DIN - DIN
440 K (445)									
1.6	09.88 - 12.96	61	1596	4	B 16 F	**T609B**			
	09.88 - 12.96	61	1596	4	B 16 F	**T858B**			angled boot
1.7	09.88 - 12.96	64	1721	4	B 18 KP	**T858B**			
1.7	08.88 - 07.89	70	1721	4	B 18 F	**T858B**			
1.7	08.89 - 12.96	75	1721	4	B 18 FP	**T609B**			
	08.89 - 12.96	75	1721	4	B 18 FP	**T858B**			angled boot
1.7	09.88 - 12.96	78	1721	4	B 18 EP	**T858B**			
1.7 Turbo	08.88 - 07.96	88	1721	4	B 18 FT	**T914B**			
1.7 Turbo	01.91 - 12.96	90	1721	4	B 18 FT	**T914B**			

VOLVO 440 K (445)

model	year	kW	cm³	cyl	engine	I	II	III	info
440 K (445)									
1.8	08.91 - 07.96	66	1794	4	B 18 U	**T858B**			
1.8	09.95 - 12.96	66	1794	4	B 18 U	**T858B**			
2.0	08.92 - 07.95	81	1998	4	B 20 F	**T858B**			
2.0	08.93 - 07.96	80	1998	4	B 20 F	**T858B**			
460 L (464)									
1.6	07.92 - 07.96	61	1596	4	B 16 F	**T858B**			
1.7	09.90 - 07.96	66	1721	4	B 18 KP	**T609B**			
	09.88 - 07.96	64	1721	4	B 18 KP	**T858B**			angled boot
1.7	08.89 - 07.92	75	1721	4	B 18 EP	**T858B**			
1.7 Turbo	08.89 - 07.96	88	1721	4	B 18 FT	**T914B**			
1.7 Turbo	01.91 - 07.96	90	1721	4	B 18 FT	**T914B**			
1.8	08.91 - 07.96	66	1794	4	B 18 U	**T858B**			
2.0	08.92 - 07.95	81	1998	4	B 20 F	**T858B**			
2.0	08.93 - 07.96	80	1998	4	B 20 F	**T858B**			
480 E									
1.7	08.87 - 07.89	70	1721	4	B 18 F	**T858B**			
1.7	08.89 - 07.96	75	1721	4	B 18 EP	**T858B**			
1.7	04.86 - 07.89	78	1721	4	B 18 E	**T858B**			
1.7	08.86 - 07.88	80	1721	4	B 18 E	**T858B**			
1.7 Turbo	08.87 - 07.96	88	1721	4	B 18 FT	**T914B**			
1.7 Turbo	01.91 - 07.96	90	1721	4	B 18 FT	**T914B**			
2.0	08.92 - 09.95	81	1998	4	B 20 F	**T858B**			
740 (744)									
2.0	09.88 - 08.90	76	1986	4	B 200 K	**T113B**			
2.0	09.90 - 08.92	82	1986	4	B 200 F	**T607B**			
2.0	08.85 - 07.92	89	1986	4	B 200 G	**T915B**			
2.0	01.87 - 08.88	86	1986	4	B 200 E	**T607B**			
2.0	12.83 - 07.84	110	1986	4	B 19 ET	**T608B**			
2.0	01.86 - 08.90	118	1986	4	B 200 ET	**T607B**			
2.0	01.85 - 12.85	120	1986	4	B 200 ET	**T607B**			
2.0 GLE	09.87 - 08.90	103	1986	4	B 204 E	**T608B**			
2.3	09.85 - 12.89	83	2315	4	B 230 F	**T915B**			
2.3	08.84 - 07.90	84	2316	4	B 230 F	**T113B**			
2.3	08.87 - 07.92	85	2316	4	B 230 F	**T607B**			
2.3	08.86 - 07.88	86	2316	4	B 230 K	**T915B**			
2.3	08.83 - 07.84	95	2316	4	B 23 E	**T380B**			
2.3	08.84 - 07.88	96	2316	4	B 230 E	**T607B**			
2.3	08.88 - 07.90	100	2316	4	B 230 FB	**T607B**			
2.3	08.88 - 08.92	111	2316	4	B 234 F	**T608B**			
2.3	08.88 - 07.91	114	2316	4	B 234 F	**T608B**			
2.3	08.87 - 07.89	117	2316	4	B 234 F	**T608B**			
2.3 Turbo	08.86 - 07.89	115	2316	4	B 230 FT	**T915B**			
2.3 Turbo	08.89 - 07.90	121	2316	4	B 230 FT	**T915B**			
2.3 Turbo	09.89 - 08.91	125	2316	4	B 230 FT	**T915B**			
2.3 Turbo	08.85 - 12.88	134	2316	4	B 230 ET	**T607B**			
2.3 Turbo	08.89 - 07.90	140	2316	4	B 230 FT	**T915B**			
740 Combi (745)									
2.0	09.88 - 08.90	76	1986	4	B 200 K	**T113B**			
2.0	08.89 - 07.91	82	1986	4	B 200 F	**T607B**			
2.0	01.87 - 08.88	86	1986	4	B 200 E	**T607B**			
2.0	08.85 - 07.92	89	1986	4	B 200 G/B 200 E	**T915B**			
2.0 16V	09.87 - 08.90	100	1986	4	B 204 E	**T608B**			
2.0 GLE	09.87 - 08.90	103	1986	4	B 204 E	**T608B**			
2.0 Turbo	09.87 - 08.90	115	1986	4	B 200 ET	**T607B**			
2.0 Turbo	05.85 - 08.87	121	1986	4	B 200 ET	**T607B**			
2.3	08.85 - 12.89	83	2315	4	B 230 F	**T607B**			
2.3	09.85 - 07.90	84	2316	4	B 230 K	**T915B**			
2.3	08.85 - 07.88	96	2316	4	B 230 E	**T607B**			
2.3	08.87 - 07.92	85	2316	4	B 230 F	**T607B**			
2.3	08.89 - 07.90	100	2316	4	B 230 FB	**T607B**			
2.3	07.89 - 08.92	111	2316	4	B 234 F	**T608B**			
2.3	08.88 - 07.90	114	2316	4	B 234 F	**T608B**			
2.3	08.87 - 07.89	117	2316	4	B 234 F	**T608B**			
2.3 Turbo	08.86 - 07.89	115	2316	4	B 230 FT	**T915B**			
2.3 Turbo	08.89 - 07.90	121	2316	4	B 230 FT	**T915B**			
2.3 Turbo	09.89 - 08.91	125	2316	4	B 230 FT	**T915B**			
2.3 Turbo	08.85 - 07.88	134	2316	4	B 230 ET	**T607B**			
2.3 Turbo	08.89 - 07.90	140	2316	4	B 230 FT	**T915B**			
760 (704, 764)									
2.3	01.88 - 07.92	119	2316	4	B 230 FT	**T915B**			

VOLVO 760 (704, 764) ▶

model	year	kW	cm³	cyl	engine	I	II	III	info
760 (704, 764)									
2.3 Turbo	09.87 - 08.90	115	2316	4	B 230 FT	**T915B**			
2.3 Turbo	08.84 - 10.88	134	2316	4	B 230 ET	**T607B**			
2.3 Turbo	08.82 - 07.84	127	2315	4	B 23 ET	**T380B**			
2.8	01.82 - 12.87	95	2849	6	B 28 A	**T381B**			
2.8	05.86 - 08.91	105	2849	6	B 280 F	**T199B**			
2.8	08.81 - 07.88	115	2849	6	B 280 E/B 28 E	**T381B**			
2.8	08.86 - 07.90	108	2849	6	B 280 F	**T199B**			
760 Combi (704, 765)									
2.3 Turbo	08.84 - 08.90	134	2316	4	B 230 ET	**T607B**			
2.3 Turbo	09.87 - 08.90	115	2316	4	B 230 FT	**T915B**			
2.8	05.86 - 12.87	95	2849	6	B 28 A	**T381B**			
2.8	05.86 - 08.91	105	2849	6	B 280 F	**T199B**			
2.8	08.86 - 08.90	115	2849	6	B 280 E/B 28 E	**T381B**			
780									
2.9	08.86 - 07.87	115	2849	6	B 280 E	**T199B**			
2.9	08.87 - 07.90	108	2849	6	B 280 F	**T199B**			
850 (LS)									
2.0	08.94 - 12.96	93	1984	5	B 5202 S	**T916B**			
2.0	06.91 - 12.96	105	1984	5	B 5204 F	**T916B**			
2.0 Turbo	08.93 - 12.96	155	1984	5	B 5204 T/B 5204 FT	**T916B**			
2.3 T5	08.93 - 07.96	166	2319	5	B 5234 FT	**T916B**			
2.3 T5-R	08.95 - 12.96	184	2319	5	B 5234 T4	**T916B**			
2.5	06.91 - 07.94	103	2435	5	B 5252	**T916B**			
2.5	08.94 - 12.96	106	2435	5	B 5252 FS	**T916B**			
2.5	08.91 - 12.96	125	2435	5	B 5254 S	**T916B**			
850 Combi (LW)									
2.0	08.94 - 12.96	93	1984	5	B 5202 S	**T916B**			
2.0	02.93 - 12.96	105	1984	5	B 5204 F	**T916B**			
2.0 Turbo	02.93 - 12.96	155	1984	5	B 5204 T/B 5204 FT	**T916B**			
2.3 T5	02.93 - 12.96	166	2319	5	B 5234 FT	**T916B**			
2.3 T5-R	08.95 - 12.96	184	2319	5	B 5234 T4	**T916B**			
2.5	08.92 - 07.94	103	2435	5	B 5252	**T916B**			
2.5	08.94 - 12.96	106	2435	5	B 5252 FS	**T916B**			
2.5	09.92 - 12.96	125	2435	5	B 5254 S	**T916B**			
2.5 AWD	04.96 - 12.96	142	2435	5	B 5254 T	**T916B**			
940 (944)									
2.0	01.92 - 07.94	82	1986	4	B 200 F	**T915B**			
2.0 GL	09.90 - 04.92	103	1986	4	B 204 E	**T608B**			
2.0 Turbo	08.90 - 12.94	114	1986	4	B 200 FT	**T915B**			
2.3	08.92 - 07.94	85	2316	4	B 230 FD	**T915B**			
2.3	08.90 - 12.94	96	2316	4	B 230 G/B 230 FB	**T915B**			
2.3	08.90 - 07.91	114	2316	4	B 234 F /B 234 G	**T608B**			
2.3 Turbo	08.90 - 07.94	121	2316	4	B 230 FT	**T607B**			
2.3 Turbo	08.91 - 07.93	140	2316	4	B 230 FT+	**T915B**			
940 Combi (945)									
2.0	01.92 - 07.94	82	1986	4	B 200 F	**T915B**			
2.0 GL	09.90 - 04.92	103	1986	4	B 204 E	**T608B**			
2.0 Turbo	01.91 - 07.95	114	1986	4	B 200 FT	**T915B**			
2.3	08.92 - 07.94	85	2316	4	B 230 FD	**T915B**			
2.3	08.90 - 12.94	96	2316	4	B 230 FB	**T915B**			
2.3	08.90 - 07.91	114	2316	4	B 234 F	**T608B**			
2.3 Turbo	08.90 - 07.94	121	2316	4	B 230 FT	**T607B**			
2.3 Turbo	08.91 - 07.93	140	2316	4	B 230 FT+	**T607B**			
940 II (944)									
2.0 Turbo	04.96 - 10.98	114	1986	4	B 200 FT	**T915B**			
2.3	08.94 - 07.95	85	2316	4	B 230 FD	**T915B**			
2.3	08.94 - 10.98	96	2316	4	B 230 FB	**T915B**			
2.3 ti	01.95 - 10.98	99	2316	4	B 230 FK	**T915B**			
2.3 Turbo	08.94 - 10.98	121	2316	4	B 230 FT	**T915B**			
940 II Combi (945)									
2.0 Turbo	04.96 - 10.98	114	1986	4	B 200 FT	**T915B**			
2.3	08.94 - 07.95	85	2316	4	B 230 FD	**T915B**			
2.3	08.94 - 10.98	96	2316	4	B 230 FB	**T915B**			
2.3 ti	01.95 - 10.98	99	2316	4	B 230 FK	**T915B**			
2.3 Turbo	08.94 - 10.98	121	2316	4	B 230 FT	**T915B**			
2.3 Turbo	08.95 - 10.98	126	2316	4	B 230 FT	**T915B**			
960 (964)									
2.0	09.90 - 08.93	103	1986	4	B 204 E	**T608B**			
2.0	08.90 - 09.93	140	1986	4	B 204 FT	**T915B**			
2.3 Turbo	09.90 - 08.93	121	2316	4	B 230 FT	**T607B**			

VOLVO 960 Combi (965) ▶

model	year	kW	cm³	cyl	engine	I	II	III	info
960 Combi (965)									
2.0	09.90 - 08.93	103	1986	4	B 204 E	**T608B**			
2.0	08.90 - 09.93	140	1986	4	B 204 FT	**T915B**			
2.3 Turbo	09.90 - 08.93	121	2316	4	B 230 FT	**T607B**			
C30									
1.6	10.06 -	74	1596	4	B 4164 S3	**T500G**			
C70 I Cabriolet									
2.0	03.98 - 10.05	132	1984	5	B 5204 T2	**T916B**			
2.0 T	03.98 - 08.98	166	1984	5	B 5204 T3	**T916B**			
2.3 T-5	03.98 - 08.98	176	2319	5	B 5234 T3	**T916B**			
2.5 T	03.98 - 08.98	142	2435	5	B 5254 T	**T916B**			
C70 I Coupe									
2.0	03.97 - 09.02	132	1984	5	B 5204 T2	**T916B**			
2.0 T	03.97 - 07.98	166	1984	5	B 5204 T3	**T916B**			
2.3 T-5	03.97 - 07.98	176	2319	5	B 5234 T3	**T916B**			
2.5 T	03.97 - 09.02	142	2435	5	B 5254 T	**T916B**			
S40 I (VS)									
1.6	09.95 - 08.99	77	1588	4	B 4164 S	**T917B**			
1.6	03.99 - 12.03	80	1587	4	B 4164 S2	**T382B**			semidirect
	03.99 - 12.03	80	1587	4	B 4164 S2	**T917B**			for cyl 1-4-2-3
1.8	07.95 - 08.99	85	1731	4	B 4184 S3/B 4184 S	**T382B**			semidirect
	07.95 - 08.99	85	1731	4	B 4184 S3/B 4184 S	**T917B**			for cyl 1-4-2-3
1.8	03.99 - 12.03	90	1783	4	B 4184 S2/B 4184 S9	**T382B**			semidirect
	03.99 - 12.03	90	1783	4	B 4184 S2/B 4184 S9	**T917B**			for cyl 1-4-2-3
1.8 i	06.01 - 12.03	90	1834	4	B 4184 SJ	**T382B**			semidirect
	06.01 - 12.03	90	1834	4	B 4184 SJ	**T917B**			for cyl 1-4-2-3
1.8 i	03.98 - 12.03	92	1834	4	B 4184 SM	**T917B**			
1.9 T4	05.97 - 07.00	147	1855	4	B 4194 T/B 4194 T2	**T382B**			semidirect
2.0	07.95 - 12.03	100	1948	4	B 4204 S2/B 4204 S	**T382B**			semidirect
	07.95 - 12.03	100	1948	4	B 4204 S2/B 4204 S	**T917B**			for cyl 1-4-2-3
2.0	07.95 - 08.99	103	1948	4	B 4204 S	**T917B**			
2.0 T	10.97 - 07.00	118	1948	4	B 4204 T	**T382B**			semidirect
	10.97 - 07.00	118	1948	4	B 4204 T	**T917B**			for cyl 1-4-2-3
2.0 T	06.01 - 12.03	120	1948	4	B 4204 T3	**T382B**			semidirect
2.0 T	07.00 - 06.01	121	1948	4	B 4204 T2/B 4204 T3	**T382B**			semidirect
2.0 T4	07.00 - 12.03	147	1948	4	B 4204 T5	**T382B**			semidirect
S40 II (MS)									
1.6	01.05 -	74	1596	4	B 4164 S3	**T500G**			
S70 (P80_)									
2.0	01.97 - 11.00	93	1984	5	B 5202 S	**T916B**			
2.0	01.97 - 11.00	105	1984	5	B 5204 F	**T916B**			
2.0	01.97 - 11.00	132	1984	5	B 5204 T2	**T916B**			
2.0 Turbo	01.97 - 11.00	155	1984	5	B 5204 T	**T916B**			
2.0 Turbo	01.97 - 11.00	166	1984	5	B 5204 T3	**T916B**			
2.3	04.99 - 09.00	195	2319	5	B 5234 T7	**T916B**			
2.3 T-5	01.97 - 07.98	176	2319	5	B 5234 T3	**T916B**			
2.3 T5 AWD	07.97 - 09.00	184	2319	5	B 5234 T4	**T916B**			
2.3 Turbo	01.97 - 11.00	184	2319	5	B 5234 FT+	**T916B**			
2.4	01.97 - 11.00	125	2435	5	B 5244 S/B 5254 S	**T916B**			
2.4 AWD	11.96 - 05.99	106	2435	5	B 5252 FS	**T916B**			
2.4 T5 AWD	11.96 - 04.99	142	2435	5	B 5254 T	**T916B**			
2.4 Turbo	01.97 - 07.98	142	2435	5	B 5254 T/B 5244 T	**T916B**			
2.5	01.97 - 11.00	106	2435	5	B 5252 FS	**T916B**			
2.5	06.98 - 11.00	121	2435	5	B 5254 S	**T916B**			
2.5 Bifuel	10.98 - 11.00	106	2435	5	GB 5252 S	**T916B**			
V40 Combi (VW)									
1.6	12.95 - 08.99	77	1588	4	B 4164 S	**T917B**			
1.6	03.99 - 06.04	80	1587	4	B 4164 S2	**T382B**			semidirect
	03.99 - 06.04	80	1587	4	B 4164 S2	**T917B**			for cyl 1-4-2-3
1.8	07.95 - 08.99	85	1731	4	B 4184 S3/B 4184 S	**T382B**			semidirect
	07.95 - 08.99	85	1731	4	B 4184 S3/B 4184 S	**T917B**			for cyl 1-4-2-3
1.8	03.99 - 06.04	90	1783	4	B 4184 S2/B 4184 S9	**T382B**			semidirect
	03.99 - 06.04	90	1783	4	B 4184 S2/B 4184 S9	**T917B**			for cyl 1-4-2-3
1.8 i	03.98 - 06.04	92	1834	4	B 4184 SM	**T917B**			
1.9 T4	05.97 - 07.00	147	1855	4	B 4194 T	**T382B**			semidirect
	05.97 - 07.00	147	1855	4	B 4194 T	**T917B**			for cyl 1-4-2-3
2.0	07.95 - 06.04	100	1948	4	B 4204 S2/B 4204 S	**T382B**			semidirect
	07.95 - 06.04	100	1948	4	B 4204 S2/B 4204 S	**T917B**			for cyl 1-4-2-3
2.0	07.95 - 08.99	103	1948	4	B 4204 S	**T917B**			
2.0 T	10.97 - 07.00	118	1948	4	B 4204 T	**T382B**			semidirect
	10.97 - 07.00	118	1948	4	B 4204 T	**T917B**			for cyl 1-4-2-3

VOLVO V40 Combi (VW) ▶

model	year	kW	cm³	cyl	engine	I	II	III	info
V40 Combi (VW)									
2.0 T	07.99 - 06.01	121	1948	4	B 4204 T2	**T382B**			semidirect
2.0 T	06.01 - 06.04	120	1948	4	B 4204 T3	**T382B**			semidirect
2.0 T4	07.00 - 06.04	147	1948	4	B 4204 T5	**T382B**			semidirect
V50 (MW)									
1.6	01.05 -	74	1596	4	B 4164 S3	**T500G**			
V70 I (P80_)									
2.0	01.97 - 03.00	93	1984	5	B 5202 S	**T916B**			
2.0	01.97 - 03.00	105	1984	5	B 5204 F	**T916B**			
2.0	01.97 - 03.00	132	1984	5	B 5204 T2	**T916B**			
2.0 Turbo	01.97 - 07.98	155	1984	5	B 5204 T	**T916B**			
2.0 Turbo	01.97 - 07.98	166	1984	5	B 5204 T3	**T916B**			
2.0 Turbo AWD	01.97 - 07.98	166	1984	5	B 5204 T3	**T916B**			
2.3 AWD	04.97 - 09.98	177	2319	5	B 5234 T3	**T916B**			
2.3 T AWD	04.97 - 03.00	184	2319	5	B 5234 FT+	**T916B**			
2.3 T-5	01.97 - 07.98	176	2319	5	B 5234 T3	**T916B**			
2.3 T-5 AWD	01.97 - 07.98	176	2319	5	B 5234 T3	**T916B**			
2.3 Turbo	01.97 - 03.00	184	2319	5	B 5234 FT+	**T916B**			
2.4 Turbo	01.97 - 07.98	142	2435	5	B 5254 T	**T916B**			
2.5	01.97 - 03.00	106	2435	5	B 5252 FS	**T916B**			
2.5	06.98 - 03.00	121	2435	5	B 5254 S	**T916B**			
2.5 Bifuel	10.98 - 08.99	106	2435	5	GB 5252 S	**T916B**			
2.5 Turbo AWD	01.97 - 07.98	142	2435	5	B 5254 T	**T916B**			
VW									
Beetle (5C1)									
1.2 TSI	07.11 -	77	1197	4	CBZB	**T406C**	**T056B**		original / alternative
Beetle Cabriolet (5C7)									
1.2 TSI	12.12 -	77	1197	4	CBZB	**T406C**	**T056B**		original / alternative
Bora (1J2)									
1.4 16V	03.00 - 05.05	55	1390	4	AHW/AXP/APE/AKQ	**T874C**	**T004B**		original / alternative
1.6	10.98 - 05.05	74	1595	4	AKL/APF/AEH	**T674C**	**T059B**		original / alternative
1.6	08.00 - 05.05	75	1595	4	AVU/BFQ	**T854C**	**T076B**		original / alternative
1.6 16V	05.00 - 05.05	77	1598	4	AUS/ATN	**T874C**	**T004B**		original / alternative
1.8	10.98 - 05.05	92	1781	4	AGN	**T559C**			
1.8 4motion	02.99 - 05.05	92	1781	4	AGN	**T559C**			
2.0	10.98 - 05.05	85	1984	4	APK/AZH/AQY	**T855C**	**T077B**		original / alternative
	10.98 - 05.05	85	1984	4	AZJ/AZG	**T856C**	**T078B**		original / alternative
2.0 4motion	04.00 - 05.05	85	1984	4	AZH	**T855C**	**T077B**		original / alternative
	04.00 - 05.05	85	1984	4	AZJ	**T856C**	**T078B**		original / alternative
2.3 V5	10.98 - 10.00	110	2324	5	AGZ	**T153C**	**T081B**		original / alternative
2.3 V5 4motion	12.98 - 12.98	110	2324	5	AGZ	**T153C**	**T081B**		original / alternative
	01.99 - 04.00	110	2324	5	AGZ	**T102C**	**T095B**		original / alternative
	05.00 - 10.00	110	2324	5	AGZ	**T659C**			
2.8 V6 4motion	03.99 - 04.01	150	2792	6	AQP/AUE/BDE	**T165C**			
Bora Combi (1J6)									
1.4 16V	09.01 - 05.05	55	1390	4	AHW/AXP	**T874C**	**T004B**		original / alternative
1.6	05.99 - 05.05	74	1595	4	APF/AEH	**T674C**	**T059B**		original / alternative
1.6	08.00 - 05.05	75	1595	4	AVU/BFQ	**T854C**	**T076B**		original / alternative
1.6 16V	02.00 - 05.05	77	1598	4	AUS/ATN	**T874C**	**T004B**		original / alternative
1.8 4motion	05.99 - 05.05	92	1781	4	AGN	**T559C**			
2.0	05.99 - 05.05	85	1984	4	APK/AZH/AQY	**T855C**	**T077B**		original / alternative
	05.99 - 05.05	85	1984	4	AZJ/AZG	**T856C**	**T078B**		original / alternative
2.0 4motion	04.00 - 05.05	85	1984	4	AZH	**T855C**	**T077B**		original / alternative
	04.00 - 05.05	85	1984	4	AZJ	**T856C**	**T078B**		original / alternative
2.3 V5	05.99 - 10.00	110	2324	5	AGZ	**T102C**	**T095B**		original / alternative
2.3 V5 4motion	05.99 - 04.00	110	2324	5	AGZ	**T102C**	**T095B**		original / alternative
	05.00 - 10.00	110	2324	5	AGZ	**T659C**			
2.8 V6 4motion	05.99 - 05.05	150	2792	6	AQP/AUE/BDE	**T165C**			
Caddy I (14)									
1.6	01.83 - 07.92	55	1595	4	EW	**T650C**	**T035B**	**T731B**	orig. / alter. / suppl.
1.8	08.85 - 07.92	70	1781	4	JH	**T650C**	**T035B**	**T731B**	orig. / alter. / suppl.
Caddy II Combi (9K9B)									
1.4	11.95 - 01.04	44	1390	4	AUD	**T578C**	**T074B**		original / alternative
	11.95 - 01.04	44	1390	4	AEX/AKV/APQ	**T865C**	**T055B**		original / alternative
1.4 16V	08.00 - 01.04	55	1390	4	AUA	**T874C**	**T004B**		original / alternative
1.6	11.95 - 05.97	55	1595	4	1F	**T650C**	**T035B**	**T731B**	orig. / alter. / suppl.
1.6	06.97 - 09.00	55	1598	4	AEE	**T654C**	**T045B**		original / alternative
Caddy II Pick-up (9U7)									
1.6	06.96 - 12.00	55	1598	4	AEE	**T654C**	**T045B**		original / alternative

VW Caddy II Van (9K9A) ▶

model	year	kW	cm³	cyl	engine	I	II	III	info
Caddy II Van (9K9A)									
1.4	11.95 - 01.04	44	1390	4	AUD	**T578C**	**T074B**		original / alternative
	11.95 - 01.04	44	1390	4	AEX/APQ	**T865C**	**T055B**		original / alternative
1.4	08.00 - 01.04	55	1390	4	AUA	**T874C**	**T004B**		original / alternative
1.6	11.95 - 09.00	55	1598	4	AEE	**T654C**	**T045B**		original / alternative
1.6	11.95 - 05.97	55	1595	4	1F	**T650C**	**T035B**	**T731B**	orig. / alter. / suppl.
Caddy III Combi (2KB, 2KJ, 2CB, 2CJ)									
1.2 TSI	09.10 -	63	1197	4	CBZA	**T406C**	**T056B**		original / alternative
1.2 TSI	09.10 -	77	1197	4	CBZB	**T406C**	**T056B**		original / alternative
1.6	04.04 -	75	1595	4	BGU/BSF/BSE	**T854C**	**T076B**		original / alternative
1.6 BiFuel	05.11 -	75	1595	4	CHGA	**T854C**	**T076B**		original / alternative
2.0 EcoFuel	04.06 -	80	1984	4	BSX	**T856C**	**T078B**		original / alternative
Caddy III Van (2KA, 2KH, 2CA, 2CH)									
1.2 TSI	09.10 -	63	1197	4	CBZA	**T406C**	**T056B**		original / alternative
1.2 TSI	09.10 -	77	1197	4	CBZB	**T406C**	**T056B**		original / alternative
1.6	04.04 -	75	1595	4	BGU/BSF/BSE	**T854C**	**T076B**		original / alternative
1.6 BiFuel	05.11 -	75	1595	4	CHGA	**T854C**	**T076B**		original / alternative
2.0 EcoFuel	04.06 -	80	1984	4	BSX	**T856C**	**T078B**		original / alternative
Corrado (53I)									
1.8 16V	04.89 - 07.92	100	1781	4	KR	**T103C**	**T089B**		original / alternative
1.8 G60	09.88 - 09.93	118	1781	4	PG	**T650C**	**T035B**	**T731B**	orig. / alter. / suppl.
2.0 i	04.93 - 12.95	85	1984	4	2E	**T650C**	**T035B**	**T731B**	orig. / alter. / suppl.
2.0 i 16V	08.91 - 12.95	100	1984	4	9A	**T103C**	**T089B**		original / alternative
2.9 VR6	08.91 - 12.95	140	2861	6	ABV	**T918C**	**T063B**		orig. / alter., with distributor
	08.91 - 12.95	140	2861	6	ABV	**T823C**	**T062B**		orig. / alter., without distrib.
Derby (86)									
0.9	02.77 - 09.81	29	895	4	HA	**T732B**			
1.1	02.77 - 09.81	37	1093	4	HB	**T732B**			
1.3	02.77 - 09.81	43	1272	4	HJ	**T732B**			
1.3	02.77 - 09.81	44	1272	4	HH	**T732B**			
Derby (86C, 80)									
1.1	10.81 - 07.83	37	1093	4	HB	**T732B**			
1.3	08.83 - 12.84	37	1272	4	HW	**T732B**			
1.3	08.83 - 12.84	40	1272	4	HK	**T732B**			DIN
	08.83 - 12.84	40	1272	4	HK	**T654C**	**T045B**		orig. / alter. - PIN
1.3	08.81 - 07.83	44	1272	4	HH	**T732B**			
1.3	09.82 - 12.84	55	1272	4	GK	**T732B**			
Fox (5Z1, 5Z3)									
1.4	04.05 -	55	1390	4	BKR	**T387C**	**T098B**		original / alternative
Golf I (17)									
1.1	04.74 - 07.83	37	1093	4	GG/FA	**T732B**			
1.3	08.82 - 12.83	43	1272	4	GS	**T732B**			
1.3	08.79 - 07.83	44	1272	4	GF	**T732B**			
Golf I Cabriolet (155)									
1.3	08.83 - 07.86	40	1272	4	HK	**T732B**			
1.6	04.86 - 02.90	53	1595	4	RE	**T650C**	**T035B**	**T731B**	orig. / alter. / suppl.
1.6	08.83 - 04.92	55	1595	4	EW/HN	**T650C**	**T035B**	**T731B**	orig. / alter. / suppl.
1.8	08.83 - 09.92	66	1781	4	EX	**T650C**	**T035B**	**T731B**	orig. / alter. / suppl.
1.8	08.83 - 04.93	70	1781	4	JH	**T650C**	**T035B**	**T731B**	orig. / alter. / suppl.
1.8	08.89 - 03.93	72	1781	4	2H	**T657C**	**T086B**	**T734B**	orig. / alter. / suppl.
1.8	08.82 - 12.89	82	1781	4	DX	**T650C**	**T035B**	**T731B**	orig. / alter. / suppl.
Golf II (19E, 1G1)									
1.0	08.85 - 10.91	37	1043	4	HZ	**T649C**	**T044B**	**T730B**	orig. / alter. / suppl.
1.3	08.83 - 06.87	40	1272	4	MH/HK	**T654C**	**T045B**		original / alternative
1.3 cat	06.86 - 12.92	40	1272	4	NZ	**T649C**	**T044B**	**T730B**	orig. / alter. / suppl.
1.6	10.86 - 12.92	51	1595	4	PN	**T650C**	**T035B**	**T731B**	orig. / alter. / suppl.
1.6	02.86 - 10.91	53	1595	4	RF	**T650C**	**T035B**	**T731B**	orig. / alter. / suppl.
1.6	08.83 - 07.92	55	1595	4	HM/EZ	**T650C**	**T035B**	**T731B**	orig. / alter. / suppl.
1.8	08.86 - 01.90	62	1781	4	RH	**T650C**	**T035B**	**T731B**	orig. / alter. / suppl.
1.8	08.84 - 10.91	66	1781	4	GX/GU/HV	**T650C**	**T035B**	**T731B**	orig. / alter. / suppl.
1.8 GTI	08.83 - 10.91	82	1781	4	EV/GZ/PB	**T650C**	**T035B**	**T731B**	orig. / alter. / suppl.
1.8 GTI	08.85 - 10.87	79	1781	4	RD	**T650C**	**T035B**	**T731B**	orig. / alter. / suppl.
1.8 GTI 16V	02.86 - 10.91	95	1781	4	PL	**T714C**	**T017B**		original / alternative
1.8 GTI 16V	02.86 - 06.90	102	1781	4	KR	**T714C**	**T017B**		original / alternative
1.8 GTI cat	01.87 - 10.91	79	1781	4	PF	**T650C**	**T035B**	**T731B**	orig. / alter. / suppl.
1.8 GTI G60	04.90 - 07.91	118	1781	4	PG	**T821C**	**T040B**		original / alternative
1.8 GTI G60 Syncro	08.88 - 07.91	118	1781	4	PG/1H	**T651C**	**T036B**		original / alternative
1.8 i cat	08.87 - 10.91	66	1781	4	GX	**T649C**	**T044B**	**T730B**	orig. / alter. / suppl.
1.8 i Syncro cat	08.87 - 10.91	66	1781	4	RP	**T649C**	**T044B**	**T730B**	orig. / alter. / suppl.
1.8 Syncro	02.86 - 07.91	66	1781	4	GX	**T649C**	**T044B**	**T730B**	orig. / alter. / suppl.
1.8 Syncro	08.88 - 07.91	72	1781	4	1P	**T821C**	**T040B**		original / alternative

VW Golf III (1H1) ▶

model	year	kW	cm³	cyl	engine	I	II	III	info
Golf III (1H1)									
1.4	11.91 - 08.97	40	1390	4	AEX/ABD	**T820C**	**T054B**		original / alternative
1.4	10.91 - 08.97	44	1390	4	AEX	**T654C**	**T045B**		original / alternative
	10.91 - 08.97	44	1390	4	ABD	**T820C**	**T054B**		original / alternative
1.6	09.92 - 08.97	55	1598	4	ABU/AEA/AEE	**T654C**	**T045B**		original / alternative
1.6	07.95 - 08.97	74	1595	4	AEK	**T104C**	**T084B**		original / alternative
	07.95 - 08.97	74	1595	4	AFT/AKS	**T800C**	**T064B**		original / alternative
1.8	11.91 - 08.97	55	1781	4	AAM	**T821C**	**T040B**		original / alternative
1.8	11.91 - 08.97	66	1781	4	ACC/ADZ	**T651C**	**T036B**		original / alternative
	11.91 - 08.97	66	1781	4	ABS	**T821C**	**T040B**		original / alternative
1.8 Syncro	01.93 - 08.97	66	1781	4	ADZ	**T651C**	**T036B**		original / alternative
	01.93 - 08.97	66	1781	4	ABS	**T821C**	**T040B**		original / alternative
2.0	11.91 - 08.97	85	1984	4	ADY/AKR/AGG	**T651C**	**T036B**		original / alternative
2.0 GTI 16V	08.92 - 08.97	110	1984	4	ABF	**T601C**	**T016B**		original / alternative
2.0 Syncro	08.95 - 08.97	85	1984	4	AGG	**T651C**	**T036B**		original / alternative
2.8 VR6	01.92 - 08.97	128	2792	6	AAA	**T801C**	**T060B**		orig. / alter., with distributor
	01.92 - 08.97	128	2792	6	AAA	**T823C**	**T062B**		orig. / alter., without distrib.
2.9 VR6 Syncro	10.94 - 08.97	140	2861	6	ABV	**T918C**	**T063B**		orig. / alter., with distributor
	10.94 - 08.97	140	2861	6	ABV	**T823C**	**T062B**		orig. / alter., without distrib.
Golf III Cabriolet (1E7)									
1.6	10.94 - 05.98	74	1595	4	AEK	**T104C**	**T084B**		original / alternative
	10.94 - 05.98	74	1595	4	AFT/AKS	**T800C**	**T064B**		original / alternative
1.8	07.93 - 05.98	55	1781	4	AAM	**T821C**	**T040B**		original / alternative
1.8	07.93 - 05.98	66	1781	4	ADZ	**T651C**	**T036B**		original / alternative
	07.93 - 05.98	66	1781	4	ABS	**T821C**	**T040B**		original / alternative
2.0	07.93 - 05.98	85	1984	4	ADY/AKR/AGG	**T651C**	**T036B**		original / alternative
Golf III Variant (1H5)									
1.4	07.93 - 04.99	40	1390	4	ABD	**T820C**	**T054B**		original / alternative
1.4	07.93 - 04.99	44	1390	4	AEX/APQ	**T654C**	**T045B**		original / alternative
	07.93 - 04.99	44	1390	4	ABD	**T820C**	**T054B**		original / alternative
1.6	07.93 - 12.97	55	1598	4	ABU/AEA/AEE	**T654C**	**T045B**		original / alternative
1.6	07.94 - 04.99	74	1595	4	AFT/AKS	**T800C**	**T064B**		original / alternative
1.8	07.93 - 04.99	55	1781	4	ANN/AAM	**T821C**	**T040B**		original / alternative
1.8	07.93 - 04.99	66	1781	4	ADZ	**T651C**	**T036B**		original / alternative
	07.93 - 04.99	66	1781	4	ANP	**T821C**	**T040B**		original / alternative
1.8 Syncro	10.94 - 04.99	66	1781	4	ADZ	**T651C**	**T036B**		original / alternative
2.0	07.93 - 04.99	85	1984	4	ADY/AKR/AGG	**T651C**	**T036B**		original / alternative
2.0 Syncro	08.95 - 04.99	85	1984	4	AGG	**T651C**	**T036B**		original / alternative
2.9 VR6	10.94 - 04.99	140	2861	6	ABV	**T918C**	**T063B**		orig. / alter., with distributor
	10.94 - 04.99	140	2861	6	ABV	**T823C**	**T062B**		orig. / alter., without distrib.
2.9 VR6 Syncro	10.94 - 04.99	140	2861	6	ABV	**T918C**	**T063B**		orig. / alter., with distributor
	10.94 - 04.99	140	2861	6	ABV	**T823C**	**T062B**		orig. / alter., without distrib.
Golf IV (1J1)									
1.4 16V	08.97 - 06.05	55	1390	4	AHW/AXP/APE/AKQ	**T874C**	**T004B**		original / alternative
1.6	08.97 - 05.04	74	1595	4	AKL/APF/AEH	**T854C**	**T076B**		original / alternative
1.6	08.00 - 06.05	75	1595	4	AVU/BFQ	**T854C**	**T076B**		original / alternative
1.6 16V	02.00 - 06.05	77	1598	4	AUS/ATN	**T874C**	**T004B**		original / alternative
1.8	08.97 - 06.05	92	1781	4	AGN	**T559C**			
1.8 4motion	05.98 - 06.05	92	1781	4	AGN	**T559C**			
2.0	07.98 - 05.04	85	1984	4	APK/AQY	**T855C**	**T077B**		original / alternative
	07.98 - 05.04	85	1984	4	AZJ/AZG	**T856C**	**T078B**		original / alternative
2.0 4motion	10.00 - 06.05	85	1984	4	AZH	**T855C**	**T077B**		original / alternative
	10.00 - 06.05	85	1984	4	AZJ	**T856C**	**T078B**		original / alternative
2.3 V5	08.97 - 10.00	110	2324	5	AGZ	**T153C**	**T081B**		original / alternative
2.3 V5 4motion	12.98 - 04.99	110	2324	5	AGZ	**T153C**	**T081B**		original / alternative
2.8 V6 4motion	05.99 - 04.01	150	2792	6	AQP/AUE	**T165C**			
Golf IV Cabriolet (1E7)									
1.6	06.98 - 06.02	74	1595	4	AFT/AKS	**T800C**	**T064B**		original / alternative
1.8	06.98 - 06.02	55	1781	4	ANN/AAM	**T821C**	**T040B**		original / alternative
1.8	06.98 - 06.02	66	1781	4	ADZ/ANP	**T651C**	**T036B**		original / alternative
2.0	06.98 - 06.02	85	1984	4	AKR/AGG	**T651C**	**T036B**		original / alternative
	06.98 - 06.02	85	1984	4	ATU	**T874C**	**T004B**		original / alternative
Golf IV Variant (1J5)									
1.4 16V	05.99 - 06.06	55	1390	4	AHW/AXP/APE/AKQ	**T874C**	**T004B**		original / alternative
1.6	05.99 - 04.02	74	1595	4	AKL/APF/AEH	**T854C**	**T076B**		original / alternative
1.6	08.00 - 06.06	75	1595	4	AVU/BFQ	**T854C**	**T076B**		original / alternative
1.6 16V	02.00 - 06.06	77	1598	4	AUS/ATN	**T874C**	**T004B**		original / alternative
1.8 4motion	05.99 - 06.06	92	1781	4	AGN	**T559C**			
2.0	05.99 - 06.06	85	1984	4	APK/AQY	**T855C**	**T077B**		original / alternative
	05.99 - 06.06	85	1984	4	AZJ	**T856C**	**T078B**		original / alternative

VW Golf IV Variant (1J5) ▶

model	year	kW	cm³	cyl	engine	I	II	III	info
Golf IV Variant (1J5)									
2.0 4motion	10.00 - 06.06	85	1984	4	AZH	**T855C**	**T077B**		original / alternative
	10.00 - 06.06	85	1984	4	AZJ	**T856C**	**T078B**		original / alternative
2.0 BiFuel	02.02 - 06.06	85	1984	4	BEH	**T856C**	**T078B**		original / alternative
2.3 V5	05.99 - 04.00	110	2324	5	AGZ	**T102C**	**T095B**		original / alternative
	05.00 - 02.01	110	2324	5	AGZ	**T659C**			
2.3 V5 4motion	05.99 - 04.00	110	2324	5	AGZ	**T102C**	**T095B**		original / alternative
	05.00 - 02.01	110	2324	5	AGZ	**T659C**			
2.8 V6 4motion	05.99 - 04.01	150	2792	6	AQP/AUE	**T165C**			
Golf V (1K1)									
1.6	01.04 - 11.08	75	1595	4	BGU/BSF/BSE	**T854C**	**T076B**		original / alternative
Golf V Variant (1K5)									
1.6	06.07 -	75	1595	4	CCSA/BSF/BSE	**T854C**	**T076B**		original / alternative
Golf VI (5K1)									
1.2 TSI	05.10 - 11.12	63	1197	4	CBZA	**T406C**	**T056B**		original / alternative
1.2 TSI	05.09 - 11.12	77	1197	4	CBZB	**T406C**	**T056B**		original / alternative
1.6	10.08 - 11.12	75	1595	4	CCSA/BSF/CMXA/BSE	**T854C**	**T076B**		original / alternative
1.6 BiFuel	03.09 - 11.12	75	1595	4	CHGA	**T854C**	**T076B**		original / alternative
1.6 MultiFuel	10.08 - 11.12	75	1595	4	CCSA/CMXA	**T854C**	**T076B**		original / alternative
Golf VI Cabriolet (517)									
1.2 TSI	03.11 -	77	1197	4	CBZB	**T406C**	**T056B**		original / alternative
Golf VI Variant (AJ5)									
1.2 TSI	07.10 -	63	1197	4	CBZA	**T406C**	**T056B**		original / alternative
1.2 TSI	08.09 -	77	1197	4	CBZB	**T406C**	**T056B**		original / alternative
Golf Plus (5M1, 521)									
1.2 TSI	11.09 -	77	1197	4	CBZB	**T406C**	**T056B**		original / alternative
1.6	05.05 -	75	1595	4	CCSA/BSF/CMXA/BSE	**T854C**	**T076B**		original / alternative
1.6 BiFuel	05.09 -	75	1595	4	CHGA	**T854C**	**T076B**		original / alternative
1.6 MultiFuel	11.07 -	75	1595	4	CCSA/CMXA	**T854C**	**T076B**		original / alternative
Jetta I (16)									
1.1	08.78 - 02.84	37	1093	4	GG/FA	**T732B**			
1.3	08.82 - 02.84	43	1272	4	GS	**T732B**			
1.3	08.79 - 02.84	44	1272	4	GF	**T732B**			
Jetta II (19E, 1G2, 165)									
1.3	01.84 - 06.87	40	1272	4	HK	**T649C**	**T044B**	**T730B**	orig. / alter. / suppl.
1.3 cat	06.87 - 12.91	40	1272	4	NZ/2G	**T649C**	**T044B**	**T730B**	orig. / alter. / suppl.
1.6	10.86 - 10.91	51	1595	4	PN	**T650C**	**T035B**	**T731B**	orig. / alter. / suppl.
1.6	03.86 - 10.91	53	1595	4	RF	**T650C**	**T035B**	**T731B**	orig. / alter. / suppl.
1.6	01.84 - 07.92	55	1595	4	HM/EZ	**T650C**	**T035B**	**T731B**	orig. / alter. / suppl.
1.8	08.86 - 01.90	62	1781	4	RH	**T650C**	**T035B**	**T731B**	orig. / alter. / suppl.
1.8	08.84 - 10.91	66	1781	4	GX/GU/HV	**T650C**	**T035B**	**T731B**	orig. / alter. / suppl.
1.8	08.85 - 10.87	79	1781	4	RD	**T650C**	**T035B**	**T731B**	orig. / alter. / suppl.
1.8	01.84 - 10.91	82	1781	4	EV/GZ/PB	**T650C**	**T035B**	**T731B**	orig. / alter. / suppl.
1.8 16V	08.86 - 10.91	95	1781	4	PL	**T714C**	**T017B**		original / alternative
1.8 16V	06.87 - 12.89	102	1781	4	KR	**T714C**	**T017B**		original / alternative
1.8 cat	08.87 - 10.91	66	1781	4	GX/RP	**T650C**	**T035B**	**T731B**	orig. / alter. / suppl.
1.8 cat	01.87 - 10.91	79	1781	4	PF	**T650C**	**T035B**	**T731B**	orig. / alter. / suppl.
1.8 Syncro	08.87 - 07.88	62	1781	4	RH	**T650C**	**T035B**	**T731B**	orig. / alter. / suppl.
1.8 Syncro	08.87 - 12.88	66	1781	4	RP/GU	**T650C**	**T035B**	**T731B**	orig. / alter. / suppl.
1.8 Syncro	08.88 - 07.91	72	1781	4	1P	**T650C**	**T035B**	**T731B**	orig. / alter. / suppl.
Jetta III (1K2)									
1.6	10.05 - 10.10	75	1595	4	/BSF/BSE	**T854C**	**T076B**		original / alternative
1.6 MultiFuel	01.08 - 10.10	75	1595	4	CCSA	**T854C**	**T076B**		original / alternative
Jetta IV (162)									
1.2 TSI	02.11 -	77	1197	4	CBZB	**T406C**	**T056B**		original / alternative
2.0	06.10 -	85	1984	4	CKJA/CBPA	**T856C**	**T078B**		original / alternative
LT 28-35 I Bus, Flatbed, Van (281-363)									
2.4	12.82 - 07.92	66	2383	6	DL	**T662C**	**T037B**		original / alternative
2.4 i	08.89 - 06.96	69	2383	6	1E	**T662C**	**T037B**		original / alternative
LT 28-35 II Bus, Flatbed, Van (2DM)									
2.3	05.96 - 07.06	105	2295	4	AGL	**T982C**	**T010B**		orig. / alter.-semidirect
LT 40-55 I Flatbed (293-909)									
2.4	08.85 - 07.89	66	2383	6	DL	**T662C**	**T037B**		original / alternative
2.4 i	03.94 - 06.96	69	2383	6	1E	**T662C**	**T037B**		original / alternative
2.4 Syncro	12.82 - 07.89	66	2383	6	DL	**T662C**	**T037B**		original / alternative
LT 40-55 I Van (291-512)									
2.4	12.82 - 07.92	66	2383	6	DL	**T662C**	**T037B**		original / alternative
2.4 4WD	12.82 - 07.92	66	2383	6	DL	**T662C**	**T037B**		original / alternative
2.4 i	01.93 - 06.96	69	2383	6	1E	**T662C**	**T037B**		original / alternative

VW Lupo (6X1, 6E1)

model	year	kW	cm³	cyl	engine	I	II	III	info
Lupo (6X1, 6E1)									
1.0	09.98 - 07.05	37	999	4	ALD/ANV/AUC	**T578C**	**T074B**		original / alternative
	09.98 - 07.05	37	999	4	AER/ALL	**T865C**	**T055B**		original / alternative
1.4	10.00 - 07.05	44	1390	4	AUD	**T578C**	**T074B**		original / alternative
1.4 16V	09.98 - 07.05	55	1390	4	AHW/APE/AKQ/AUA	**T874C**	**T004B**		original / alternative
1.4 16V	08.99 - 07.05	74	1390	4	AFK/AUB/AQQ	**T874C**	**T004B**		original / alternative
1.6 GTI	09.00 - 07.05	92	1598	4	AVY	**T874C**	**T004B**		original / alternative
Multivan V (7HM, 7HN, 7HF, 7EF, 7EM, 7EN)									
2.0	11.03 -	85	1984	4	AXA	**T854C**	**T076B**		original / alternative
New Beetle (9C1, 1C1)									
1.6	10.99 - 09.00	74	1595	4	AWH	**T855C**	**T077B**		original / alternative
1.6	06.00 -	75	1595	4	AYD/BFS	**T854C**	**T076B**		original / alternative
2.0	01.98 -	85	1984	4	AVH	**T855C**	**T077B**		original / alternative
	01.98 -	85	1984	4	AZG	**T856C**	**T078B**		original / alternative
3.2 RSI 4motion	04.00 - 05.01	165	3188	6	AXJ	**T823C**	**T062B**		original / alternative
New Beetle Cabriolet (1Y7)									
1.6	01.03 - 09.10	75	1595	4	BFS	**T854C**	**T076B**		original / alternative
2.0	09.02 - 10.10	85	1984	4	AZJ	**T856C**	**T078B**		original / alternative
Passat (32B)									
1.3	08.80 - 07.83	40	1272	4	FY	**T732B**			
1.3	08.80 - 07.86	44	1272	4	FZ	**T732B**			
1.3	08.80 - 07.86	44	1297	4	EP	**T649C**	**T044B**	**T730B**	orig. / alter. / suppl.
1.6	08.87 - 03.88	51	1588	4	PP	**T650C**	**T035B**	**T731B**	orig. / alter. / suppl.
1.6	02.86 - 03.88	53	1595	4	RL	**T650C**	**T035B**	**T731B**	orig. / alter. / suppl.
1.6	01.85 - 03.88	55	1588	4	WV/YN	**T650C**	**T035B**	**T731B**	orig. / alter. / suppl.
1.6	08.80 - 03.88	55	1595	4	DT	**T650C**	**T035B**	**T731B**	orig. / alter. / suppl.
1.8	05.86 - 03.88	64	1781	4	RM	**T650C**	**T035B**	**T731B**	orig. / alter. / suppl.
1.8	01.83 - 03.88	66	1781	4	DS/JN/JV	**T650C**	**T035B**	**T731B**	orig. / alter. / suppl.
2.0	08.83 - 03.88	85	1994	5	JS	**T700C**	**T050B**	**T429B**	orig. / alter. / suppl.
2.2	08.85 - 03.88	85	2226	5	KX	**T700C**	**T050B**	**T429B**	orig. / alter. / suppl.
2.2	01.85 - 03.88	100	2226	5	KV	**T700C**	**T050B**	**T429B**	orig. / alter. / suppl.
Passat (3A2, 35I)									
1.6	02.88 - 09.91	53	1595	4	EZ /1F	**T650C**	**T035B**	**T731B**	orig. / alter. / suppl.
1.6	02.88 - 12.88	55	1595	4	ABN/EZ	**T650C**	**T035B**	**T731B**	orig. / alter. / suppl.
1.6	10.94 - 08.96	74	1595	4	AEK	**T104C**	**T084B**		original / alternative
	10.94 - 08.96	74	1595	4	AFT	**T802C**	**T065B**		original / alternative
1.8	08.90 - 08.96	55	1781	4	AAM	**T650C**	**T035B**	**T731B**	orig. / alter. / suppl.
1.8	02.88 - 08.96	66	1781	4	RP/ADZ	**T650C**	**T035B**	**T731B**	orig. / alter. / suppl.
1.8	04.88 - 07.93	79	1781	4	PF	**T650C**	**T035B**	**T731B**	orig. / alter. / suppl.
1.8	04.88 - 07.92	82	1781	4	PB	**T650C**	**T035B**	**T731B**	orig. / alter. / suppl.
1.8 16V	04.88 - 12.89	100	1781	4	KR	**T714C**	**T017B**		original / alternative
1.8 G60 Syncro	08.88 - 08.96	118	1781	4	PG	**T650C**	**T035B**	**T731B**	orig. / alter. / suppl.
2.0	02.90 - 08.96	85	1984	4	2E	**T821C**	**T040B**		original / alternative
2.0	03.95 - 08.96	79	1984	4	AEP	**T821C**	**T040B**		original / alternative
2.0 16V	08.88 - 09.93	100	1984	4	9A	**T714C**	**T017B**		original / alternative
2.0 16V	01.94 - 08.96	110	1984	4	ABF	**T922C**	**T019B**		original / alternative
2.0 Syncro	10.90 - 08.96	85	1984	4	2E	**T821C**	**T040B**		original / alternative
2.8 VR6	06.91 - 08.96	128	2792	6	AAA	**T801C**	**T060B**		orig. / alter., with distributor
	06.91 - 08.96	128	2792	6	AAA	**T823C**	**T062B**		orig. / alter., without distrib.
Passat (3B2)									
1.6	10.96 - 11.00	74	1595	4	AHL/ARM/ANA	**T854C**	**T076B**		original / alternative
	10.96 - 11.00	74	1595	4	ADP	**T952C**	**T068B**		original / alternative
1.8	10.96 - 11.00	92	1781	4	ADR/APT/ARG	**T594C**	**T088B**		orig. / alter.-semidirect
1.8 Syncro/4motion	10.96 - 11.00	92	1781	4	ADR/APT/ARG	**T594C**	**T088B**		orig. / alter.-semidirect
2.3 VR5	10.96 - 08.97	110	2324	5	AGZ	**T101C**	**T083B**		original / alternative
2.3 VR5 Sync./4mot.	09.97 - 04.98	110	2324	5	AGZ	**T102C**	**T095B**		original / alternative
	05.98 - 11.00	110	2324	5	AGZ	**T659C**			
2.8 Syncro	05.97 - 09.99	132	2771	6	AGE	**T887C**	**T003B**		original / alternative
2.8 V6	05.97 - 09.99	132	2771	6	AGE	**T887C**	**T003B**		original / alternative
2.8 V6	09.99 - 11.00	140	2771	6	BBG	**T887C**	**T003B**		original / alternative
2.8 V6	08.96 - 11.00	142	2771	6	APR/ACK/AHA/AQD	**T887C**	**T003B**		original / alternative
2.8 V6 Sync./4mot.	10.96 - 11.00	142	2771	6	APR/ACK/ALG/AHA/AQD	**T887C**	**T003B**		original / alternative
Passat (3B3)									
1.6	11.00 - 05.05	75	1595	4	ALZ	**T854C**	**T076B**		original / alternative
2.0	11.00 - 05.05	85	1984	4	AZM	**T854C**	**T076B**		original / alternative
2.0 4motion	11.00 - 05.05	85	1984	4	AZM	**T854C**	**T076B**		original / alternative
2.8	05.02 - 05.03	142	2771	6	ATQ/AMX	**T887C**	**T003B**		original / alternative
2.8 4motion	11.00 - 05.05	142	2771	6	ATQ/AMX	**T887C**	**T003B**		original / alternative
Passat (3C2)									
1.6	05.05 - 07.10	75	1595	4	BSF/BSE	**T854C**	**T076B**		original / alternative

VW Passat Sedan (32B) ▶

model	year	kW	cm³	cyl	engine	I	II	III	info
Passat Sedan (32B)									
1.6	01.85 - 03.88	53	1595	4	RL	**T650C**	**T035B**	**T731B**	orig. / alter. / suppl.
1.6	01.85 - 03.88	55	1595	4	DT	**T650C**	**T035B**	**T731B**	orig. / alter. / suppl.
1.6	08.87 - 03.88	51	1588	4	PP	**T650C**	**T035B**	**T731B**	orig. / alter. / suppl.
1.8	01.85 - 03.88	66	1781	4	DS/JN	**T650C**	**T035B**	**T731B**	orig. / alter. / suppl.
1.8	05.86 - 03.88	64	1781	4	RM	**T650C**	**T035B**	**T731B**	orig. / alter. / suppl.
2.0	08.84 - 07.85	85	1994	5	JS/HP	**T700C**	**T050B**	**T429B**	orig. / alter. / suppl.
2.2	01.85 - 03.88	85	2226	5	KX	**T700C**	**T050B**	**T429B**	orig. / alter. / suppl.
Passat Variant (32B)									
1.3	08.80 - 07.83	40	1272	4	FY	**T732B**			
1.3	08.80 - 07.86	44	1272	4	FZ	**T732B**			
1.3	08.80 - 07.86	44	1297	4	EP	**T649C**	**T044B**	**T730B**	orig. / alter. / suppl.
1.6	08.87 - 03.88	51	1588	4	PP	**T650C**	**T035B**	**T731B**	orig. / alter. / suppl.
1.6	02.86 - 03.88	53	1595	4	RL	**T650C**	**T035B**	**T731B**	orig. / alter. / suppl.
1.6	01.85 - 03.88	55	1588	4	WV/YN	**T650C**	**T035B**	**T731B**	orig. / alter. / suppl.
1.6	08.80 - 03.88	55	1595	4	DT	**T650C**	**T035B**	**T731B**	orig. / alter. / suppl.
1.8	05.86 - 03.88	64	1781	4	RM	**T650C**	**T035B**	**T731B**	orig. / alter. / suppl.
1.8	01.83 - 03.88	66	1781	4	DS/JN/JV	**T650C**	**T035B**	**T731B**	orig. / alter. / suppl.
1.8 Syncro	01.86 - 03.88	66	1781	4	DS/JN	**T650C**	**T035B**	**T731B**	orig. / alter. / suppl.
2.0	08.83 - 03.88	85	1994	5	JS/HP	**T700C**	**T050B**	**T429B**	orig. / alter. / suppl.
2.0 Syncro	05.84 - 03.88	85	1994	5	JS	**T700C**	**T050B**	**T429B**	orig. / alter. / suppl.
2.2	08.85 - 03.88	85	2226	5	KX	**T700C**	**T050B**	**T429B**	orig. / alter. / suppl.
2.2	01.85 - 03.88	100	2226	5	KV	**T700C**	**T050B**	**T429B**	orig. / alter. / suppl.
2.2 Syncro	08.85 - 03.88	88	2226	5	JT	**T700C**	**T050B**	**T429B**	orig. / alter. / suppl.
Passat Variant (3A5, 35I)									
1.6	04.88 - 09.91	53	1595	4	EZ /1F	**T650C**	**T035B**	**T731B**	orig. / alter. / suppl.
1.6	04.88 - 12.88	55	1595	4	EZ	**T650C**	**T035B**	**T731B**	orig. / alter. / suppl.
1.6	07.94 - 12.95	74	1595	4	AFT	**T802C**	**T065B**		original / alternative
1.8	08.90 - 05.97	55	1781	4	AAM	**T650C**	**T035B**	**T731B**	orig. / alter. / suppl.
1.8	02.88 - 05.97	66	1781	4	RP/ADZ	**T650C**	**T035B**	**T731B**	orig. / alter. / suppl.
1.8	04.88 - 07.90	79	1781	4	PF	**T650C**	**T035B**	**T731B**	orig. / alter. / suppl.
1.8	04.88 - 07.92	82	1781	4	PB	**T650C**	**T035B**	**T731B**	orig. / alter. / suppl.
1.8 16V	04.88 - 12.89	100	1781	4	KR	**T714C**	**T017B**		original / alternative
1.8 G60 Syncro	08.88 - 05.97	118	1781	4	PG	**T650C**	**T035B**	**T731B**	orig. / alter. / suppl.
2.0	02.90 - 05.97	85	1984	4	2E	**T821C**	**T040B**		original / alternative
2.0	03.95 - 08.96	79	1984	4	AEP	**T821C**	**T040B**		original / alternative
2.0 16V	08.88 - 09.93	100	1984	4	9A	**T714C**	**T017B**		original / alternative
2.0 16V	01.94 - 05.97	110	1984	4	ABF	**T922C**	**T019B**		original / alternative
2.0 Syncro	10.90 - 05.97	85	1984	4	2E	**T821C**	**T040B**		original / alternative
2.8 VR6	06.91 - 05.97	128	2792	6	AAA	**T801C**	**T060B**		orig. / alter., with distributor
	06.91 - 05.97	128	2792	6	AAA	**T823C**	**T062B**		orig. / alter., without distrib.
2.9 VR6 Syncro	01.94 - 05.97	135	2861	6	ABV	**T823C**	**T062B**		orig. / alter., with distributor
	01.94 - 05.97	135	2861	6	ABV	**T918C**	**T063B**		orig. / alter., without distrib.
Passat Variant (3B5)									
1.6	06.97 - 11.00	74	1595	4	AHL/ARM/ANA	**T854C**	**T076B**		original / alternative
	06.97 - 11.00	74	1595	4	ADP	**T952C**	**T068B**		original / alternative
1.8	06.97 - 11.00	92	1781	4	ADR/APT/ARG	**T594C**	**T088B**		orig. / alter.-semidirect
1.8 Syncro/4motion	06.97 - 11.00	92	1781	4	ADR/APT/ARG	**T594C**	**T088B**		orig. / alter.-semidirect
2.3 VR5	06.97 - 08.97	110	2324	5	AGZ	**T101C**	**T083B**		original / alternative
	09.97 - 04.98	110	2324	5	AGZ	**T102C**	**T095B**		original / alternative
	04.98 - 11.00	110	2324	5	AGZ	**T659C**			
2.3 VR5 Sync./4mot.	10.97 - 11.00	110	2324	5	AGZ	**T101C**	**T083B**		original / alternative
2.8 Syncro	05.97 - 09.99	132	2771	6	AGE	**T887C**	**T003B**		original / alternative
2.8 V6	09.97 - 09.99	132	2771	6	AGE	**T887C**	**T003B**		original / alternative
2.8 V6	06.97 - 11.00	142	2771	6	APR/ACK/AHA/AQD	**T887C**	**T003B**		original / alternative
2.8 V6 Sync./4mot.	06.97 - 11.00	142	2771	6	APR/ACK/ALG/AHA/AQD	**T887C**	**T003B**		original / alternative
Passat Variant (3B6)									
1.6	11.00 - 05.05	75	1595	4	ALZ	**T854C**	**T076B**		original / alternative
2.0	11.00 - 05.05	85	1984	4	AZM	**T854C**	**T076B**		original / alternative
2.0 4motion	11.00 - 05.05	85	1984	4	AZM	**T854C**	**T076B**		original / alternative
2.8 4motion	11.00 - 05.05	142	2771	6	ATQ/AMX	**T887C**	**T003B**		original / alternative
Passat Variant (3C5)									
1.6	08.05 - 11.10	75	1595	4	BSF/BSE	**T854C**	**T076B**		original / alternative
Polo (86)									
1.1	03.75 - 09.81	37	1093	4	HB	**T732B**			
1.3	12.76 - 09.81	44	1272	4	HH	**T732B**			
Polo (86C, 80)									
1.0	05.84 - 10.86	29	1043	4	GL	**T646C**	**T043B**		original / alternative
1.0	08.85 - 01.92	33	1043	4	HZ	**T646C**	**T043B**		original / alternative
1.0 cat	08.89 - 09.94	33	1043	4	AAU/ACM	**T646C**	**T043B**		original / alternative
1.3	08.83 - 07.88	40	1272	4	MH	**T646C**	**T043B**		original / alternative

VW Polo (86C, 80) ▶

model	year	kW	cm³	cyl	engine	I	II	III	info
Polo (86C, 80)									
1.3	06.84 - 09.89	55	1272	4	GK	**T646C**	**T043B**		original / alternative
1.3 cat	07.87 - 09.94	40	1272	4	NZ/2G	**T646C**	**T043B**		original / alternative
1.3 cat	10.89 - 11.90	55	1272	4	3F	**T646C**	**T043B**		original / alternative
Polo (6N1)									
45 1.0	10.94 - 09.96	33	1043	4	AEV	**T654C**	**T045B**		original / alternative
50 1.0	09.96 - 10.99	37	999	4	AER/ALL	**T819C**	**T053B**		original / alternative
55 1.3	10.94 - 07.95	40	1296	4	ADX	**T654C**	**T045B**		original / alternative
55 1.4	08.95 - 10.99	40	1390	4	AEX	**T658C**	**T048B**		original / alternative
60 1.4	07.95 - 10.99	44	1390	4	AEX	**T658C**	**T048B**		original / alternative
	07.95 - 10.99	44	1390	4	AKV	**T865C**	**T055B**		original / alternative
75 1.6	10.94 - 10.99	55	1598	4	AEA/AEE	**T654C**	**T045B**		original / alternative
100 1.4 16V	04.96 - 10.99	74	1390	4	AFH	**T842C**	**T006B**		original / alternative
120 1.6 16V GTI	09.98 - 10.99	88	1598	4	AJV	**T874C**	**T004B**		original / alternative
Polo (6N2)									
1.0	10.99 - 09.01	37	999	4	ALD/AUC	**T857C**	**T079B**		original / alternative
1.4	10.99 - 09.01	40	1390	4	ANX/AKP	**T857C**	**T079B**		original / alternative
1.4	10.99 - 09.01	44	1390	4	AUD	**T578C**	**T074B**		original / alternative
1.4 16V	10.99 - 09.01	55	1390	4	AHW/APE/AUA	**T874C**	**T004B**		original / alternative
1.4 16V	10.99 - 09.01	74	1390	4	AFK/AUB/AQQ	**T874C**	**T004B**		original / alternative
1.6 16V GTI	10.99 - 09.01	92	1598	4	AVY	**T874C**	**T004B**		original / alternative
Polo (9N_)									
1.4 16V	10.01 - 05.08	55	1390	4	BBY/BKY/AUA	**T874C**	**T004B**		original / alternative
1.6	08.02 - 05.05	74	1598	4	BAH	**T387C**	**T098B**		original /alternative
Polo (6R_)									
1.2 TSI	05.11 -	66	1197	4	CBZC	**T406C**	**T056B**		original / alternative
1.2 TSI	11.09 -	77	1197	4	CBZB	**T406C**	**T056B**		original / alternative
Polo Classic (86C, 80)									
1.0	01.85 - 10.86	29	1043	4	GL	**T646C**	**T043B**		original / alternative
1.0	08.86 - 09.94	33	1043	4	AAU/HZ/AAK	**T646C**	**T043B**		original / alternative
1.3	08.85 - 07.87	40	1272	4	MH/HK	**T646C**	**T043B**		original / alternative
1.3 cat	07.87 - 09.94	40	1272	4	NZ/MH	**T646C**	**T043B**		original / alternative
Polo Classic (6KV2)									
1.0	08.96 - 12.01	37	999	4	AER	**T642C**	**T042B**		original / alternative
60 1.4	12.95 - 09.01	44	1390	4	AKK/AUD	**T578C**	**T074B**		original / alternative
	12.95 - 09.01	44	1390	4	AEX	**T658C**	**T048B**		original / alternative
	12.95 - 09.01	44	1390	4	AKV	**T865C**	**T055B**		original / alternative
75 1.4 16V	10.99 - 09.01	55	1390	4	APE/AUA	**T874C**	**T004B**		original / alternative
75 1.6	11.95 - 09.01	55	1598	4	ALM/AEE	**T650C**	**T035B**	**T731B**	orig. / alter. / suppl.
75 1.6	11.95 - 09.97	55	1595	4	1F	**T650C**	**T035B**	**T731B**	orig. / alter. / suppl.
90 1.8	01.97 - 09.01	66	1781	4	ADZ/ADD/ABS	**T651C**	**T036B**		original / alternative
100 1.6	12.95 - 09.01	74	1595	4	AEH/AKL	**T674C**	**T059B**		original / alternative
	12.95 - 09.01	74	1595	4	AFT	**T802C**	**T065B**		original / alternative
Polo Coupe (86C, 80)									
1.0	06.84 - 10.86	29	1043	4	GL	**T646C**	**T043B**		original / alternative
1.0	08.85 - 01.92	33	1043	4	HZ	**T646C**	**T043B**		original / alternative
1.0 cat	08.89 - 09.94	33	1043	4	AAU/AAK/ACM	**T646C**	**T043B**		original / alternative
1.3	08.85 - 06.87	40	1272	4	MH/HK	**T646C**	**T043B**		original / alternative
1.3	06.84 - 09.89	55	1272	4	GK	**T646C**	**T043B**		original / alternative
1.3	03.91 - 09.94	57	1272	4	3F	**T646C**	**T043B**		original / alternative
1.3 cat	07.87 - 08.94	40	1272	4	NZ/2G/MH/AAV	**T646C**	**T043B**		original / alternative
1.3 cat	10.89 - 11.90	55	1272	4	3F	**T646C**	**T043B**		original / alternative
1.3 G40	08.90 - 09.94	83	1272	4	PY	**T646C**	**T043B**		original / alternative
1.3 G40	01.87 - 08.90	85	1272	4	PY	**T646C**	**T043B**		original / alternative
Polo Sedan (9A4)									
1.0	08.96 - 12.01	37	999	4	AER	**T642C**	**T042B**		original / alternative
1.6	09.02 -	74	1598	4	BPA/CFZA/BAH	**T387C**	**T098B**		original /alternative
Polo Van (86CF)									
1.0	08.92 - 07.94	33	1043	4	AAU	**T646C**	**T043B**		original / alternative
1.3	08.92 - 07.94	40	1272	4	AAV	**T646C**	**T043B**		original / alternative
Polo Van (6NF)									
1.0	10.94 - 12.99	33	1043	4	AAU	**T646C**	**T043B**		original / alternative
1.4	05.98 - 12.99	44	1390	4	AEX	**T658C**	**T048B**		original / alternative
Polo Variant (6KV5)									
1.4	12.98 - 09.01	40	1390	4	AKP	**T857C**	**T079B**		original / alternative
1.4	05.97 - 09.01	44	1390	4	AEX	**T658C**	**T048B**		original / alternative
	05.97 - 09.01	44	1390	4	AKV	**T865C**	**T055B**		original / alternative
	05.97 - 09.01	44	1390	4	AKK/AUD	**T578C**	**T074B**		original / alternative
1.4 16V	10.99 - 09.01	55	1390	4	APE/AUA	**T874C**	**T004B**		original / alternative
1.6	05.97 - 09.01	55	1598	4	ALM/AEE	**T650C**	**T035B**	**T731B**	orig. / alter. / suppl.

VW Polo Variant (6KV5) ▶

model	year	kW	cm³	cyl	engine	I	II	III	info
Polo Variant (6KV5)									
1.6	05.97 - 09.01	74	1595	4	AKL/AEH	**T674C**	**T059B**		original / alternative
	05.97 - 09.01	74	1595	4	AFT	**T802C**	**T065B**		original / alternative
1.8	05.97 - 09.01	66	1781	4	ADZ	**T651C**	**T036B**		original / alternative
Routan									
3.8	09.08 - 12.10	147	3778	6	CGUA	**T477B**			
Santana (32B)									
1.3 CX	08.84 - 12.85	44	1296	4	EP	**T650C**	**T035B**	**T731B**	orig. / alter. / suppl.
1.6	08.81 - 12.84	55	1595	4	DT	**T650C**	**T035B**	**T731B**	orig. / alter. / suppl.
1.8	01.83 - 12.84	66	1781	4	DS	**T650C**	**T035B**	**T731B**	orig. / alter. / suppl.
2.0	08.83 - 12.84	85	1994	5	JS/HP	**T700C**	**T050B**	**T429B**	orig. / alter. / suppl.
Scirocco (53B)									
1.6	04.86 - 07.90	53	1595	4	RE	**T650C**	**T035B**	**T731B**	orig. / alter. / suppl.
1.6	01.83 - 12.89	55	1595	4	EW	**T650C**	**T035B**	**T731B**	orig. / alter. / suppl.
1.8	08.83 - 07.92	66	1781	4	EX	**T650C**	**T035B**	**T731B**	orig. / alter. / suppl.
1.8	11.85 - 07.92	70	1781	4	JH	**T650C**	**T035B**	**T731B**	orig. / alter. / suppl.
1.8	08.82 - 12.89	82	1781	4	DX	**T650C**	**T035B**	**T731B**	orig. / alter. / suppl.
1.8 16V	03.86 - 07.92	95	1781	4	PL	**T714C**	**T017B**		original / alternative
1.8 16V	10.85 - 07.89	102	1781	4	KR	**T714C**	**T017B**		original / alternative
Sharan (7M8, 7M9, 7M6)									
2.0	09.95 - 03.10	85	1984	4	ADY	**T854C**	**T076B**		original / alternative
	09.95 - 03.10	85	1984	4	ATM	**T942C**	**T067B**		original / alternative
2.0 LPG	04.06 - 03.10	85	1984	4	ATM	**T855C**	**T077B**		original / alternative
2.8 VR6	09.95 - 04.00	128	2792	6	AAA	**T823C**	**T062B**		original / alternative
2.8 VR6 Syncro	11.96 - 04.00	128	2792	6	AAA	**T823C**	**T062B**		original / alternative
2.8 V6 24V	04.00 - 03.10	150	2792	6	AYL	**T165C**			
2.8 V6 24V 4motion	04.00 - 03.10	150	2792	6	AYL	**T165C**			
Touran (1T1, 1T2)									
1.6	07.03 - 05.10	75	1595	4	BGU/BSF/BSE	**T854C**	**T076B**		original / alternative
2.0 EcoFuel	02.06 - 05.09	80	1984	4	BSX	**T856C**	**T078B**		original / alternative
Touran (1T3)									
1.2 TSI	05.10 -	77	1197	4	CBZB	**T406C**	**T056B**		original / alternative
Transporter III Bus									
1.9	08.82 - 07.92	44	1913	4	DF	**T649C**	**T044B**	**T730B**	orig. / alter. / suppl.
1.9	08.82 - 07.92	57	1913	4	DG	**T649C**	**T044B**	**T730B**	orig. / alter. / suppl.
1.9	01.83 - 07.85	61	1913	4	DH	**T649C**	**T044B**	**T730B**	orig. / alter. / suppl.
1.9	08.83 - 07.85	66	1913	4	GW	**T649C**	**T044B**	**T730B**	orig. / alter. / suppl.
1.9 Syncro	02.85 - 07.92	57	1913	4	DG	**T649C**	**T044B**	**T730B**	orig. / alter. / suppl.
2.1	10.86 - 07.92	64	2109	4	SR	**T649C**	**T044B**	**T730B**	orig. / alter. / suppl.
2.1	08.85 - 07.92	70	2110	4	MV	**T649C**	**T044B**	**T730B**	orig. / alter. / suppl.
2.1	08.85 - 07.92	82	2110	4	DJ	**T649C**	**T044B**	**T730B**	orig. / alter. / suppl.
2.1 cat	06.89 - 07.92	70	2110	4	MV	**T649C**	**T044B**	**T730B**	orig. / alter. / suppl.
2.1 i	07.89 - 07.92	68	2110	4	SS	**T649C**	**T044B**	**T730B**	orig. / alter. / suppl.
2.1 Syncro	10.86 - 07.92	64	2109	4	SR	**T649C**	**T044B**	**T730B**	orig. / alter. / suppl.
2.1 Syncro	08.85 - 07.92	70	2110	4	MV	**T649C**	**T044B**	**T730B**	orig. / alter. / suppl.
2.1 Syncro	01.86 - 07.92	82	2110	4	DJ	**T649C**	**T044B**	**T730B**	orig. / alter. / suppl.
Transporter III Flatbed									
1.9	09.82 - 07.92	44	1913	4	DF	**T649C**	**T044B**	**T730B**	orig. / alter. / suppl.
1.9	08.82 - 07.92	57	1913	4	DG	**T649C**	**T044B**	**T730B**	orig. / alter. / suppl.
1.9	10.84 - 02.89	61	1913	4	DH	**T649C**	**T044B**	**T730B**	orig. / alter. / suppl.
1.9 Syncro	12.84 - 07.92	57	1913	4	DG	**T649C**	**T044B**	**T730B**	orig. / alter. / suppl.
2.1	08.85 - 07.92	70	2110	4	MV	**T649C**	**T044B**	**T730B**	orig. / alter. / suppl.
2.1	03.86 - 07.92	82	2110	4	DJ	**T649C**	**T044B**	**T730B**	orig. / alter. / suppl.
2.1 Syncro	08.85 - 07.92	70	2110	4	MV	**T649C**	**T044B**	**T730B**	orig. / alter. / suppl.
2.1 Syncro	03.86 - 07.92	82	2110	4	DJ	**T649C**	**T044B**	**T730B**	orig. / alter. / suppl.
Transporter III Van									
1.9	10.82 - 07.92	44	1913	4	DF	**T649C**	**T044B**	**T730B**	orig. / alter. / suppl.
1.9	10.82 - 07.92	57	1913	4	DG	**T649C**	**T044B**	**T730B**	orig. / alter. / suppl.
1.9	08.83 - 02.89	66	1913	4	GW	**T649C**	**T044B**	**T730B**	orig. / alter. / suppl.
1.9	10.84 - 02.89	61	1913	4	DH	**T649C**	**T044B**	**T730B**	orig. / alter. / suppl.
1.9 Syncro	11.84 - 07.92	57	1913	4	DG	**T649C**	**T044B**	**T730B**	orig. / alter. / suppl.
2.1	08.85 - 07.92	70	2110	4	MV	**T649C**	**T044B**	**T730B**	orig. / alter. / suppl.
2.1	03.86 - 07.92	82	2110	4	DJ	**T649C**	**T044B**	**T730B**	orig. / alter. / suppl.
2.1 i	07.89 - 07.92	68	2110	4	SS	**T649C**	**T044B**	**T730B**	orig. / alter. / suppl.
2.1 Syncro	08.85 - 07.92	70	2110	4	MV	**T649C**	**T044B**	**T730B**	orig. / alter. / suppl.
2.1 Syncro	03.86 - 07.92	82	2110	4	DJ	**T649C**	**T044B**	**T730B**	orig. / alter. / suppl.
Transporter IV Bus (70XB, 70XC, 7DB, 7DW)									
1.8	12.90 - 07.92	49	1781	4	PD	**T656C**	**T047B**		original / alternative
2.0	09.90 - 04.03	62	1968	4	AAC	**T656C**	**T047B**		original / alternative
2.5	11.90 - 04.03	81	2461	5	AEN/AAF/ACU/AEU	**T920C**	**T057B**		original / alternative
2.5	08.96 - 04.03	85	2461	5	AET	**T920C**	**T057B**		original / alternative

VW Transporter IV Bus (70XB, 70XC, 7DB, 7DW) ▶

model	year	kW	cm³	cyl	engine	I	II	III	info
Transporter IV Bus (70XB, 70XC, 7DB, 7DW)									
2.5 Syncro	11.92 - 04.03	81	2461	5	AEN/AAF/ACU/AEU	**T920C**	**T057B**		original / alternative
2.5 Syncro	07.96 - 04.03	85	2461	5	AET	**T920C**	**T057B**		original / alternative
2.8 VR 6	11.95 - 04.00	103	2792	6	AES	**T803C**	**T061B**		original / alternative
2.8 VR6 Syncro	01.96 - 04.96	103	2792	6	AES	**T803C**	**T061B**		original / alternative
2.8 VR6	04.00 - 04.03	150	2792	6	AMV	**T803C**	**T061B**		original / alternative
Transporter IV Flatbed (70XD)									
2.0	07.90 - 04.03	62	1968	4	AAC	**T656C**	**T047B**		original / alternative
2.5	11.90 - 04.03	81	2461	5	AEN/AAF/ACU/AEU	**T920C**	**T057B**		original / alternative
2.5	08.96 - 04.03	85	2461	5	AET	**T920C**	**T057B**		original / alternative
2.5 Syncro	10.92 - 04.03	81	2461	5	AEN/AAF/ACU/AEU	**T920C**	**T057B**		original / alternative
2.5 Syncro	08.96 - 04.03	85	2461	5	AET	**T920C**	**T057B**		original / alternative
2.8	05.96 - 05.00	103	2792	6	AES	**T803C**	**T061B**		original / alternative
Transporter IV Van (70XA)									
2.0	07.90 - 04.03	62	1968	4	AAC	**T656C**	**T047B**		original / alternative
2.5	11.90 - 04.03	81	2461	5	AEN/AAF/ACU/AEU	**T920C**	**T057B**		original / alternative
2.5	08.96 - 04.03	85	2461	5	AET	**T920C**	**T057B**		original / alternative
2.5 Syncro	10.92 - 04.03	81	2461	5	AEN/AAF/ACU/AEU	**T920C**	**T057B**		original / alternative
2.5 Syncro	08.96 - 04.03	85	2461	5	AET	**T920C**	**T057B**		original / alternative
2.8 VR6	05.96 - 05.00	103	2792	6	AES	**T803C**	**T061B**		original / alternative
2.8 VR6	06.00 - 04.03	150	2792	6	AMV	**T803C**	**T061B**		original / alternative
Transporter V Bus, Flatbed, Van (7_ _)									
2.0	11.03 -	85	1984	4	AXA	**T854C**	**T076B**		original / alternative
Vento (1H2)									
1.4	11.91 - 09.98	40	1390	4	ABD	**T649C**	**T044B**	**T730B**	orig. / alter. / suppl.
1.4	11.91 - 09.98	44	1390	4	ABD	**T649C**	**T044B**	**T730B**	orig. / alter. / suppl.
	11.91 - 09.98	44	1390	4	AEX	**T654C**	**T045B**		original / alternative
1.6	09.92 - 09.98	55	1598	4	ABU	**T649C**	**T044B**	**T730B**	orig. / alter. / suppl.
	09.92 - 09.98	55	1598	4	AEA/AEE	**T654C**	**T045B**		original / alternative
1.6	10.94 - 09.98	74	1595	4	AEK	**T104C**	**T084B**		original /alternative / engine code
	10.94 - 09.98	74	1595	4	AFT	**T800C**	**T064B**		original /alternative / engine code
1.8	11.91 - 09.98	55	1781	4	AAM	**T821C**	**T040B**		original / alternative
1.8	11.91 - 09.98	66	1781	4	ADZ	**T651C**	**T036B**		original / alternative
	11.91 - 09.98	66	1781	4	ABS	**T821C**	**T040B**		original / alternative
2.0	11.91 - 09.98	85	1984	4	ADY/AKR/AGG	**T651C**	**T036B**		original / alternative
2.8 VR6	01.92 - 09.98	128	2792	6	AAA	**T801C**	**T060B**		orig. / alter., with distributor
	01.92 - 09.98	128	2792	6	AAA	**T823C**	**T062B**		orig. / alter., without distrib.
WARTBURG									
353									
1.0	02.75 - 08.88	37	990	3	353.18	**T155 *)**			
1.3	09.88 - 05.91	43	1272	4	4VO7,2/7,5GRF	**T424S**			
353 Tourist									
1.0	02.75 - 08.88	37	990	3	353.18	**T155 *)**			
1.3	02.89 - 05.91	43	1272	4	4VO7,2/7,5GRF	**T424S**			
ZASTAVA									
101 (1100)									
1.1	12.75 - 01.80	37	1116	4	128A.000	**T346H**			
1.1	06.73 - 01.90	40	1116	4	128A.000	**T348H**			
1.1	05.75 - 12.93	41	1116	4	128AC5.000	**T346H**			
1.1 Super	07.79 - 09.81	47	1116	4	128AC5.000	**T346H**			
1.3	05.75 - 10.81	48	1290	4	128AR.000	**T346H**			
Yugo									
0.9	04.80 - 06.92	33	903	4	9A	**T346H**			
1.1	04.83 - 04.91	41	1116	4	128A4	**T344H**			
ZAZ									
Chance Hatchback									
1.3i 8V	07.09 - 06.14	49	1299	4	MeMZ-307	**T393B**			
1.5i 8V	07.09 - 06.14	63	1498	4	A15SMS	**T738B**	**T699B**		boot design
Chance Sedan									
1.3i 8V	07.09 - 06.14	49	1299	4	MeMZ-307	**T393B**			
1.4 i 16V	09.09 - 09.12	74	1399	4	F14D4	**T711B**			
1.5i 8V	07.09 - 06.14	63	1498	4	A15SMS	**T738B**	**T699B**		boot design
Dana (1105, 110540)									
1.1	01.94 - 01.97	38	1091	4	MeMZ-245	**T367S**	**T137H**	**T860M**	premium / basic / inductive
1.2	01.94 - 01.97	43	1197	4	MeMZ-2457	**T367S**	**T137H**	**T860M**	premium / basic / inductive
Forza Hatchback /A13A/									
1.5 i 16V	05.11 - 11.16	80	1497	4	SQR477F	**T360B**			

**) set with red 7 mm PVC cable, copper core*
комплект с красным 7 мм ПВХ проводом, медный сердечник
sada z červeného 7 mm PVC kabelu, měděné jádro

ZAZ Forza Sedan ▶

model	year	kW	cm³	cyl	engine	I	II	III	info
Forza Sedan /A13/									
1.5 i 16V	05.11 - 11.16	80	1497	4	SQR477F	**T360B**			
Lanos Hatchback									
1.3i 8V	01.98 - 01.09	55	1349	4	A13SMS	**T738B**	**T699B**		boot design
1.4i 16V	12.11 - 06.16	74	1399	4	F14D4	**T711B**			
1.5i	01.98 - 06.16	63	1498	4	A15SMS	**T738B**	**T699B**		boot design
1.6i 16V	01.97 - 06.16	77	1598	4	A16DMS	**T711B**			
Lanos Sedan									
1.3i 8V	01.98 - 01.09	55	1349	4	A13SMS	**T738B**	**T699B**		boot design
1.4i 16V	12.11 - 06.16	74	1399	4	F14D4	**T711B**			
1.5i 8V	01.98 - 06.16	63	1498	4	A15SMS	**T738B**	**T699B**		boot design
1.6i 16V	01.97 - 06.16	77	1598	4	A16DMS	**T711B**			
Lanos Pick Up									
1.3i	01.05 - 06.16	49	1299	4	MeMZ-307	**T395S**	**T684H**	**T514M**	premium / basic / inductive
1.3i 8V	01.05 - 06.16	55	1349	4	A13SMS	**T738B**	**T699B**		boot design
1.5i	01.05 - 06.16	63	1498	4	A15SMS	**T738B**	**T699B**		boot design
Sens									
1.3i	01.01 -	49	1299	4	MeMZ-307	**T393B**			
1.4 i 8V	01.07 -	56	1386	4	MeMZ-317	**T393B**			
Sens Hatchback									
1.3 i 8V	01.12 -	49	1299	4	MeMZ-307	**T393B**			
1.4 i 8V	01.12 -	56	1386	4	MeMZ-317	**T393B**			
Slavuta (1103)									
1.1	03.99 - 01.01	38	1091	4	MeMZ-245	**T367S**	**T137H**	**T860M**	premium / basic / inductive
1.2	01.00 - 07.06	43	1197	4	MeMZ-2457	**T367S**	**T137H**	**T860M**	premium / basic / inductive
1.2i	01.06 - 01.11	46	1197	4	MeMZ-2477	**T395S**	**T684H**	**T514M**	premium / basic / inductive
1.3	01.01 - 07.06	46	1299	4	MeMZ-301	**T367S**	**T137H**	**T860M**	premium / basic / inductive
1.3i	07.06 - 01.11	49	1299	4	MeMZ-307	**T395S**	**T684H**	**T514M**	premium / basic / inductive
Tavria (1102, 110216, 110217)									
1.1	01.87 - 09.08	38	1091	4	MeMZ-245	**T367S**	**T137H**	**T860M**	premium / basic / inductive
1.1	01.87 - 09.08	35	1091	4	MeMZ-2451	**T367S**	**T137H**	**T860M**	premium / basic / inductive
1.2	01.91 - 09.08	43	1197	4	MeMZ-2457	**T367S**	**T137H**	**T860M**	premium / basic / inductive
1.2i	01.98 - 09.08	46	1197	4	MeMZ-2477	**T395S**	**T684H**	**T514M**	premium / basic / inductive
Vida Hatchback									
1.4i 16V	01.12 - 12.16	69	1399	4	F14D3	**T923B**			
1.5i 8V	01.12 -	62	1498	4	F15S3	**T738B**			
1.5i 16V	04.13 -	80	1497	4	SQR477F	**T360B**			
Vida Sedan									
1.4i 16V	01.12 - 12.16	69	1399	4	F14D3	**T923B**			
1.5i 8V	01.12 -	62	1498	4	F15S3	**T738B**			
1.5i 16V	04.13 -	80	1497	4	SQR477F	**T360B**			
Vida Cargo									
1.5i 8V	11.16 -	62	1498	4	F15S3	**T738B**			

Ignition lead sets - summary
Комплекты проводов зажигания - перечень
Sady zapalovacích kabelů - přehled

Summary of „alternative“ and „original“ sets
Перечень комплектов „alternative“ и „original“
Přehled sad „alternative“ a „original“

alternative	original	supplement
T001B	T932C	
T002B	T818C	
T003B	T887C	
T004B	T874C	
T005B	T391C	
T006B	T842C	
T007B	T806C	
T008B	T807C	
T009B	T805C	
T010B	T982C	
T011B	T881C	
T012B	T880C	
T013B	T552C	
T014B	T876C	
T015B	T877C	
T016B	T601C	
T017B	T714C	
T019B	T922C	
T020B	T941C	
T021B	T389C	
T022B	T622C	
T023B	T717C	
T024B	T390C	
T025B	T812C	
T026B	T824C	
T027B	T173C	T715C
T027B	T715C	
T028B	T176C	T907C
T028B	T907C	
T029B	T940C	
T030B	T716C	
T031B	T174C	T718C
T031B	T718C	
T032B	T781C	
T033B	T175C	T886C
T033B	T886C	
T034B	T593C	
T035B	T650C	T731B
T036B	T651C	
T037B	T662C	
T038B	T701C	T207B
T039B	T702C	T428B
T040B	T821C	
T041B	T633C	
T042B	T642C	
T043B	T646C	
T044B	T649C	T730B
T045B	T654C	
T046B	T206C	
T047B	T656C	
T048B	T658C	
T050B	T700C	T429B
T051B	T703C	
T053B	T819C	
T054B	T820C	

alternative	original	supplement
T055B	T865C	
T056B	T406C	
T057B	T920C	
T058B	T971C	
T059B	T674C	
T060B	T801C	
T061B	T803C	
T062B	T823C	
T063B	T918C	
T064B	T800C	
T065B	T802C	
T066B	T843C	
T067B	T942C	
T068B	T952C	
T069B	T740C	T619B
T070B	T741C	T620B
T071B	T808C	
T072B	T809C	
T073B	T869C	
T074B	T578C	
T075B	T811C	
T076B	T854C	
T077B	T855C	
T078B	T856C	
T079B	T857C	
T080B	T810C	
T081B	T153C	
T083B	T101C	
T084B	T104C	
T086B	T657C	T734B
T087B	T931C	
T088B	T594C	
T089B	T103C	
T091B	T177C	
T092B	T170C	
T093B	T292C	
T094B	T675C	
T095B	T102C	
T096B	T289C	
T097B	T739C	
T098B	T387C	
T719B	T719C	
T720B	T720C	
T897B	T757C	
T944B	T590C	
T945B	T591C	
T954B	T592C	
T979B	T589C	
T986B	T777C	
T987B	T778C	
T988B	T780C	
T989B	T779C	
T991B	T928C	
T992B	T950C	
T993B	T951C	

original alternative supplement
- sets with the same models
- различные комплекты к данной модели
- sady se stejnými modely

supplement:
- supplement to sets „original“ and „alternative“
- дополняющий комплект
- funkční náhrada sad „original“ a „alternative“

Ignition lead sets - summary
Комплекты проводов зажигания - перечень
Sady zapalovacích kabelů - přehled

Summary of „original“ and „alternative“ sets
Перечень комплектов „original“ и „alternative“
Přehled sad „original“ a „alternative“

original	alternative	supplement
T101C	T083B	
T102C	T095B	
T103C	T089B	
T104C	T084B	
T153C	T081B	
T170C	T092B	
T173C	T027B	T715C
T174C	T031B	T718C
T175C	T033B	T886C
T176C	T028B	T907C
T177C	T091B	
T206C	T046B	
T289C	T096B	
T292C	T093B	
T387C	T098B	
T389C	T021B	
T390C	T024B	
T391C	T005B	
T406C	T056B	
T552C	T013B	
T578C	T074B	
T589C	T979B	
T590C	T944B	
T591C	T945B	
T592C	T954B	
T593C	T034B	
T594C	T088B	
T601C	T016B	
T622C	T022B	
T633C	T041B	
T642C	T042B	
T646C	T043B	
T649C	T044B	T730B
T650C	T035B	T731B
T651C	T036B	
T654C	T045B	
T656C	T047B	
T657C	T086B	T734B
T658C	T048B	
T662C	T037B	
T674C	T059B	
T675C	T094B	
T700C	T050B	T429B
T701C	T038B	T207B
T702C	T039B	T428B
T703C	T051B	
T714C	T017B	
T715C	T027B	
T716C	T030B	
T717C	T023B	
T718C	T031B	
T719C	T719B	
T720C	T720B	
T739C	T097B	
T740C	T069B	T619B

original	alternative	supplement
T741C	T070B	T620B
T757C	T897B	
T777C	T986B	
T778C	T987B	
T779C	T989B	
T780C	T988B	
T781C	T032B	
T800C	T064B	
T801C	T060B	
T802C	T065B	
T803C	T061B	
T805C	T009B	
T806C	T007B	
T807C	T008B	
T808C	T071B	
T809C	T072B	
T810C	T080B	
T811C	T075B	
T812C	T025B	
T818C	T002B	
T819C	T053B	
T820C	T054B	
T821C	T040B	
T823C	T062B	
T824C	T026B	
T842C	T006B	
T843C	T066B	
T854C	T076B	
T855C	T077B	
T856C	T078B	
T857C	T079B	
T865C	T055B	
T869C	T073B	
T874C	T004B	
T876C	T014B	
T877C	T015B	
T880C	T012B	
T881C	T011B	
T886C	T033B	
T887C	T003B	
T907C	T028B	
T918C	T063B	
T920C	T057B	
T922C	T019B	
T928C	T991B	
T931C	T087B	
T932C	T001B	
T940C	T029B	
T941C	T020B	
T942C	T067B	
T950C	T992B	
T951C	T993B	
T952C	T068B	
T971C	T058B	
T982C	T010B	

original alternative supplement
- sets with the same models
- различные комплекты к данной модели
- sady se stejnými modely

supplement:
- supplement to sets „original“ and „alternative“
- дополняющий комплект
- funkční náhrada sad „original“ a „alternative“

Combined ignition system - summary
Комбинированная система зажигания - перечень
Kombinovaný zapalovací systém – přehled

T565B + CL711

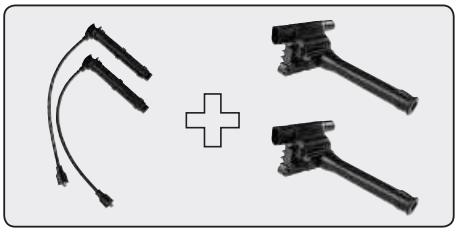

– sets and coils are delivered as different articles
– комплектов проводов зажигания и катушек зажигания надо заказывать отдельно
– sady a cívky se objednávají jako samostatné položky

semidirect set комплект проводов зажигания sada zapalovacích kabelů	ignition coils катушки зажигания zapalovací cívky	
T100C	CL307	
T108B	CL548	
T186B	CL553	
T238P	CL552	
T247P	CL594	
T248P	CL572	
T295P	CL582	
T365C	-	
T382B	CL707	
T471G	CL404	
T508B	CL505 +)	CL589 +)
T533P	CL547	
T537P	-	
T539P	CL931	
T565B	CL708 +)	CL711 +)
T587P	CL580	
T594C	CL028	
T088B	CL028	
T599C	CL305 +)	CL306 +)
T623C	CL604 +)	CL606 +)
T624C	CL604 +)	CL606 +)
T743C	CL606	
T745B	CL515	
T967B	CL533 +)	CL561 +)
T973P	-	
T978P	-	
T982C	CL604 +)	CL606 +)
T010B	CL604 +)	CL606 +)
T994B	CL561	

+) application in catalogue „Ignition coils“
+) применение в каталоге „Катушки зажигания“
+) použití cívek dle katalogu „Zapalovací cívky“

New sets - summary
Новые комплекты - перечень
Nové sady - přehled

TESLA		OEM
T022B	Mercedes	021905409AB
T024B	Mercedes	
T046B	Alfa Romeo	60538002
T095B	VW	071905409F
T155	Wartburg	
T156	Trabant	
T186B	Hyundai	27501-39A70
	Kia	27501-39A70
T528M	Lada	Renault 7700273826
T655B	Subaru	22451AA692
		22451AA830
T733H	UAZ	4091.3707244
T752B	Rover	GHT 272
T772B	Mazda	N3H1-18-140A
T793P	Toyota	90919-21541
T804S	UAZ	4091.3707244
T904M	UAZ	4091.3707244
T910H	Dacia	8200506297
	Lada	Renault 7700273826
	Renault	7700273826
T944B	Audi	VW N10238301
T945B	Audi	VW 053905481C
T954B	Audi	VW 053905431
T969B	Proton	Mitsubishi MD332343
T973P	Toyota	90919-15317
		90919-15456
		90919-15457
T978P	Toyota	19037-20020
		19037-20011
T979B	Audi	VW 077905441B
T994B	Fiat	71742423
	Suzuki	33740-86G00
		33730-86G00
		33705-86G00-000
		33705-80G00-000

T001B
Catalogue number of set
Заказной номер комплекта проводов зажигания
Objednací číslo sady zapalovacích kabelů

Kxxx
Type of lead for distributor/coil - spark plug, distributor - coil (length in cm)

Тип провода распределитель/катушка - свеча зажигания, распределитель - катушка (длина в cm)

Typ kabelu rozdělovač/cívka - zapalovací svíčka, rozdělovač-cívka (s délkou v cm)

T001B K288 95 95 100 100 110 110 110 110 K337 100 original T932C

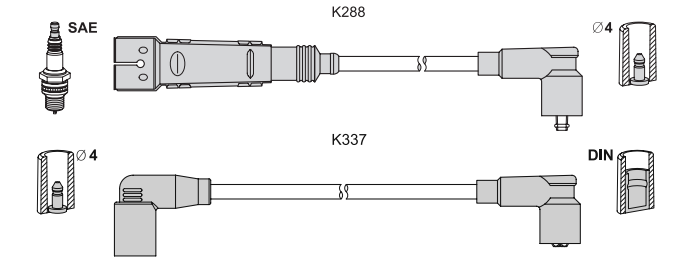

Mercedes 380 SE,SEL (W126) 3.8	12.79 - 08.85	150	M 116.963
3.8	12.85 - 12.86	160	M 116.961

Car models / Модели автомобилей / Modely automobilů
Year of production / Год производства / Rok výroby
Engine power / Мощность двигателя / Výkon motoru
Type of engine / Тип двигателя / Typ motoru

T101C K087 72 86 66 71 57 – alternative T083B

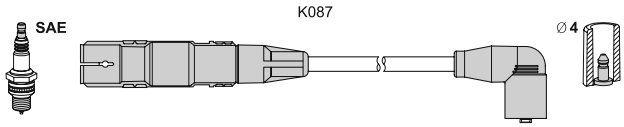

VW Passat (3B2) 2.3 VR5	10.96 - 08.97	110	AGZ

alternative TxxxB

set with copper core /T101C/
which could be replaced with a set with resistive core **/T083B/**

комплект с медным сердечником /T101C/
можно заменить комплектом с резистивным сердечником **/T083B/**

uvedená sada s měděným jádrem /T101C/
může být nahrazena sadou s odporovým jádrem **/T083B/**

original TxxxC

set with resistive core /T001B/
which stands as an alternative to sets with copper core **/T932C/**

комплект с резистивным сердечником /T001B/
равноценный комплекту с медным сердечником **/T932C/**

uvedená sada s odporovým jádrem /T001B/
je ekvivalentní k sadě s měděným jádrem **/T932C/**

T539P K227 40 25 + + –

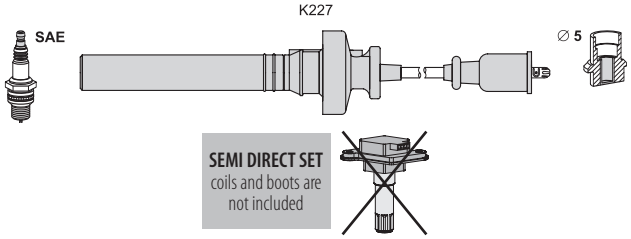

Mitsubishi Carisma Sedan 1.3	09.00 - 10.04	55	4G 13 (12V)

Combined ignition system set is supplied with no ignition coils or coil on plug boots.

Комбинированная система зажигания, в комплект не входят прямые катушки зажигания и их наконечники, поставляются отдельно.

Kombinovaný zapalovací systém, sada neobsahuje zapalovací cívky a jejich koncovky.

T720C K143 26 29 44 52 67 K143.1 72 (sensor) K100 80

sensor

sets with rpm sensor
комплекты с датчиком числа оборотов
sady s čidlem počtu otáček

Ignition lead sets - summary with designs
Комплекты проводов зажигания - изображение и перечень
Sady zapalovacích kabelů - přehled a vyobrazení

Measuring of lead lengths
Измерение длин проводов зажигания
Měření délek zapalovacích kabelů

L_c cm

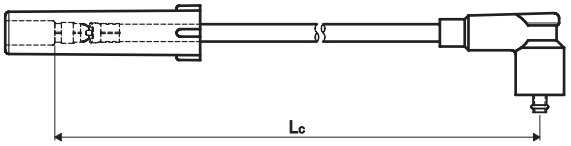

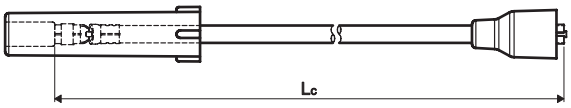

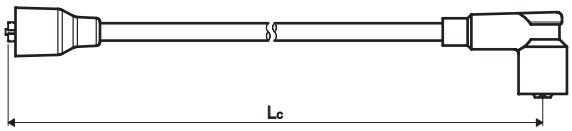

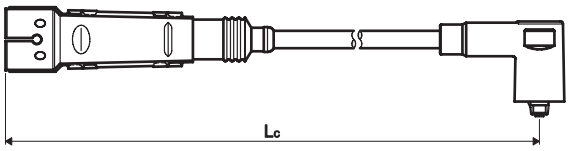

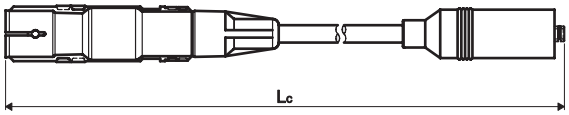

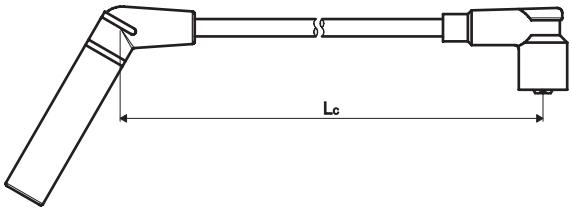

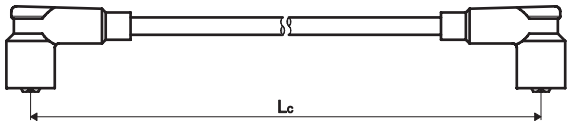

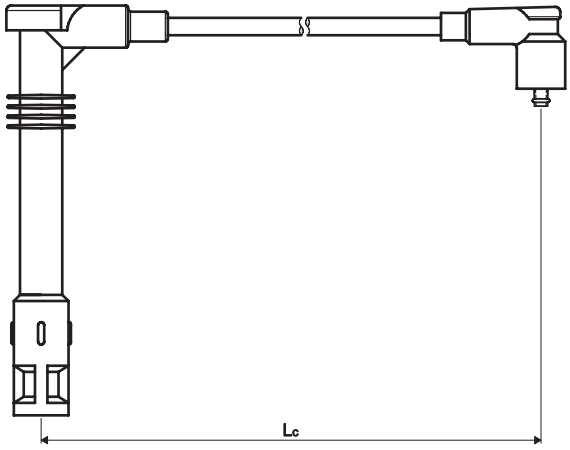

Type of leads connection
Способы присоединения проводов
Způsoby připojení kabelů

spark plug
свеча зажигания
zapalovací svíčka

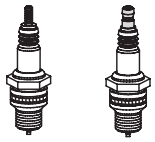

M4 **SAE ø6.3**

ignition coil
катушка зажигания
zapalovací cívka

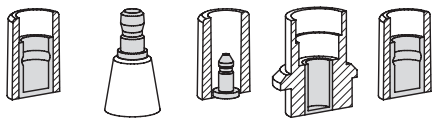

DIN ø8.2 **SAE ø6.3** **PIN ø4** **FORD** **DIN ø5**

distributor
распределитель
rozdělovač

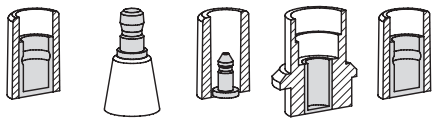

DIN ø8.2 **SAE ø6.3** **PIN ø4** **FORD** **DIN ø5**

Sets with the same models
Различные комплекты к данной модели
Sady se stejnými modely

AZLK, GAZ, LADA (VAZ), LuAZ, UAZ, ZAZ		
T106S	T891H	T679M
T343S	T341H	T345M
T355S	T134H	T412M
T356S	T135H	T413M
T357S	T136H	T414M
T358S	T342H	T415M
T359S	T340H	T416M
T367S	T137H	T860M
T394S		T513M
T395S	T684H	T514M
T417S	T354H	T347M
T418S	T419H	T420M
T627S	T403H	T704M
T635S	T634H	
T673S	T672H	
T677S	T676H	T678M
T712S	T696H	T713M
T774S	T859H	T516M
T804S	T733H	T904M
T867S	T771H	T517M
T930B	T910H	T528M

Dacia		
T930B	T910H	

Daewoo (Chevrolet)		
T736B	T440B	
T737B	T698B	
T738B	T699B	

Skoda		
T194S	T194H	
T368S	T122H	
T369S	T409H	
T371S	T145H	
T372S	T195H	
T641S	T185H	

T001B K540 95 95 100 100 110 110 110 110 K337 100 **original T932C**

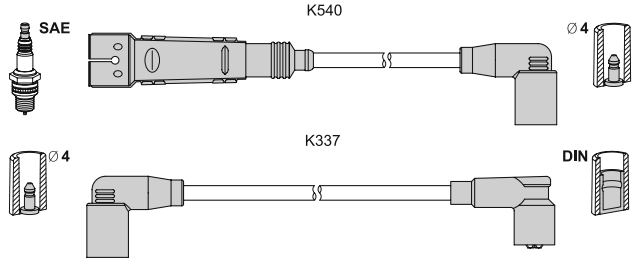

application → T932C (original)

T002B K270 75 65 60 55 - **original T818C**

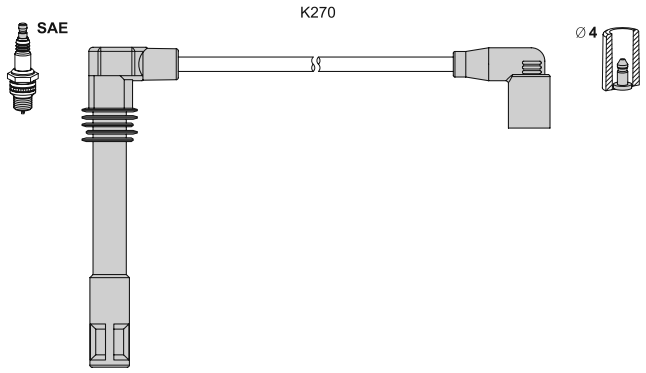

application → T818C (original)

T003B K270 45 45 50 45 50 50 - **original T887C**

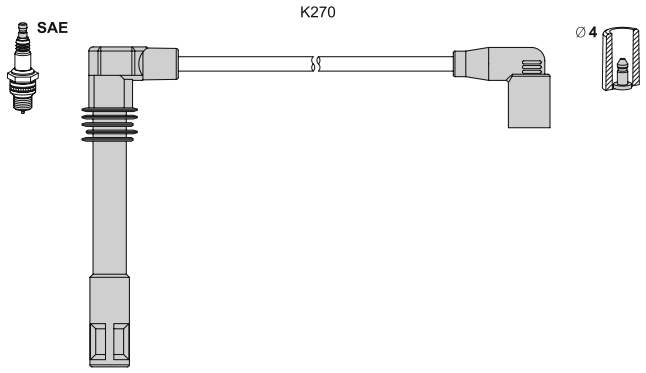

application → T887C (original)

T004B K271 50 45 35 30 - **original T874C**

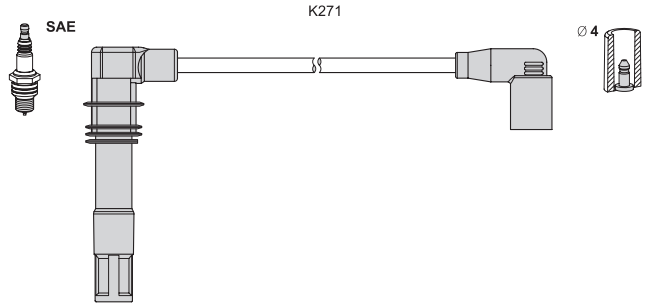

application → T874C (original)

T005B K273 45 45 65 65 K444 50 **original T391C**

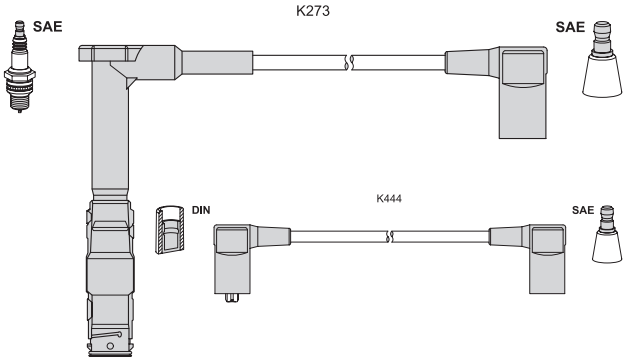

application → T391C (original)

T006B K272 53 45 37 33 K065 40 **original T842C**

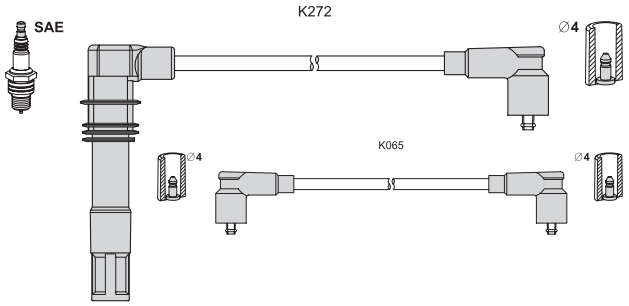

application → T842C (original)

T007B K273 35 45 55 60 70 75 K444 100 **original T806C**

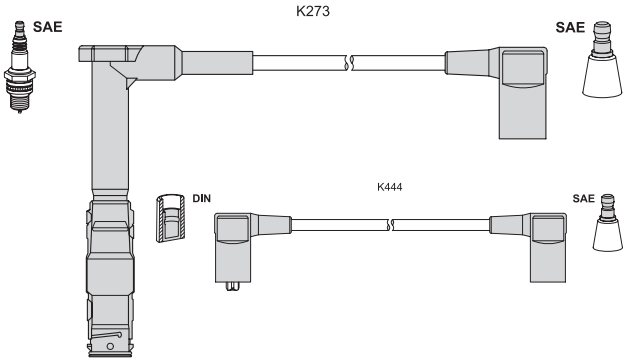

application → T806C (original)

T008B K273 100 90 100 90 100 80 100 105 K444 115/60 **original T807C**

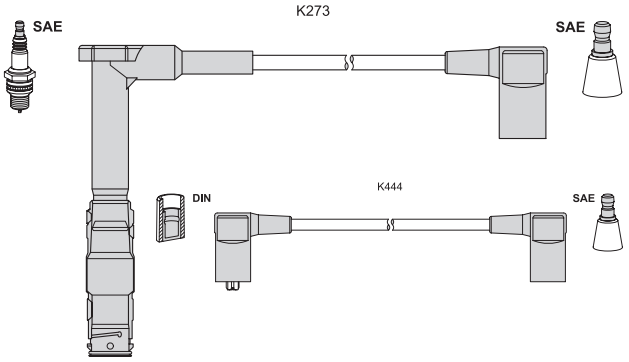

application → T807C (original)

T009B K274 50 45 45 50 - original T805C

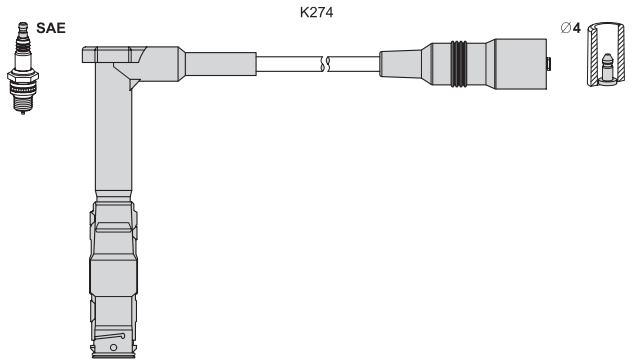

application → T805C (original)

T010B K274 33 33 + + - original T982C

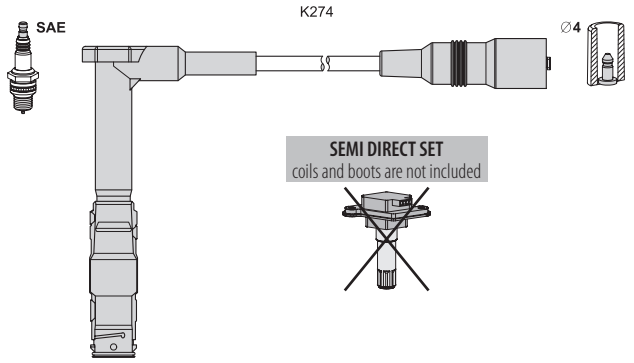

application → T982C (original)

T011B K275 60 50 40 30 K318 40 original T881C

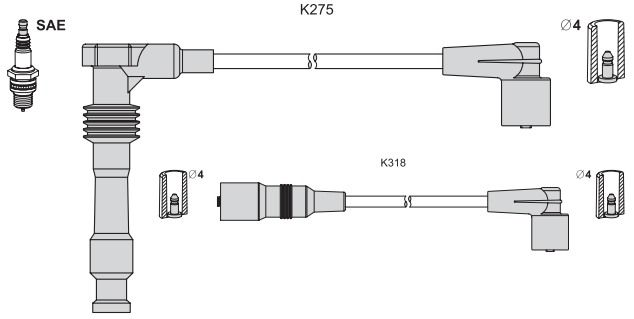

application → T881C (original)

T012B K276 55 40 30 25 K065 30 original T880C

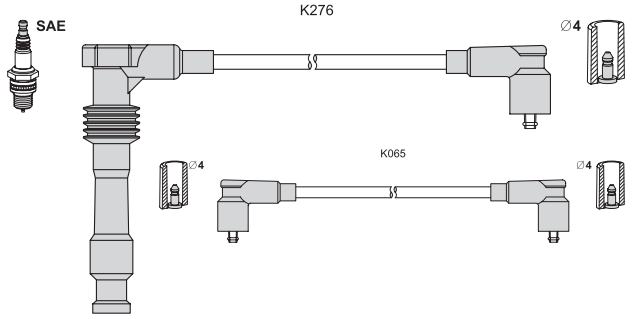

application → T880C (original)

T013B K277 29 43 58 67 - original T552C

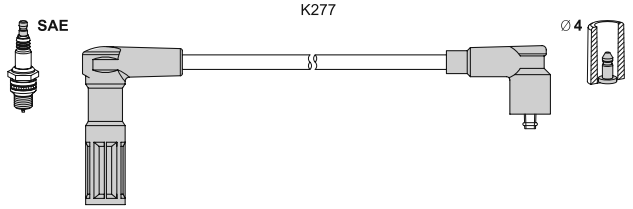

application → T552C (original)

T014B K278 50 55 60 80 - original T876C

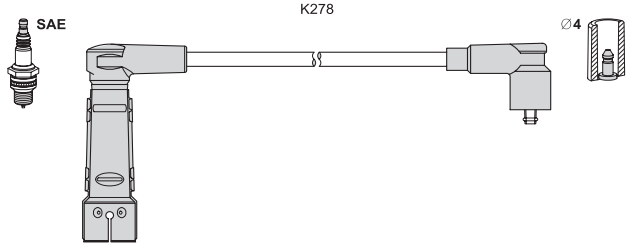

application → T876C (original)

T015B K279 70 70 55 45 K062 55 original T877C

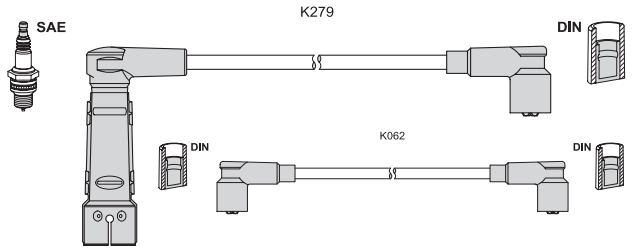

application → T877C (original)

T016B K280 85 80 65 60 K528 40 original T601C

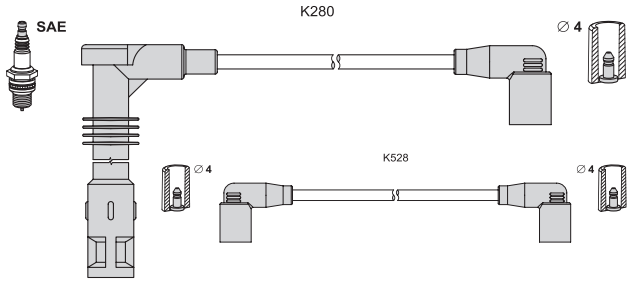

application → T601C (original)

T017B K280 60 65 75 80 K528 40 original T714C

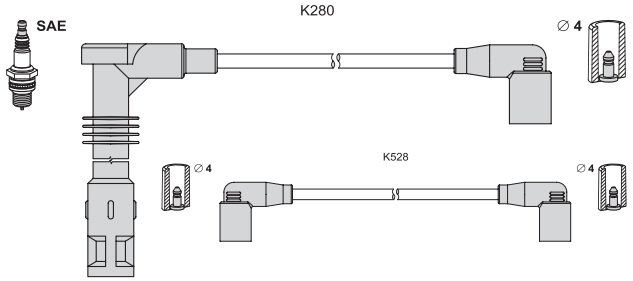

application → T714C (original)

T 019B ▶

T019B K280 85 85 85 85 K322 60 **original T922C**

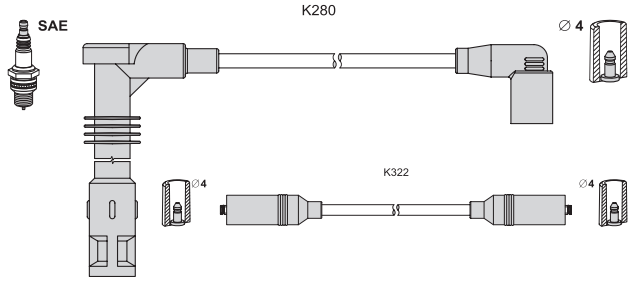

application → T922C (original)

T020B K280 45 50 65 80 80 K528 40 **original T941C**

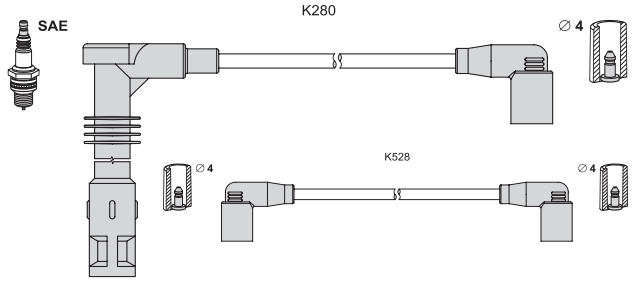

application → T941C (original)

T021B K283 47 51 61 65 65 70 70 75 - **original T389C**

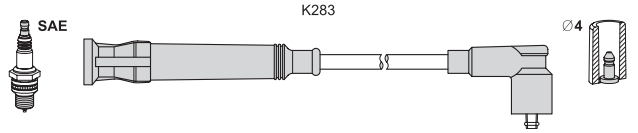

application → T389C (original)

T022B K298 49 67 86 92 105 107 - **original T622C**

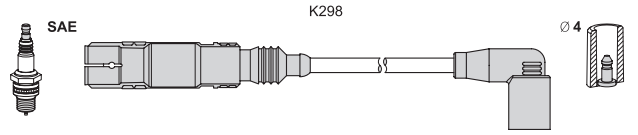

application → T622C (original)

T023B K283 85 95 105 110 125 130 K065 75 **original T717C**

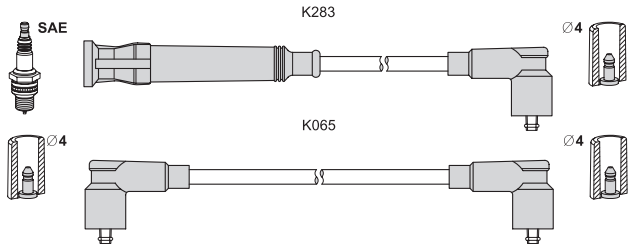

application → T717C (original)

T024B K599 49 53 55 66 71 74 74 83 89 91 96 110 K444 63 63 **original T390C**

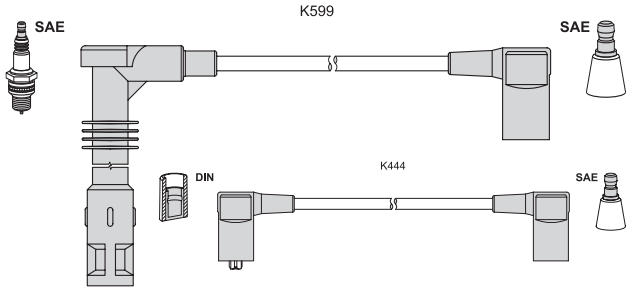

application → T390C (original)

T025B K283 85 75 75 70 - **original T812C**

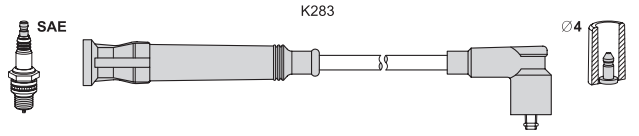

application → T812C (original)

T026B K283 65 70 75 75 45 55 55 65 - **original T824C**

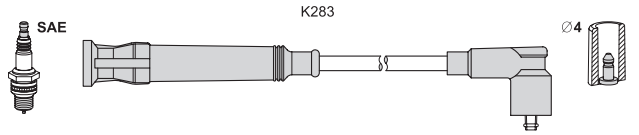

application → T824C (original)

T027B K284 45 55 60 75 85 K284.1 90 (sensor) K300 80 **original T173C /T715C/**

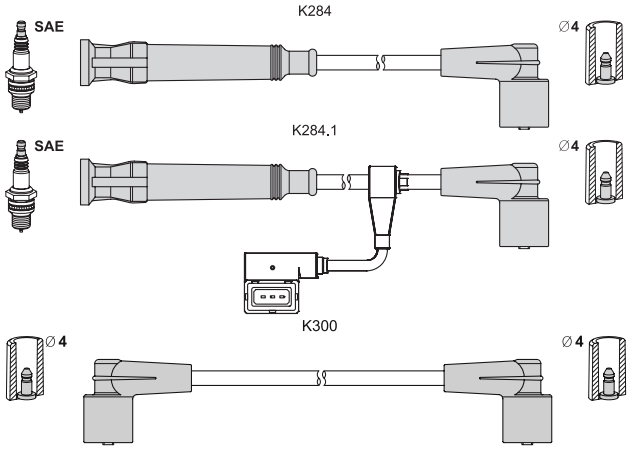

application → T173C (original)

T028B K284 35 45 55 K284.1 65 (sensor) K300 75 original T176C /T907C/

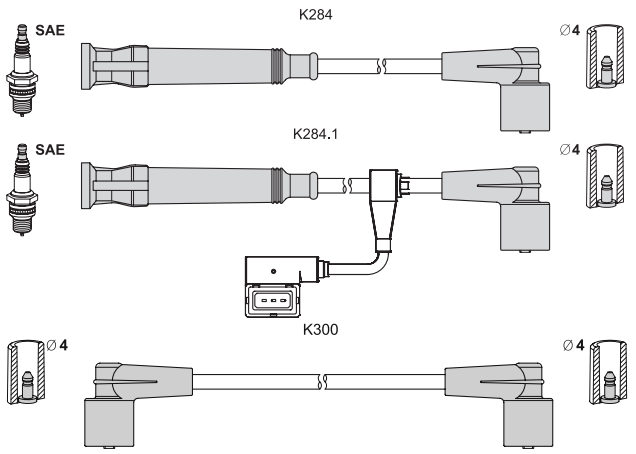

application → T176C (original)

T029B K284 45 50 60 75 80 90 - original T940C

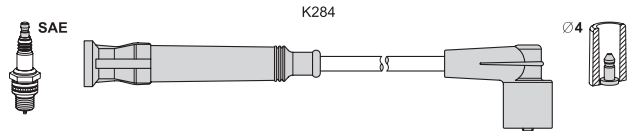

application → T940C (original)

T030B K285 95 90 80 65 55 50 K321 40 original T716C

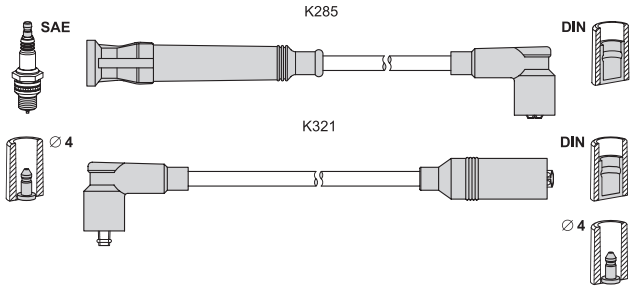

application → T716C (original)

T031B K286 50 55 60 75 85 K286.1 90 (sensor) K318 75 original T174C /T718C/

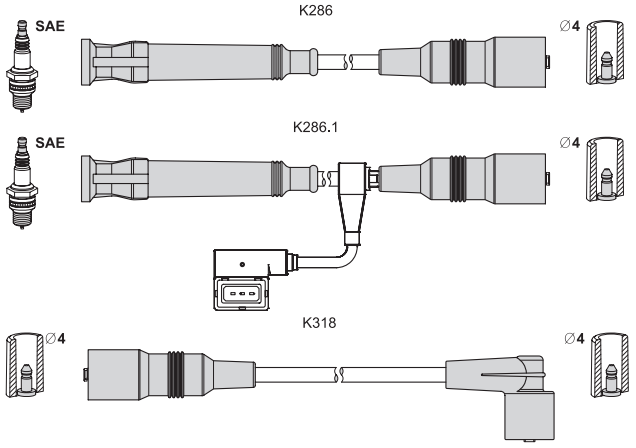

application → T174C (original)

T032B K440 30 35 35 40 - original T781C

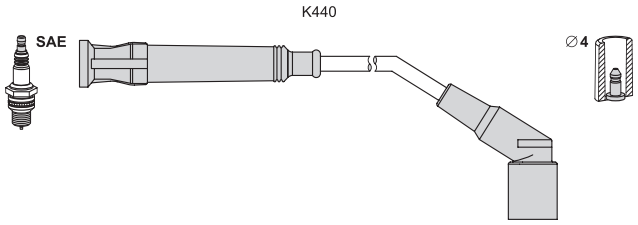

application → T781C (original)

T033B K286 50 55 60 75 85 K286.1 90 (sensor) K318 90 original T175C /T886C/

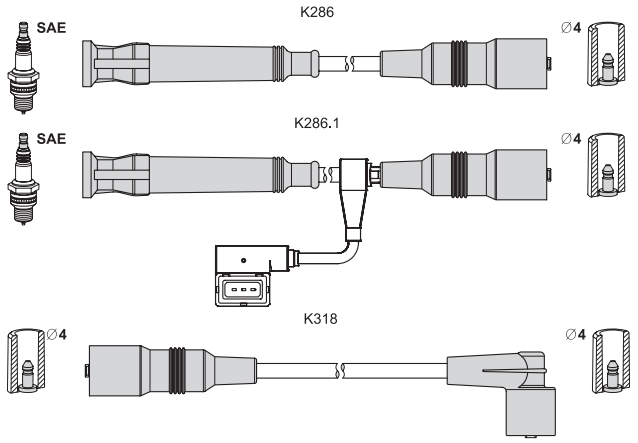

application → T175C (original)

T034B K287 60 60 60 60 K301 70 original T593C

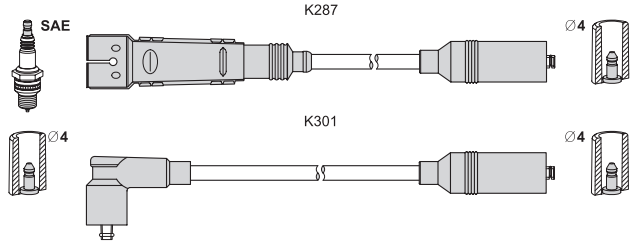

application → T593C (original)

T035B K287 30 40 50 60 K065 60 original T650C

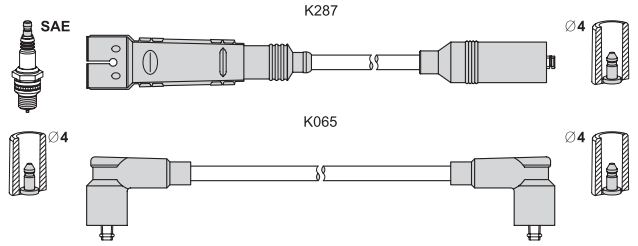

application → T650C (original)

T 036B ▶

T036B K287 60 50 40 35 K301 55 — **original T651C**

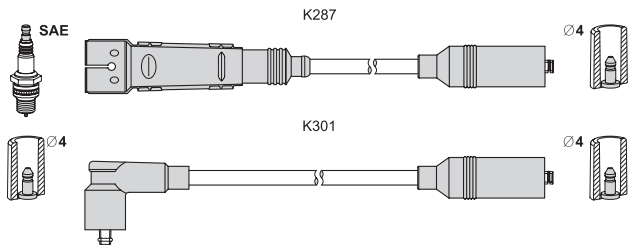

application → T651C (original)

T037B K288 70 70 60 40 40 40 K065 40 — **original T662C**

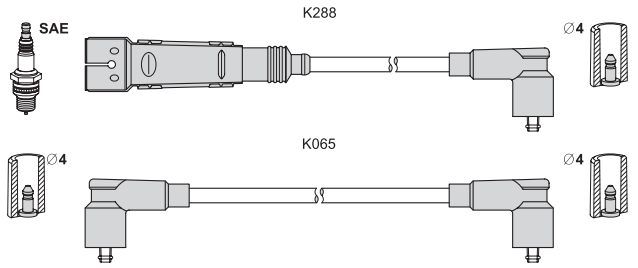

application → T662C (original)

T038B K287 40 50 50 60 K301 40 — **original T701C**

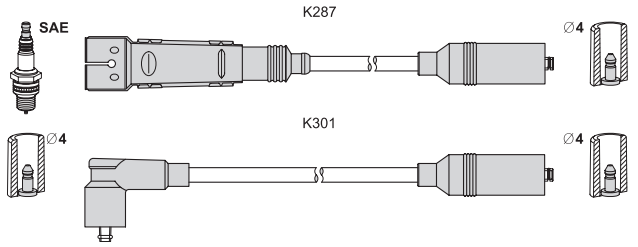

application → T701C (original)

T039B K287 60 60 60 60 K301 40 — **original T702C**

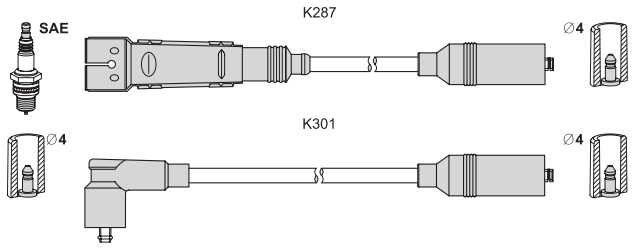

application → T702C (original)

T040B K287 60 50 40 35 K065 60 — **original T821C**

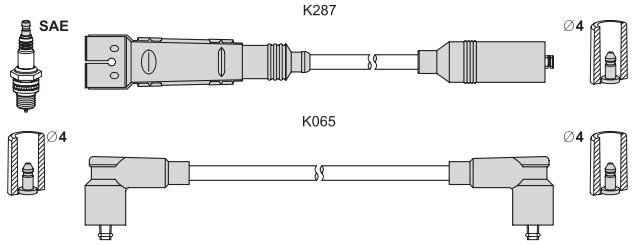

application → T821C (original)

T041B K288 65 55 50 35 K301 50 — **original T633C**

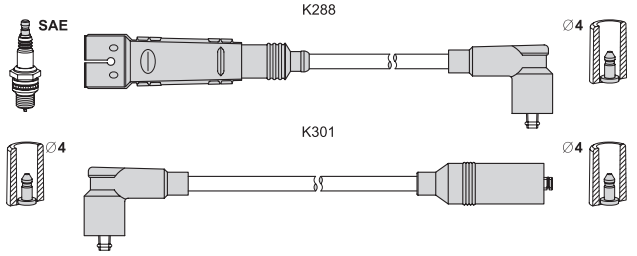

application → T633C (original)

T042B K288 40 55 55 70 K065 35 — **original T642C**

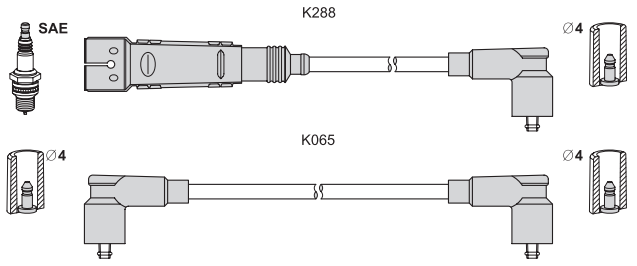

application → T642C (original)

T043B K288 50 60 60 70 K301 30 — **original T646C**

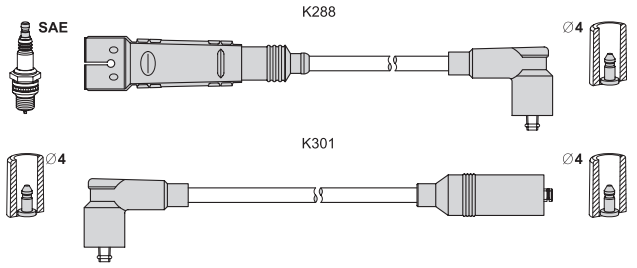

application → T646C (original)

T044B K288 50 50 60 70 K301 60 — **original T649C**

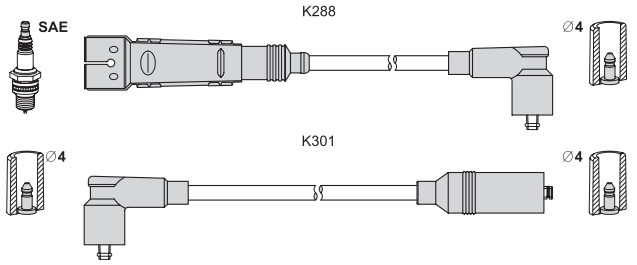

application → T649C (original)

T045B K288 40 50 60 70 K065 60 — **original T654C**

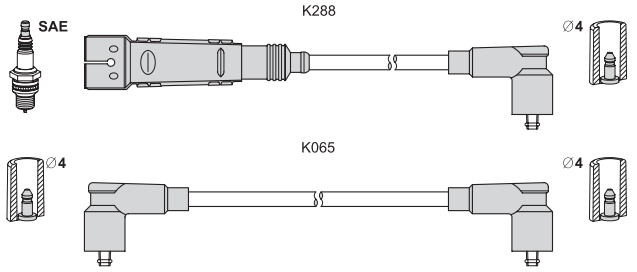

application → T654C (original)

T046B K285 62 78 88 93 K430 53 **original T206C**

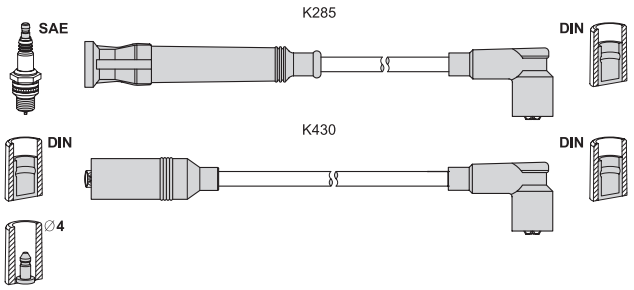

application → T206C (original)

T047B K288 60 60 60 60 K301 60 **original T656C**

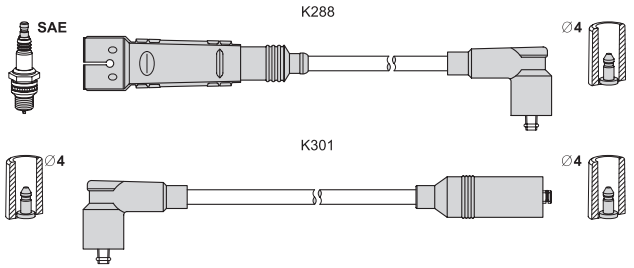

application → T656C (original)

T048B K288 70 60 55 40 K065 50 **original T658C**

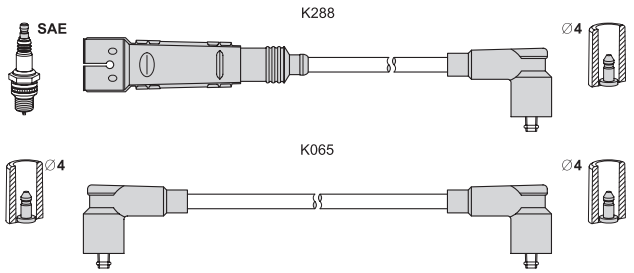

application → T658C (original)

T050B K288 80 80 70 60 50 K065 40 **original T700C**

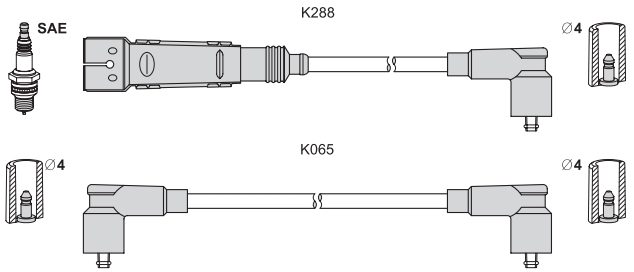

application → T700C (original)

T051B K288 60 80 80 80 K301 30 **original T703C**

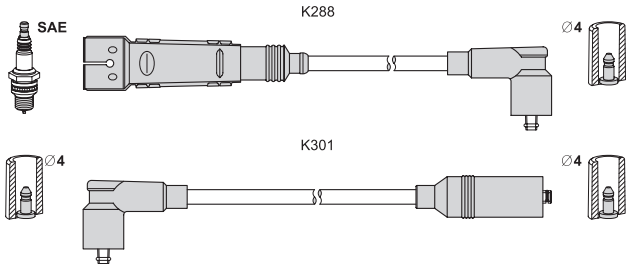

application → T703C (original)

T053B K288 70 55 50 40 K065 50 **original T819C**

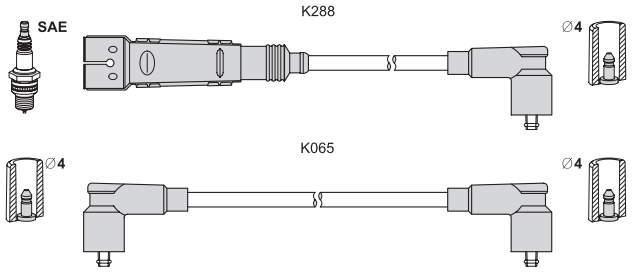

application → T819C (original)

T054B K288 50 50 80 80 K301 60 **original T820C**

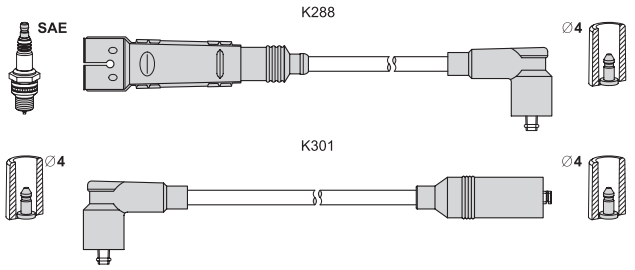

application → T820C (original)

T055B K288 35 50 55 70 K065 35 **original T865C**

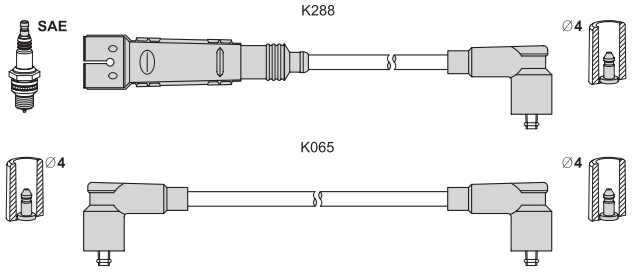

application → T865C (original)

T056B K298 61 63 58 46 - **original T406C**

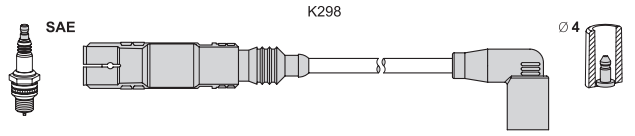

application → T406C (original)

T057B K288 85 85 85 55 55 K065 75 **original T920C**

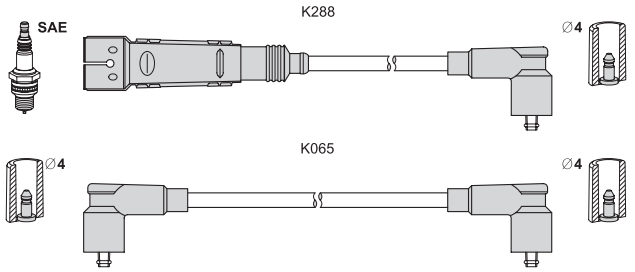

application → T920C (original)

T 058B ▶

T058B K290 80 85 85 85 85 90 100 100 K444 65 **original T971C**

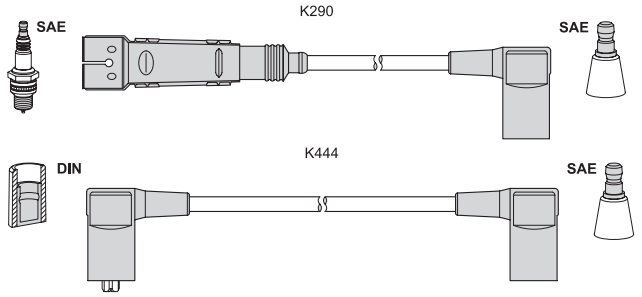

application → T971C (original)

T059B K291 60 65 45 30 - **original T674C**

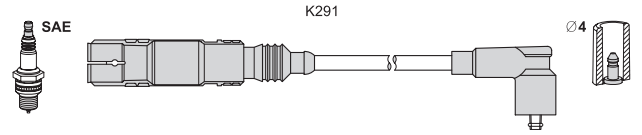

application → T674C (original)

T060B K291 100 90 85 75 70 60 K065 60 **original T801C**

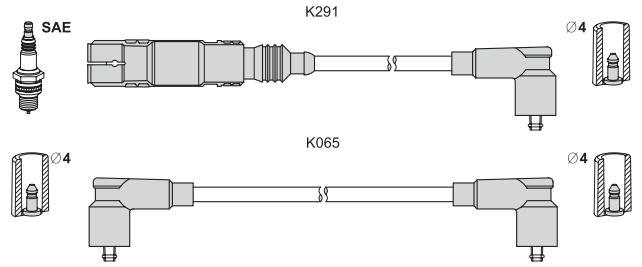

application → T801C (original)

T061B K291 100 85 100 70 95 55 - **original T803C**

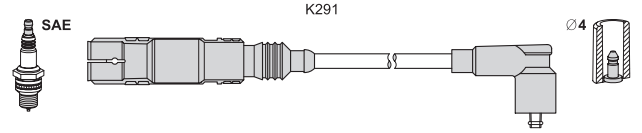

application → T803C (original)

T062B K291 100 85 85 70 70 55 - **original T823C**

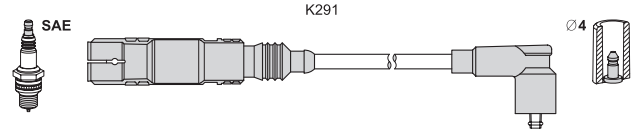

application → T823C (original)

T063B K291 100 85 85 70 70 55 K065 50 **original T918C**

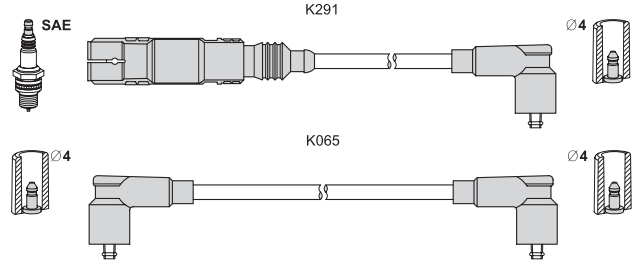

application → T918C (original)

T064B K292 65 55 40 30 K065 55 **original T800C**

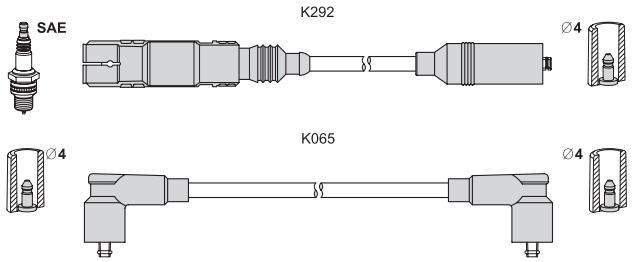

application → T800C (original)

T065B K292 65 55 40 30 K301 55 **original T802C**

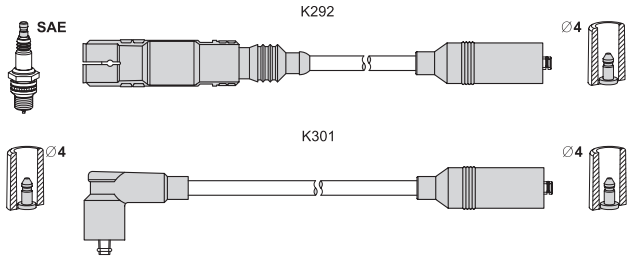

application → T802C (original)

T066B K292 40 50 65 75 K301 60 **original T843C**

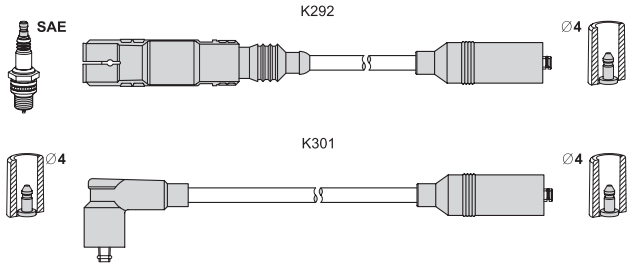

application→ T843C (original)

T067B K292 30 40 50 60 K322 65 **original T942C**

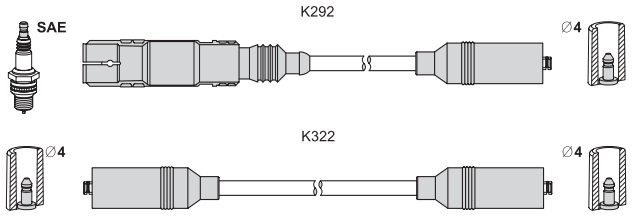

application → T942C (original)

T068B K292 70 50 40 30 K301 30 **original T952C**

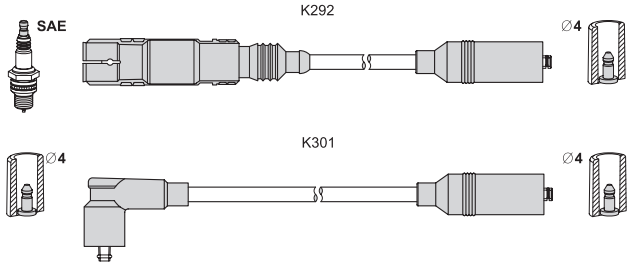

application → T952C (original)

T069B K294 70 85 85 100 K444 55 — **original T740C**

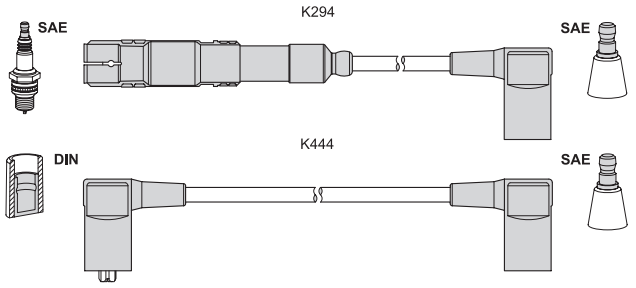

application → T740C (original)

T070B K294 40 50 65 65 80 95 K444 100 — **original T741C**

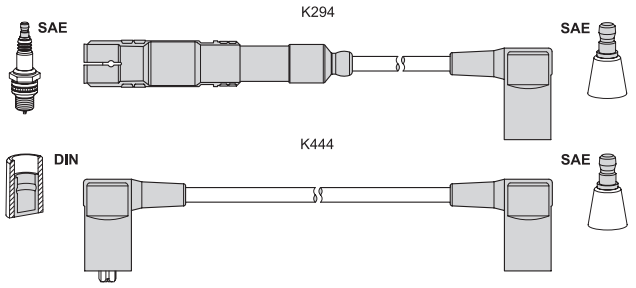

application → T741C (original)

T071B K446 30 25 25 30 25 25 25 25 30 25 25 30 - ** — **original T808C

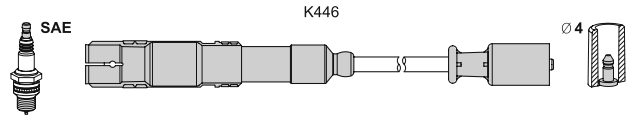

application → T808C (original)

T072B K446 35 30 30 30 30 30 25 25 25 25 25 25 25 25 25 30 - ** — **original T809C

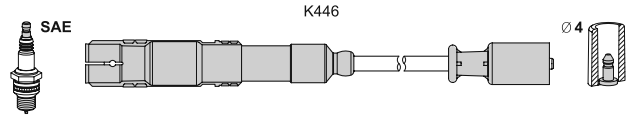

application → T809C (original)

T073B K296 35 55 60 35 45 65 - ** — **original T869C

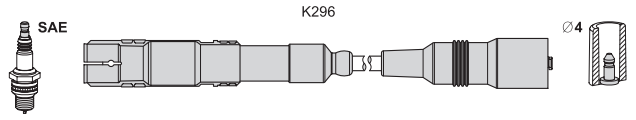

application → T869C (original)

T074B K298 85 70 63 60 - ** — **original T578C

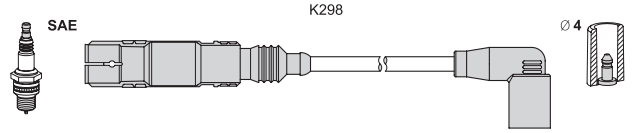

application → T578C (original)

T075B K566 35 35 40 45 - ** — **original T811C

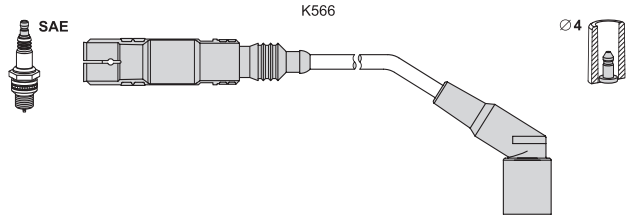

application → T811C (original)

T076B K298 70 65 50 30 - ** — **original T854C

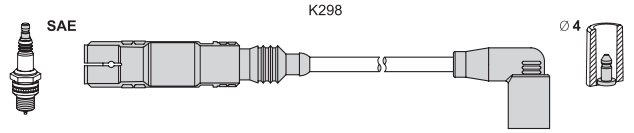

application → T854C (original)

T077B K298 65 60 45 25 - ** — **original T855C

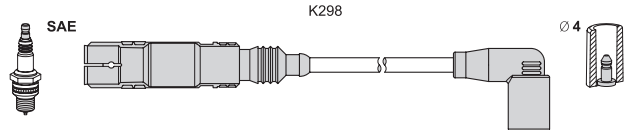

application → T855C (original)

T078B K298 80 65 45 30 - ** — **original T856C

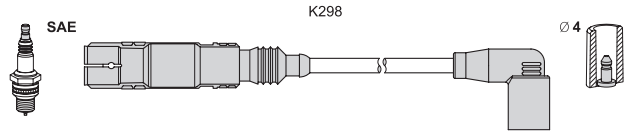

application → T856C (original)

T079B K298 85 70 65 60 - ** — **original T857C

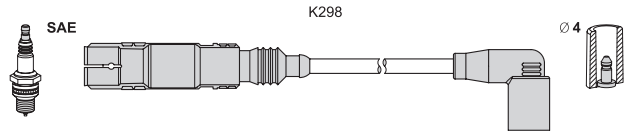

application → T857C (original)

T080B K566 35 40 40 45 - ** — **original T810C

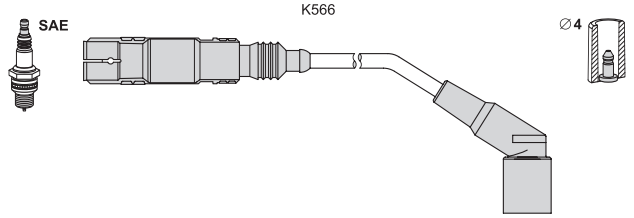

application → T810C (original)

T081B K298 80 77 66 66 59 - ** — **original T153C

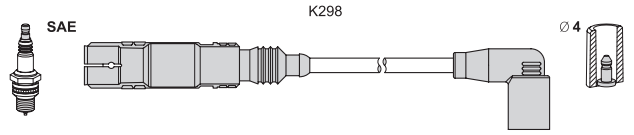

application → T153C (original)

T 083B ▶

T083B K291 72 86 66 71 57 - original T101C

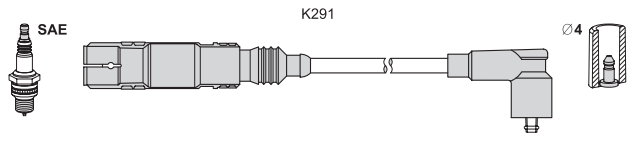

application → T101C (original)

T084B K320 70 70 70 70 K321 55 original T104C

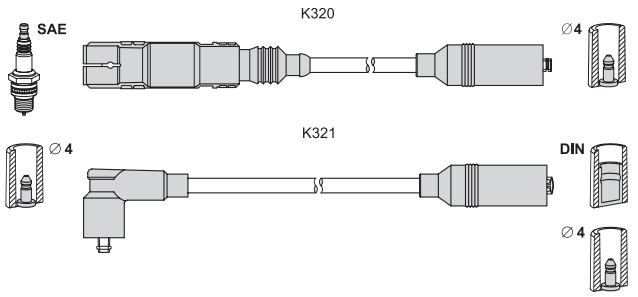

application → T104C (original)

T086B K288 60 60 60 60 K065 60 original T657C

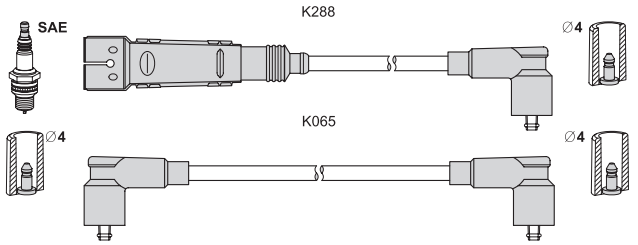

application → T657C (original)

T087B K540 80 80 80 85 85 90 90 90 K541 80 original T931C

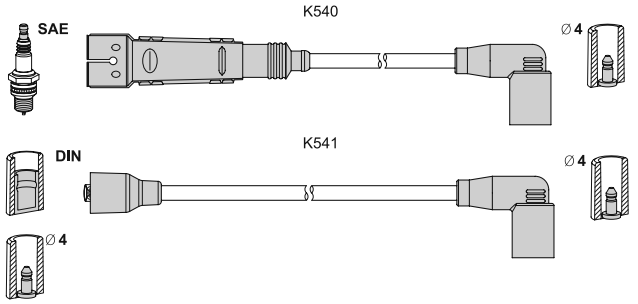

application → T931C (original)

T088B K323 30 30 + + - original T594C

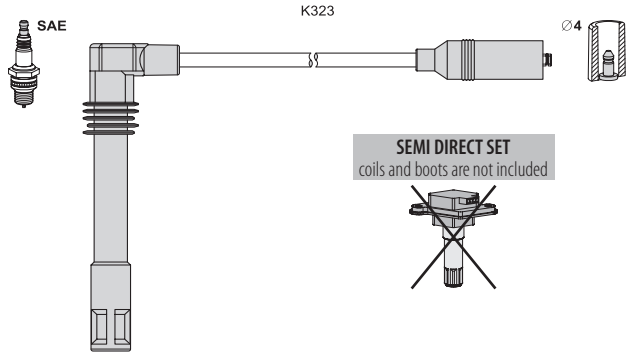

application → T594C (original)

T089B K280 80 80 65 65 K528 55 original T103C

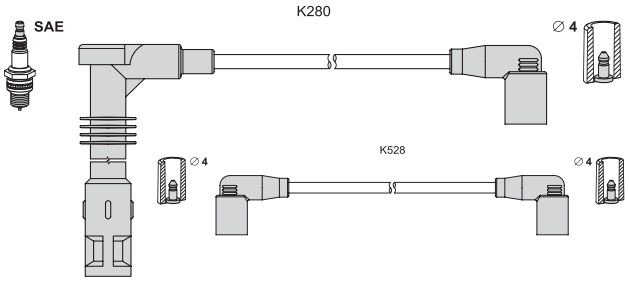

application → T103C (original)

T091B K277 23 27 30 43 - original T177C

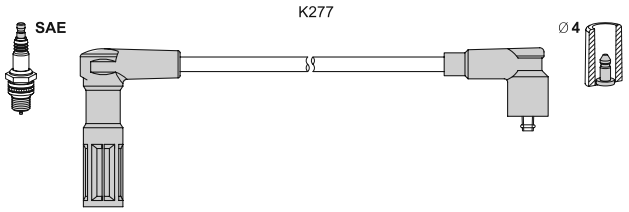

application → T177C (original)

T092B K353 24 24 24 K354 48 48 48 - original T170C

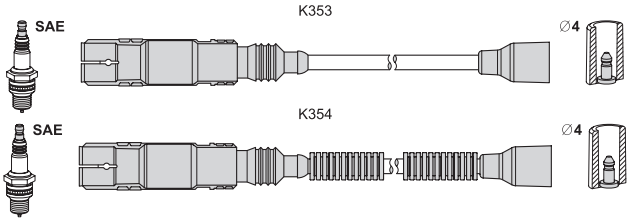

application → T170C (original)

T093B K363 35 50 60 70 75 90 K319 42 original T292C

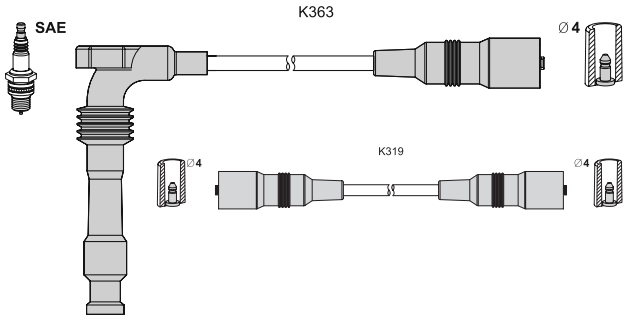

application → T292C (original)

T094B K288 85 75 75 55 55 K065 35 original T675C

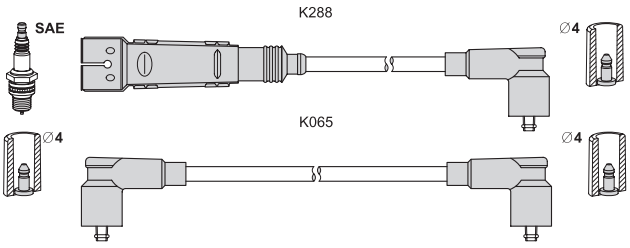

application → T675C (original)

T095B K298 55 63 63 74 77 - original T102C

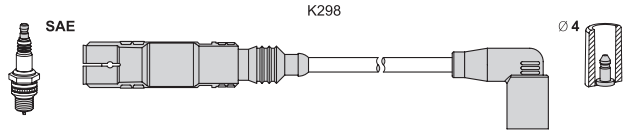

application → T102C (original)

T096B K275 60 58 50 37 - original T289C

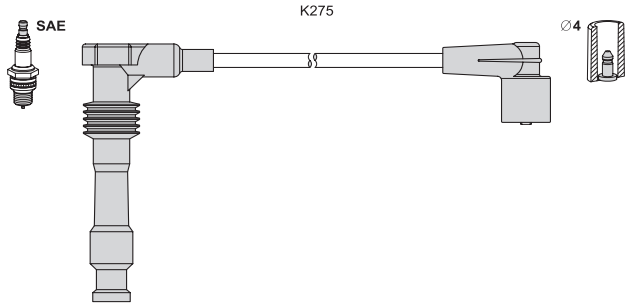

application → T289C (original)

T097B K446 43 44 45 37 - original T739C

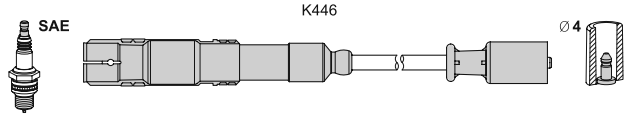

application → T739C (original)

T098B K298 75 63 50 43 - original T387C

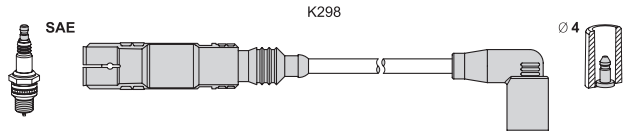

application → T387C (original)

T100C K263 12 12 12 12 + + + + -

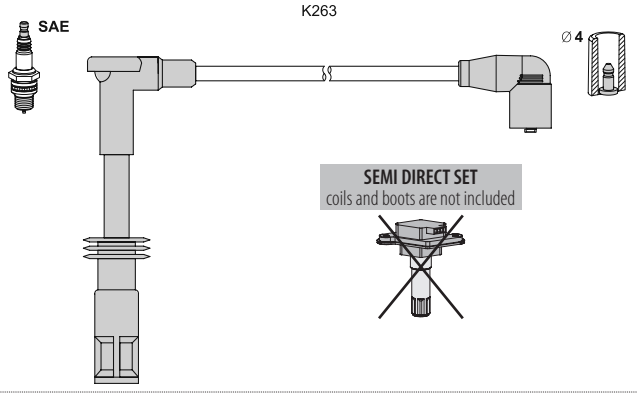

Alfa Romeo 147 1.6 16V T.S.	01.01 - 03.10	88	AR 32104
1.6 16V T.S. ECO	01.01 - 03.10	77	AR 37203
2.0 16V T.S.	01.01 - 03.10	110	AR 32310
156 (932) 1.6 16V T.S.	09.97 - 09.05	88	AR 32103/AR 32104
1.8 16V T.S.	10.00 - 09.05	103	AR 32205
2.0 16V T.S.	10.00 - 03.02	110	AR 32310
156 Sportwag. 1.6 16V T.S.	05.00 - 05.06	88	AR 32103/AR 32104
1.8 16V T.S.	10.00 - 05.06	103	AR 32205
2.0 16V T.S.	10.00 - 03.02	110	AR 32310
166 (936) 2.0 T.S.	10.00 - 06.07	110	AR 36301
GT 1.8 T.S.	11.03 - 09.10	103	AR 32205

< T100C

Alfa Romeo GTV (916C_) 2.0 16V T.S.	06.95 - 10.05	110	AR 32310
Spider (916S_) 2.0 16V T.S.	06.95 - 04.05	110	AR 32310

T101C K098 72 86 66 71 57 - alternative T083B

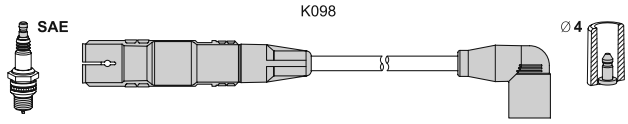

VW Passat (3B2) 2.3 VR5	10.96 - 08.97	110	AGZ
Passat Variant 2.3 VR5	06.97 - 08.97	110	AGZ
2.3 VR5 syncro/4mot.	10.97 - 11.00	110	AGZ

T102C K403 80 77 66 66 58 - alternative T095B

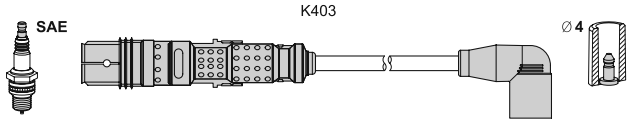

VW Bora (1J2) 2.3 V5 4motion	01.99 - 04.00	110	AGZ
Bora Combi (1J6) 2.3 V5	05.99 - 10.00	110	AGZ
2.3 V5 4motion	05.99 - 04.00	110	AGZ
Golf IV Variant (1J5) 2.3 V5	05.99 - 04.00	110	AGZ
2.3 V5 4motion	05.99 - 04.00	110	AGZ
Passat 2.3 VR5 syncro	09.97 - 04.98	110	AGZ
Passat Variant 2.3 VR5	09.97 - 04.98	110	AGZ

T103C K082 80 80 65 65 K090 55 alternative T089B

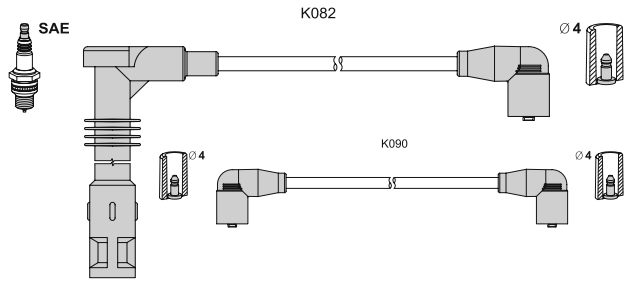

VW Corrado (53I) 1.8 16V	04.89 - 07.92	100	KR
2.0 i 16V	08.91 - 12.95	100	9A

T104C K265 70 70 70 70 K091 55 alternative T084B

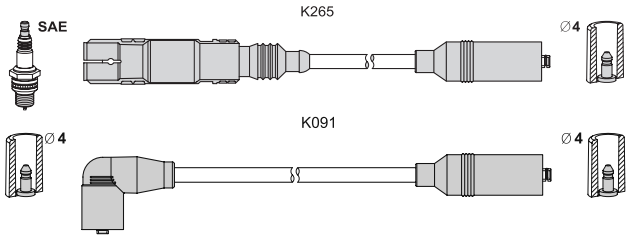

VW Golf III (1H1) 1.6	07.95 - 08.97	74	AEK
Golf III Cabriolet (1E7) 1.6	10.94 - 05.98	74	AEK
Passat (3A2, 35I) 1.6	10.94 - 08.96	74	AEK
Vento (1H2) 1.6	10.94 - 09.98	74	AEK

T 105B ▶

T105B K266 59 51 37 30 K060 30

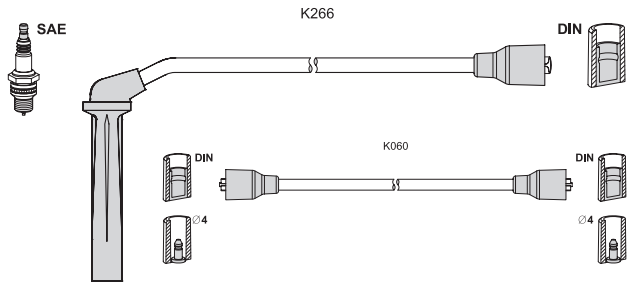

Saab 900 II 2.0 i	08.94 - 02.98	96	B204I
2.0 i	07.93 - 07.94	98	B206I
2.3 16V	07.93 - 02.98	110	B234I
900 II Cabriolet 2.0 i	12.93 - 02.98	96	B204I
2.3 16V	12.93 - 02.98	110	B234I
900 II Coupe 2.0 i	08.94 - 02.98	96	B204I
2.0 i	12.93 - 07.94	98	B206I
2.3 16V	12.93 - 02.98	110	B234I
9-3 (YS3D) 2.0 i	02.98 - 09.02	96	B204I
2.0 SE Turbo	02.98 - 09.02	147	B204R
2.0 Turbo	10.98 - 09.02	113	B204E
2.3 i	02.98 - 09.02	110	B234I
9-3 Cabriolet (YS3D) 2.0 i	02.98 - 08.03	96	B204I
2.0 SE Turbo	02.98 - 08.03	147	B204R
2.0 Turbo	10.98 - 08.03	113	B204E
2.0 Turbo	02.98 - 08.03	136	B205L/B204L
2.0 Turbo	10.99 - 08.03	151	B205R
2.3 i	02.98 - 08.03	110	B234I

T106S K358 22 22 25 25 -

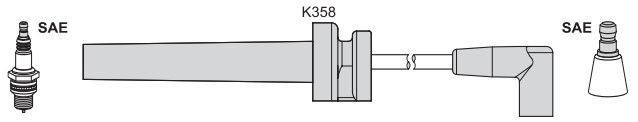

GAZ 31105 Volga 2.4 16V	06.07 -	105	Chrysler DOHC
Volga Siber 2.4 16V	09.08 -	105	Chrysler DOHC

T107B K211 13 13 18 18 -

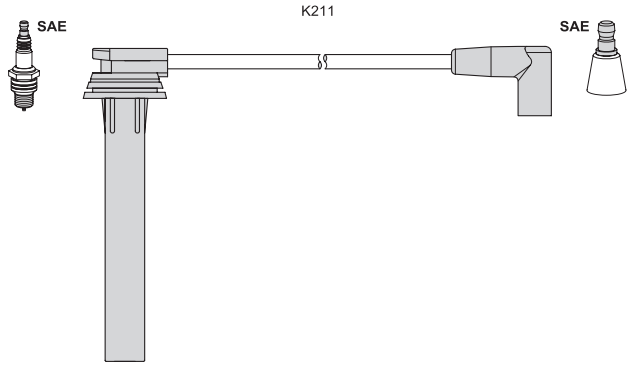

Chrysler Cirrus 2.0 LX	10.97 - 09.00	98	ECB
Neon (PL) 1.8 16V	09.97 - 08.99	85	EBD
2.0 16V	05.94 - 08.99	98	420H
Neon II 1.8	01.00 -	91	EBD
2.0 16V R/T	10.01 - 12.06	110	ECH
Sebring (JR) 2.0	04.01 - 06.07	104	ECC
Stratus (JA) 2.0 16V	12.95 -	98	ECB
2.0 LE	12.95 - 04.01	96	C00
Stratus Cabriolet 2.0 LE	06.96 - 04.01	96	420X
Voyager III (GS) 2.0 i	01.95 - 03.01	98	C00

T108B K559 28 K570 18 + + -

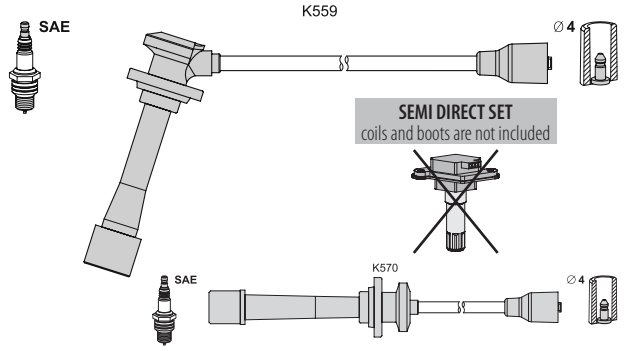

Kia Sportage (K00) 2.0	10.00 - 08.03	87	
2.0 4WD	10.00 - 08.03	87	
2.0i 16V	10.99 - 08.03	94	FE (16 V)
2.0i 16V 4WD	04.94 - 08.03	94	FE (16 V)

T109B K010 45 50 60 70 K075 60

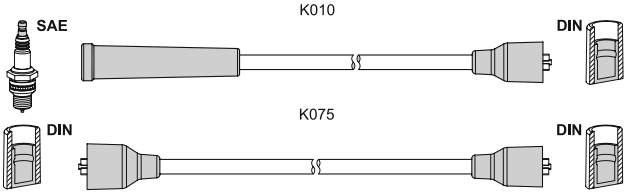

Seat Ibiza I (021A) 0.9	08.90 - 05.93	29	146 A 000/09 NCA
0.9	08.86 - 05.93	32	146 A 000

T110B K303 20 15 25 30 -

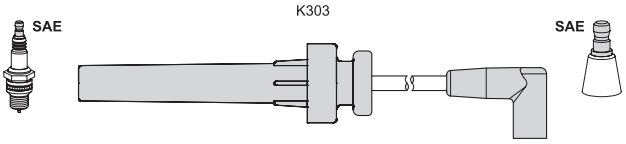

Chrysler Neon (PL) 1.8 16V	09.97 - 08.99	85	EBD
Sebring (JR) 2.0	04.01 - 06.07	104	ECC
Stratus (JA) 2.0 16V	12.95 -	98	ECB
2.0 LE	12.95 - 04.01	96	C00
Stratus Cabriolet 2.0 LE	06.96 - 04.01	96	420X
Voyager III (GS) 2.0 i	01.95 - 03.01	98	C00

T111B K303 30 30 25 25 -

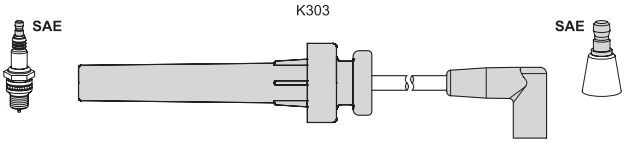

Chrysler Neon (PL) 2.0 16V	06.94 - 08.99	107	ECC
2.0 16V	04.96 - 08.99	109	420T
Stratus (JA) 2.4 16 V	12.95 - 04.01	103	EDZ
2.4 16V	12.95 -	112	EDZ
Voyager III (GS) 2.4 i	01.95 - 03.01	111	B00
2.4 AWD	02.97 - 03.01	111	EDZ

T112B K304 35 35 35 35 -

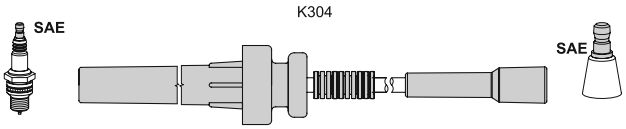

Chrysler PT Cruiser (PT_) 2.0	06.00 - 12.10	104	ECC

< T112B			
Chrysler PT Cruiser (PT_) 2.0	10.04 - 12.10	100	ECC
2.4	06.00 - 12.10	110	EDZ
2.4	08.05 - 12.10	105	EDZ
PT Cruiser Cabriolet 2.4	03.04 - 03.08	105	EDZ
Sebring (JR) 2.4	04.01 - 06.07	112	EDZ
Sebring Cabriolet (JR) 2.0	04.01 - 06.07	104	ECC
2.4	04.01 - 06.07	112	EDZ
Voyager IV (RG) 2.4	02.00 - 12.08	108	EDZ

T113B K305 33 43 53 63 K326 85

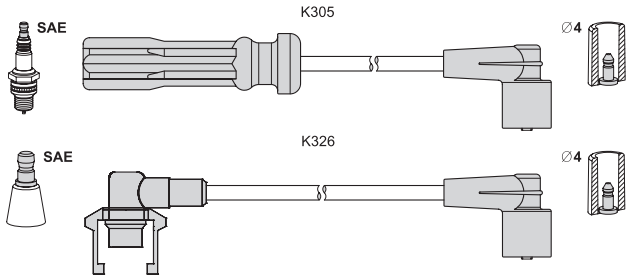

Volvo 740 (744) 2.0	09.88 - 08.90	76	B 200 K
740 (744) 2.3	08.84 - 07.90	84	B 230 F
740 Combi (745) 2.0	09.88 - 08.90	76	B 200 K

T114C K143 115 105 85 110 -

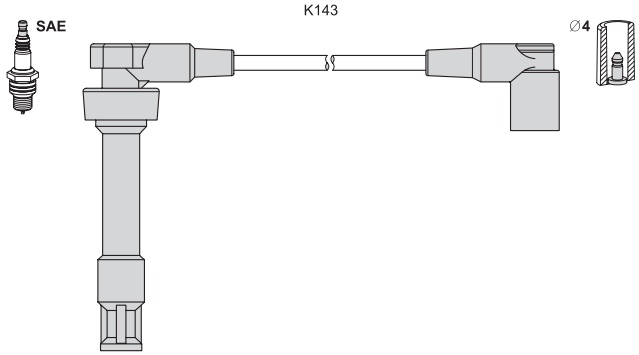

BMW 318 is (E30) 1.8	09.89 - 08.91	100	M42 B18

T116B K211 18 14 24 26 -

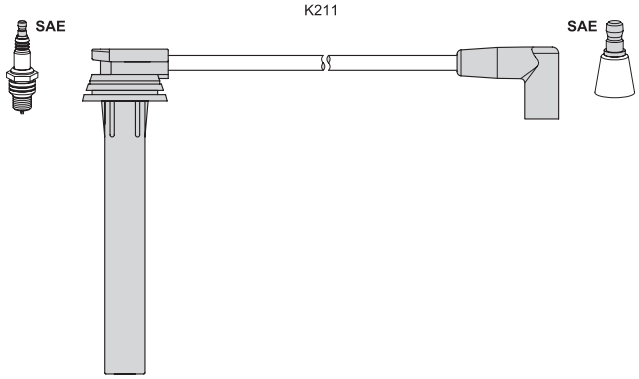

Chrysler Neon II 1.6	11.01 - 12.06	85	EJD
Neon II 2.0 16V	08.99 - 12.06	98	420H
PT Cruiser (PT_) 1.6	11.01 - 12.10	85	EJD
Mini Mini (R50, R53) 1.4 One	04.03 - 09.06	55	W10B14A
1.6 Cooper	06.01 - 09.06	85	W10B16A
1.6 Cooper S	03.02 - 09.06	120	W11B16A
1.6 Cooper S	07.04 - 09.06	125	W11B16A
1.6 One	06.01 - 09.06	66	W10B16A
1.6 Works	11.03 - 09.06	155	W11B16A
Mini Cabrio 1.6 Cooper	07.04 - 11.07	85	W10B16A

< T116B			
Mini Mini Cabrio1.6 Cooper S	07.04 - 11.07	125	W11B16A
1.6 J. Cooper Works	07.04 - 11.07	155	W11B16A
1.6 One	07.04 - 11.07	66	W10B16A

T117B K307 81 37 64 30 58 15 -

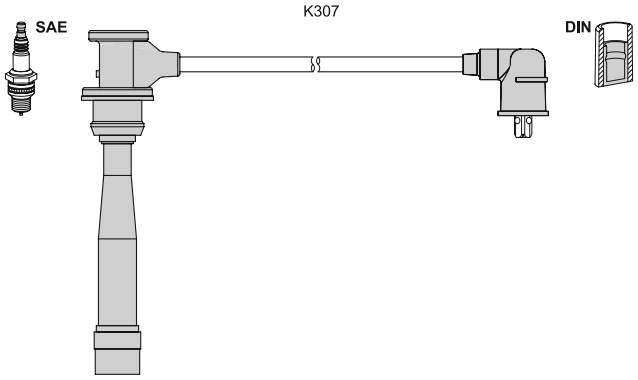

Hyundai Coupe (GK) 2.7 V6	03.02 - 08.09	123	G6BA-G
Santa Fé I (SM) 2.7 V6 4x4	02.01 - 03.06	127	G6BA-G
Sonata IV (EF) 2.5 V6 24V	06.98 - 10.01	118	G6BV-G
Sonata IV (EF) 2.7 V6 (RUS)	10.01 - 11.04	127	G6BA-G
Trajet (FO) 2.7 V6	09.00 - 07.08	127	G6BA-G
Tucson (JM) 2.7 Allrad	08.04 - 03.10	129	G6BA-G
XG 25 2.5	12.98 -	120	G6AV
Kia Magentis (GD) 2.5 V6	05.01 -	124	G6BV
Sportage (JE) 2.7 V6 4WD	09.04 -	129	G6BA

T118B K145 54 40 32 23 -

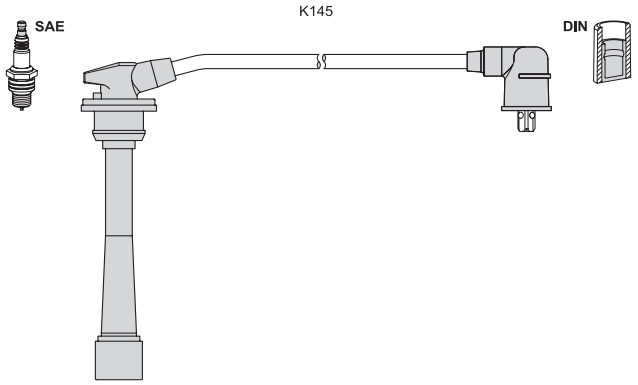

Hyundai Accent II (LC) 1.6	12.02 - 11.05	77	G4ED-G
Accent III (MC) 1.6 GLS	11.05 - 11.10	82	G4ED
Accent Sedan (LC) 1.6	12.02 - 11.05	77	G4ED-G
Accent Sedan (MC) 1.6 GLS	11.05 - 11.10	82	G4ED
Coupe (RD) 2.0 16V	03.01 - 04.02	99	G4DF
Coupe (GK) 1.6 16V	03.02 - 08.09	77	G4ED-G
1.6 16V	03.02 - 08.09	79	G4ED-G
2.0	08.01 - 08.09	100	G4GC-G
2.0	03.02 - 08.09	102	G4GC-G
2.0 GLS	02.03 - 08.09	105	G4GC-G
Elantra (XD) 1.6	06.00 - 07.06	66	G4GR
1.6 (RUS)	05.03 - 07.06	77	G4ED-G
1.8	06.00 - 07.06	97	G4BB
2.0	06.00 - 07.06	102	G4GC-G
2.0	06.00 - 07.06	104	G4GC
2.0	10.03 - 07.06	105	G4GC
Elantra Sedan (XD) 1.6	06.00 - 07.06	66	G4GR
1.6	05.03 - 07.06	77	G4ED-G
1.8	06.00 - 07.06	97	G4BB
2.0	06.00 - 07.06	102	G4GC-G
2.0	06.00 - 07.06	104	G4GC
2.0	10.03 - 07.06	105	G4GC

T 118B ▶

< T118B			
Hyundai i30 2.0	10.07 - 11.11	105	G4GC-G/G4GC
Matrix (FC) 1.8	06.01 - 08.10	90	G4GB-G
Trajet (FO) 2.0	03.00 - 02.04	100	G4JP-G
2.0	01.04 - 02.04	103	G4GC-G
Tucson (JM) 2.0	08.04 - 03.10	104	G4GC
2.0 Allrad	08.04 - 03.10	104	G4GC
Kia Carens II (FJ) 2.0 CVVT	08.04 -	102	G4GC
Cee´d CC (ED) 2.0	12.06 -	105	G4GC
Cee´d SW (ED) 2.0	09.07 -	105	G4GC
Cerato (LD) 1.6	07.04 -	77	G4ED
2.0	04.04 -	105	G4GC
Cerato Sedan (LD) 1.6	04.04 -	77	G4ED
2.0	04.04 -	105	G4GC
Sportage (JE) 2.0i 16V	09.04 -	104	G4GC
2.0 16V 4WD	09.04 -	104	G4GC

T119B K217 70 60 60 50 50 45 K458 20

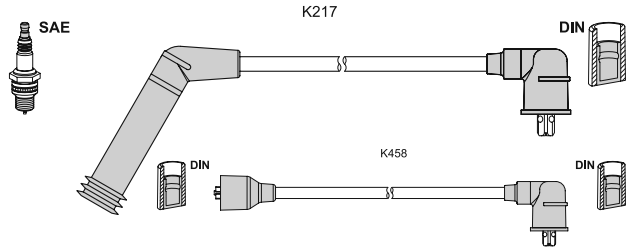

Hyundai Galloper II 3.0 V6	08.98 - 12.03	104	G6AT

T120B K217 30 30 40 40 60 70 K458 40

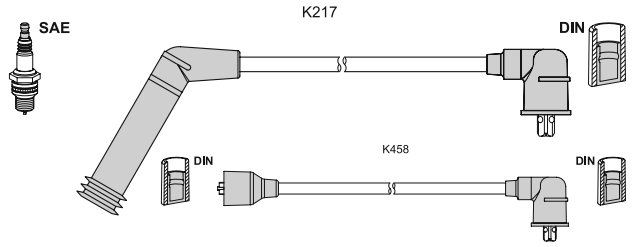

Hyundai Sonata II 3.0 i V6	01.91 - 10.93	107	G6AT
Sonata III (Y-3) 3.0 i V6	05.93 - 06.98	107	G6AT

T121B K309 60 50 K308 35 25 15 K220-45 K061 75

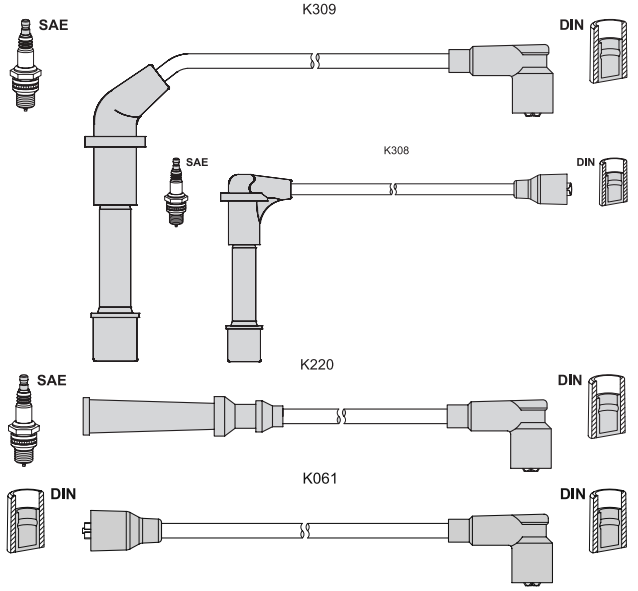

Nissan Pathfinder 3.0 Allrad	07.86 - 08.89	95	VG30I

T122H K012 30 40 50 40 K062 40

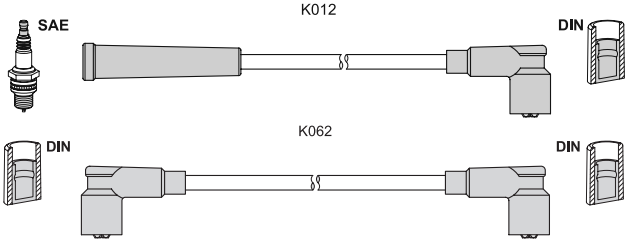

application → T368S

T123P K385 22 35 43 55 K384 22

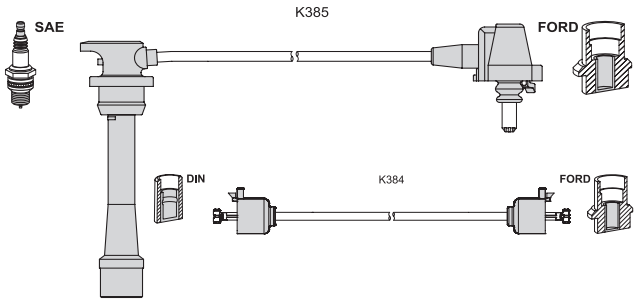

Toyota Previa (TCR1_, 2_) 2.4	05.90 - 08.00	97	2TZ-FE
2.4 4WD	05.90 - 08.00	97	2TZ-FE
2.4 GX	01.94 - 07.97	110	2TZ-FZE

T124G K313 72 59 45 64 45 45 K062 57

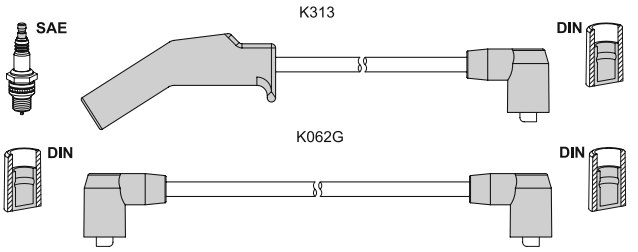

Ford Scorpio I (GAE, GGE) 2.4 i	10.88 - 02.92	92	ARD
2.4 i cat	10.88 - 09.94	92	ARD
2.9 i cat	09.88 - 09.94	107	BRE
Scorpio I Combi (GGE) 2.4 i	09.91 - 09.94	92	ARD
Scorpio I Sedan (GGE) 2.4 i	10.88 - 10.94	92	ARD
Sierra (GBG, GB4) 2.9	08.88 - 02.93	110	B4B/B4C
2.9 4x4	08.88 - 02.93	107	B4B/B4C
2.9 i	08.88 - 02.93	107	B4B/B4C
2.9 i 4x4	08.88 - 02.93	110	B4B/B4C
Sierra Hatchback 2.9 i	08.88 - 02.93	107	B4B/B4C
2.9 i XR 4x4	08.88 - 02.93	110	B4A
2.9 i XR 4x4	08.88 - 02.93	107	B4B/B4C
Sierra Combi (BNG) 2.9	08.88 - 02.93	107	B4B/B4C
2.9 4x4	08.88 - 02.93	107	B4B/B4C
2.9 i	08.88 - 02.93	110	B4B/B4C
2.9 i 4x4	08.88 - 02.93	110	B4B/B4C

T125G K172 72 56 45 72 45 47 K030 63

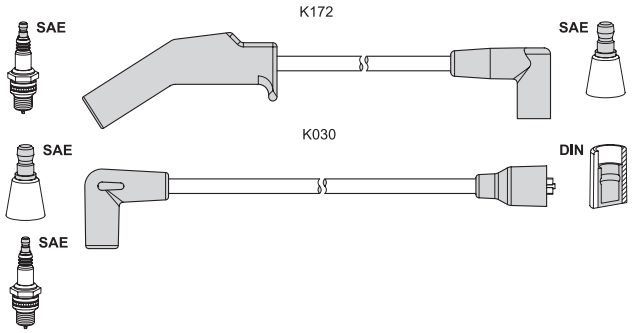

Ford Scorpio I (GAE, GGE) 2.4 i	10.88 - 02.92	92	ARD
2.4 i	09.86 - 06.87	96	ARC
2.4 i cat	10.88 - 09.94	92	ARD
2.9 i	09.86 - 09.94	107	BRD/BRE/BRF
2.9 i 4x4	05.88 - 02.93	107	BRD/BRE/BRF
2.9 i cat	10.87 - 08.88	107	BRE
Scorpio I Sedan (GGE) 2.4 i	09.91 - 09.94	92	ARD
2.9 i	09.91 - 09.94	107	BRD/BRE/BRF
2.9 i 4x4	05.88 - 02.93	107	BRD/BRE/BRF
Scorpio I Combi (GGE) 2.4 i	10.88 - 10.94	92	ARD
2.9 i	09.86 - 12.94	107	BRD/BRE/BRF
2.9 i 4x4	12.89 - 10.94	107	BRD/BRE/BRF

T128B K010 50 55 45 35 K060 50

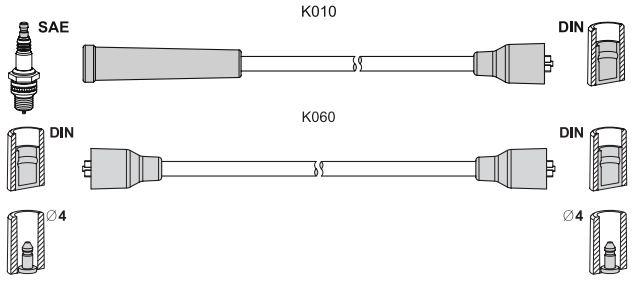

Fiat Panda (141A_) 800 0.8	02.81 - 12.85	25	
950 0.95	09.82 - 08.83	35	A 112 B1.054
950 4x4 0.95	09.83 - 12.86	35	A 112 B1.054

T129B K109 40 50 60 70 K012 50

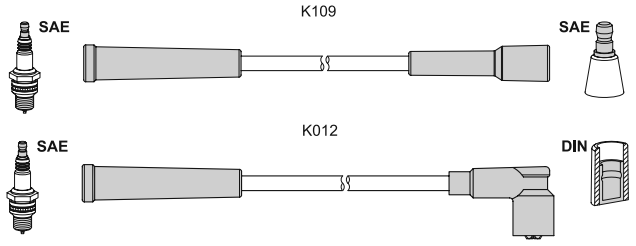

Fiat Panda (141A_) 750 0.75	01.86 - 01.95	25	156 A4.000
750 0.75 cat	01.95 - 12.97	25	156 A4.048
1000 1.0	01.86 - 04.92	32	156 A2.100
1000 1.0	01.85 - 12.92	37	156 A3.000
1000 1.0 4x4	01.86 - 07.89	32	156 A3.100/_ A2.100
1000 1.0 4x4	01.86 - 12.92	37	156 A3.000
Panda Van (141_) 1.0	01.86 - 02.92	32	156 A3.100/_ A2.100
Tipo (160) 1.1	01.88 - 10.91	41	160 A3.000
Uno 45 (146A/E) 1.0	06.86 - 12.93	32	156 A2.048/_ A2.100
1.0 i.e.	04.84 - 10.95	33	156 A2.246
Uno 50 (146A/E) 1.1	01.86 - 12.89	37	146 A4.044
1.1	01.90 - 12.93	37	156 C.046
1.1 i.e.	06.92 - 12.93	36	146 C3.000
Uno 60 (146A/E) 1.1	04.89 - 12.92	42	160 A3.000
Uno (146A/E) 1.0	11.94 - 08.00	35	146 A2.166

< T129B

Lancia Y10 (156) 1.0 Fire	06.85 - 06.91	32	156 A 2.100
1.0 Fire Allrad	12.86 - 02.89	32	156 A 2.100
1.1 i.e Fire	07.89 - 09.92	37	156 C.046
1.1 i.e Fire Allrad	09.92 - 12.95	37	156 C.046
1.1 i.e.	08.89 - 06.92	42	156 C.000
1.1 i.e. Allrad	08.89 - 06.92	42	156 C.000

T130G K313 75 61 44 64 44 44 K062 73

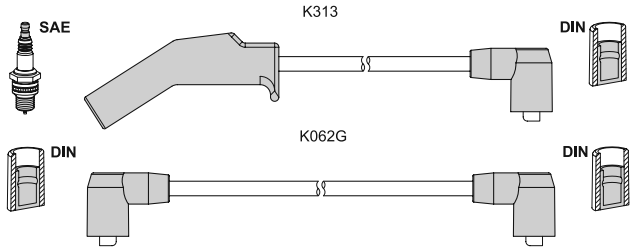

Ford Scorpio II 2.9 i	02.95 - 08.98	110	BRG
Scorpio II Combi 2.9 i	02.95 - 08.98	110	BRG
Transit Bus (E_ _) 2.9 i	01.91 - 09.94	107	BRT

T131B K310 75 70 65 65 55 55 40 40 -

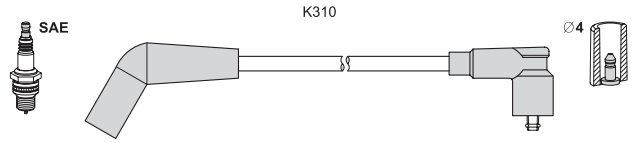

Landrover Discovery II 4.0 V8	11.98 - 06.04	136	56 D
Range Rover II (LP) 3.9	07.94 - 03.02	140	42 D
4.0	06.98 - 03.02	136	42 D
4.6	07.94 - 03.02	165	46 D
4.6	06.98 - 03.02	160	60 D

T132B K453 35 50 55 K187 30 K061 90

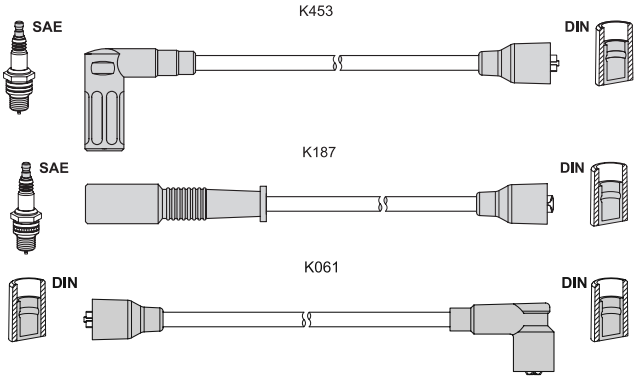

Fiat Regata 70 (138) 1.3	09.83 - 07.89	48	149 A3.000/_ A7.000
1.3	09.83 - 09.85	50	138 B2.000
Regata 70 Weekend 1.3	01.84 - 09.85	50	138 B2.000

T133B K010 30 35 40 50 K060 45

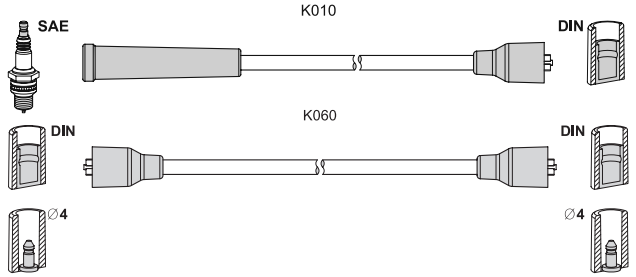

Fiat Regata 75 (138) 1.5	12.83 - 12.87	55	138 C3.048/_B3.048

T 133B ▶

< T133B			
Fiat Regata 75 (138) 1.5 i.e.	07.85 - 07.89	55	149 C1.000
Regata 75 Weekend 1.5	09.84 - 07.89	55	138 C3.048/_B3.048
1.5 i.e. cat	12.86 - 07.89	55	138 C2.048

T134H K010 40 45 45 55 K075 60

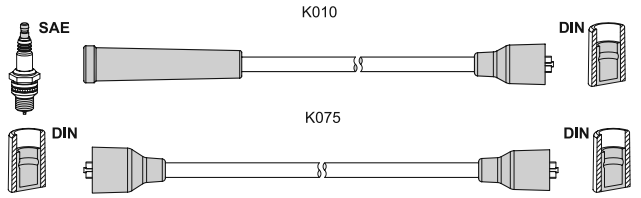

application → T355S

T135H K012 50 55 65 70 K079 30

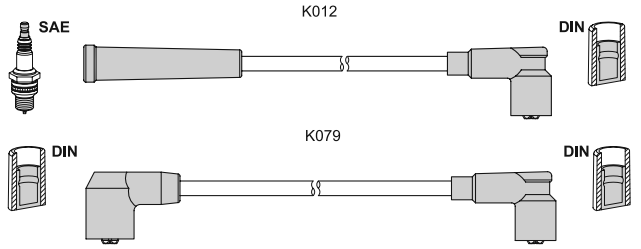

application → T356S

T136H K010 30 50 60 70 K075 80

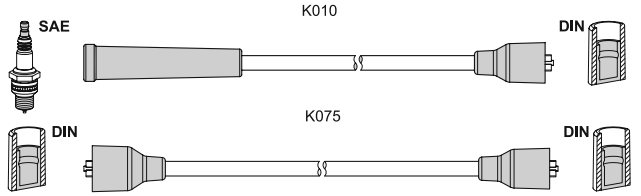

application → T357S

T137H K012 30 35 40 45 K077 40

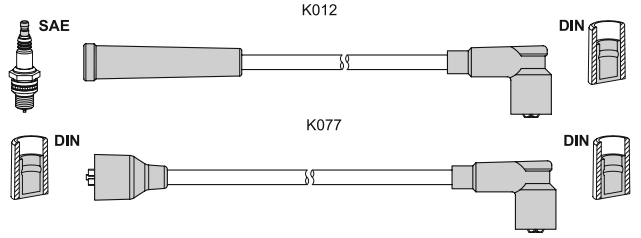

application → T367S

T138B K183 75 65 55 50 K184 70 65 60 60 -

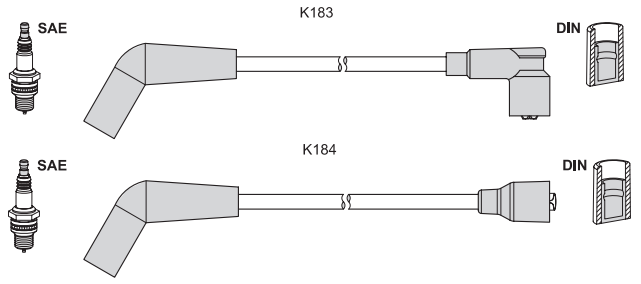

Landrover Discovery I 3.5	10.89 - 06.94	113	22 D
3.9 V8	09.93 - 10.98	134	36 D/35 D
Range Rover I 3.5	07.70 - 08.81	97	11 D

< T138B			
Landrover Range Rover I 3.5	10.85 - 08.91	96	
3.5	01.87 - 09.90	107	31 D
3.5 Vogue	10.85 - 09.90	120	25 D/24 D
Range Rover II (LP) 3.9	07.94 - 03.02	140	42 D
4.6	07.94 - 03.02	165	46 D

T139B K107 29 44 44 44 59 61 K076 47

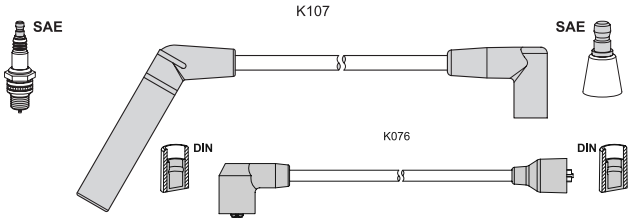

Chrysler New Yorker 3.5 i 24V	04.93 - 09.98	155	F01
Voyager II (ES) 3.3 i	08.90 - 09.95	110	EGA
3.3 i	08.90 - 09.95	120	EGA
3.3 i AWD	08.90 - 09.95	110	EGA
3.3 i AWD	08.90 - 09.95	120	R00
Voyager III (GS) 3.3 i	01.95 - 03.01	116	R00
3.8 i AWD	01.95 - 03.01	122	L00
3.8 i AWD	01.95 - 03.01	131	EGH

T140G K012 50 60 70 80 K060 50

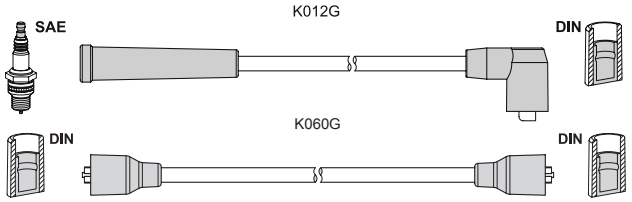

Ford Escort '86 Express 1.4i	02.86 - 07.90	54	F6D/F6B/FUC
Escort II (ATH) 1.1	12.74 - 08.80	32	G1
1.1	06.75 - 08.80	34	G1
1.1	12.74 - 08.80	35	G2
Escort II Combi 1.1	04.75 - 08.80	32	G1
1.1	04.75 - 08.80	35	G2
Escort III (GAA) 1.1	08.83 - 12.85	37	GSE
1.1	09.80 - 08.83	40	GMA/GLB
1.1	09.80 - 08.83	43	GPA
1.3	09.80 - 12.85	51	JPA
1.6	09.80 - 12.85	58	LP1/LPA
Escort III Cabriolet 1.3	09.83 - 12.85	51	JPA
1.6	09.83 - 12.85	58	LP1/LPA
Escort III Combi 1.1	08.83 - 12.85	37	GSE
1.1	09.80 - 08.83	40	GMA/GLB
1.3	03.81 - 12.85	51	JPA
1.6	09.80 - 12.85	58	LP1/LPA
Escort IV 1.1	12.85 - 07.90	37	GSG
1.4	01.86 - 07.90	54	F6D/F6B/FUC
1.4	01.86 - 07.90	55	FUA
1.6 XR3i	01.86 - 08.89	77	LRB/LR2
Escort IV Cabriolet 1.4	02.87 - 07.90	54	F6D/F6B/FUC
1.4	01.86 - 07.90	55	FUA
1.6 XR3i	01.86 - 07.90	77	LRB/LR2
Escort IV Combi 1.1	10.85 - 09.90	37	GSG
1.4	01.86 - 07.90	54	F6D/F6B/FUC
1.4	01.86 - 07.90	55	FUA
1.6	04.87 - 08.89	77	LRB
Orion II (AFF) 1.4	03.86 - 07.90	52	FUAA

T141G K049 50 60 70 60 70 85 K030 60

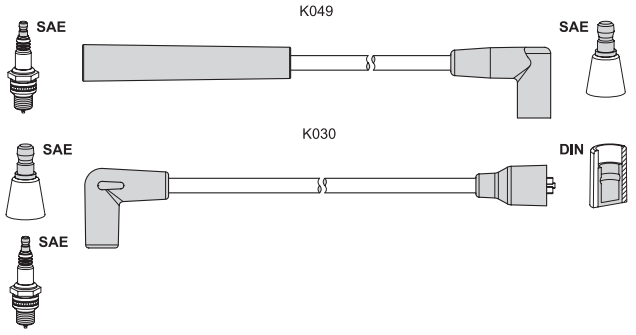

Ford Scorpio I 2.8 i	04.85 - 11.86	110	PRE
2.8 i 4x4	10.85 - 11.86	110	PRE
2.9 i	09.86 - 09.94	110	BRC
2.9 i 4x4	09.86 - 09.94	110	BRC

T143G K499 104 91 77 71 -

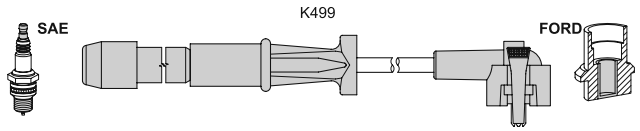

Ford Galaxy (WGR) 2.0 i	11.95 - 03.00	85	NSE

T144B K037 60 75 80 K010 50 K060 28

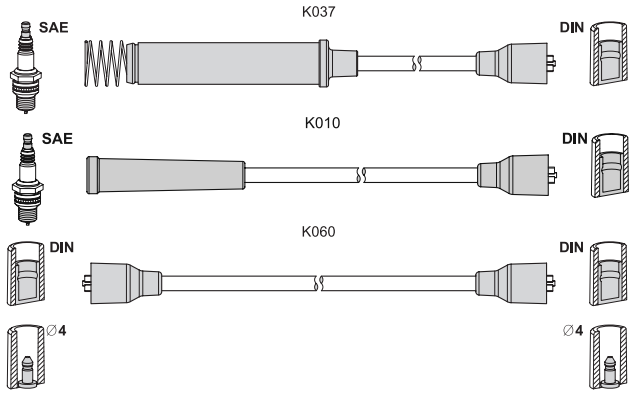

Opel/Vauxhall Vectra A 1.4 S	09.88 - 12.90	55	14 NV
Vectra A CC 1.4 S	09.88 - 12.90	55	14 NV

T145H K012 25 40 50 35 K064 30

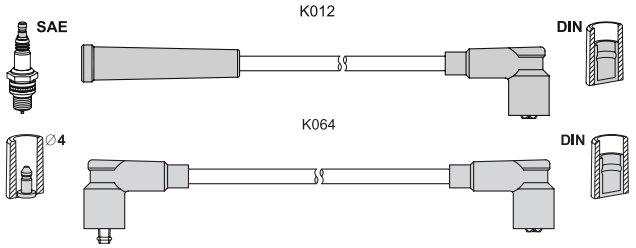

application → T371S

T146G K340 60 65 75 85 K062 60

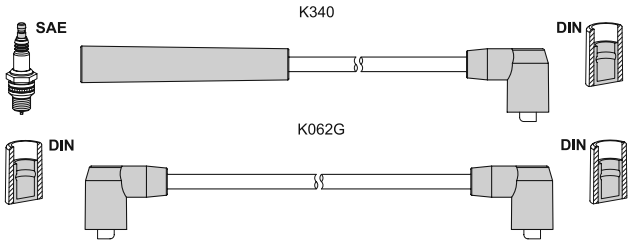

Ford Scorpio I 2.0 i	01.86 - 12.90	74	NRC
Sierra (GBG, GB4) 1.6	01.87 - 02.93	55	LSE
1.6	01.88 - 02.93	53	LSF
1.6 i	10.89 - 02.93	59	L6B
Sierra Hatchback 1.6	01.87 - 02.93	55	LSE
1.6	01.88 - 02.93	53	LSF
1.6 i	10.89 - 02.93	59	L6B
Sierra Combi (BNG) 1.6	01.88 - 02.93	53	LSF
1.6	01.87 - 02.93	55	LSE
1.6 i	10.89 - 02.93	59	L6B
Transit Bus (V__ _) 1.6	12.77 - 10.86	48	4RB
2.0	11.77 - 10.86	55	4RC
Transit Van (V__ _) 1.6	11.77 - 10.86	48	4RB
2.0	11.77 - 10.86	55	4RC
Transit Bus (T__ _) 1.6	12.85 - 01.89	46	LAT
2.0	12.85 - 09.92	57	N6T
Transit Van (T__ _) 1.6	09.85 - 09.92	46	LAT
Transit Flatbed 2.0 cat	11.85 - 09.92	57	N6T
Transit Bus (E__ _) 2.0	09.91 - 09.94	66	NBA
2.0 i	09.91 - 07.94	72	NCA
Transit Flatbed (E__ _) 2.0	09.91 - 08.94	72	NCA
Transit Van (E__ _) 2.0	09.91 - 06.94	66	NBA
2.0 i	09.91 - 06.94	72	NCA

T147B K036 70 65 50 K013-40 K070 50

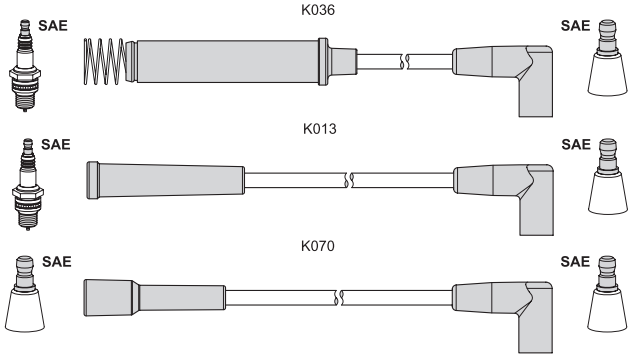

Daewoo Cielo 1.5	04.95 - 07.97	55	Y15L
Nexia 1.5	04.95 - 07.97	55	Y15L
Racer 1.5	86 - 94	55	G15

T148B K010 30 30 40 50 K061 50

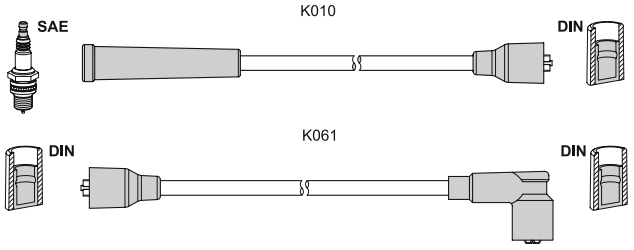

Fiat 131 1.3 Mirafiori	10.74 - 09.81	40	131 A6.000
1.3 Mirafiori	10.74 - 12.82	48	131 A.000

T 149B ▶

T149B K315 28 31 36 40 K062 60

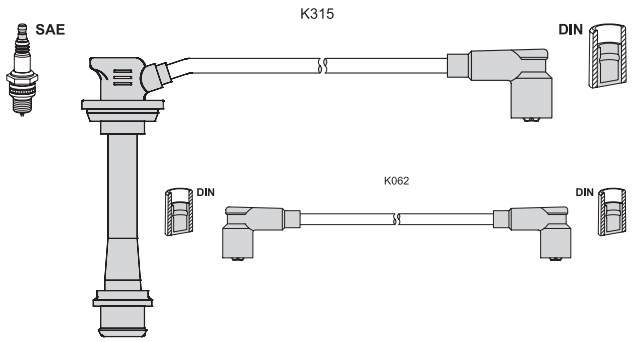

Toyota Celica 1.6 GT 16V	04.86 - 08.89	91	4A-GEL
Celica Liftback 1.6 GT	08.87 - 08.89	85	4A-GELC
1.6 GT 16V	09.85 - 08.89	91	4A-GEL
Corolla Comp. (E9) 1.6 GTI	08.87 - 04.92	85	4A-GE
Corolla Coupe 1.6 16V	12.85 - 04.87	85	4A-GEC
1.6 GT 16V	08.83 - 07.87	91	4A-GE
Corolla FX Comp. 1.6 GT	08.85 - 08.87	89	4A-GEL
Corolla Liftb. (E9) 1.6 GTI	07.87 - 06.93	92	4A-GE
MR 2 (_W1_) 1.6 16V	11.84 - 06.90	85	4A-GELC
	11.84 - 06.90	91	4A-GEL

T150B K414 54 58 66 K458 68

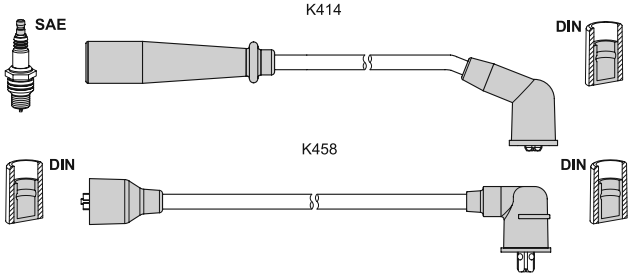

Daewoo Damas 0.8	91 - 04	28	F8CB, F8CL, F8A
Damas II 0.8	95 -	28	F8CL

T151P K560 26 38 K571 41 56 K564 28

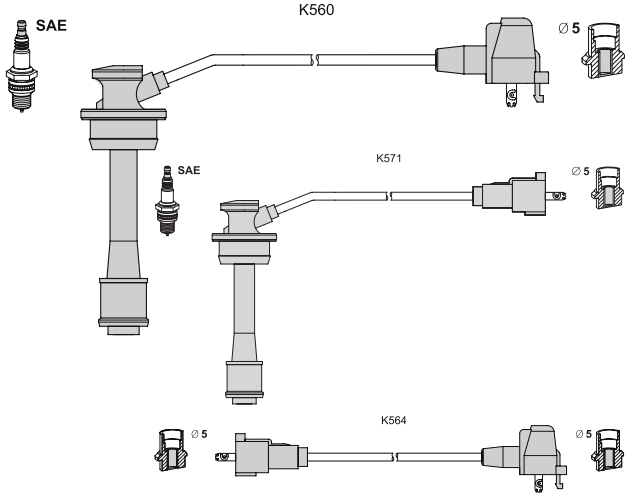

Toyota MR 2 II (SW2_) 2.0 16V	12.89 - 05.00	115	3S-GE
2.0 16V	12.89 - 05.00	125	3S-GE
2.0 16V	12.89 - 05.00	129	3S-GE

T152G K340 65 70 45 65 45 50 K062 85

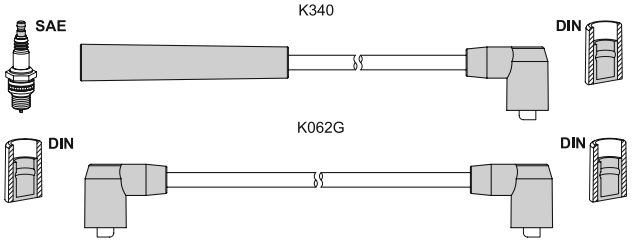

Ford Sierra Hatch. (GBC) 2.0	08.82 - 10.84	66	NYT
2.3	08.82 - 12.86	84	YYT
2.8 XR4i	09.83 - 12.86	107	PR5/PR6
2.8 i XR 4x4	02.85 - 12.86	110	PRT
2.8 XR4i	08.82 - 12.86	110	PRT
2.8 XR 4x4	08.82 - 12.86	107	PR5
2.8 i XR 4x4	01.87 - 08.88	110	PRG
Sierra Combi (BNC) 2.0	08.82 - 10.84	66	NYT
2.3	08.82 - 12.86	84	YYT
2.8 XR4i	08.82 - 12.86	105	PR6
2.8 i 4x4	08.82 - 12.86	107	PR6
2.8 XR4i	08.82 - 12.86	105	PR6
2.8 i 4x4	08.82 - 12.86	107	PR5
Sierra Combi 2.8 4x4	01.87 - 08.88	110	PRG

T153C K098 80 77 66 66 59 - alternative T081B

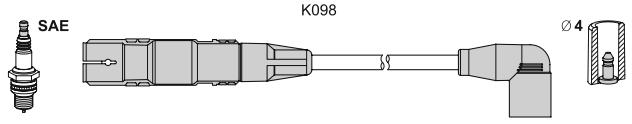

VW Bora (1J2) 2.3 V5	10.98 - 10.00	110	AGZ
2.3 V5 4motion	12.98 - 12.98	110	AGZ
Golf IV (1J1) 2.3 V5	08.97 - 10.00	110	AGZ
2.3 V5 4motion	12.98 - 04.99	110	AGZ

T154G K195 80 71 62 59 113 103 107 105 K061 41

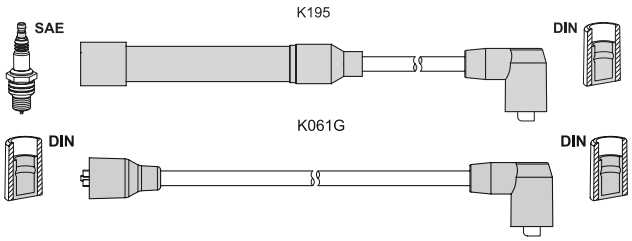

Tatra T 613 3.5	73 - 96	121	613-4, 613-E1

T155*) K002 45 50 55 -

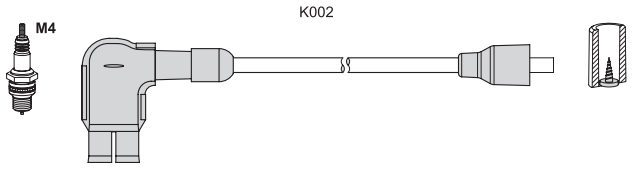

Wartburg 353 1.0	02.75 - 08.88	37	353.18
353 Tourist 1.0	02.75 - 08.88	37	353.18

*) set with red 7 mm PVC cable, copper core
комплект с красным 7 мм ПВХ проводом, медный сердечник
sada z červeného 7 mm PVC kabelu, měděné jádro

T156*) K612 45 50 -

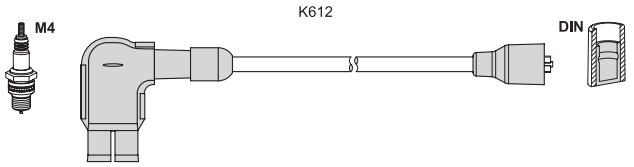

Trabant 601 Sedan 0.6	03.70 - 04.90	19	P63/64, P65/66
Cabrio 0.6	03.70 - 04.90	19	P63/64, P65/66
Combi 0.6	03.70 - 04.90	19	P63/64, P65/66

T159B K513 88 75 72 36 28 28 -

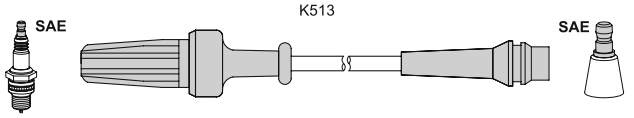

Renault Espace III (JE0_) 3.0	11.96 - 10.98	123	Z7X 775
Laguna I (B56_, 556_) 3.0	11.93 - 03.01	123	Z7X 765/Z7X 760
Laguna Grandtour 3.0	02.96 - 03.01	123	Z7X 765

T160B K328 70 55 40 102 90 75 K326 70

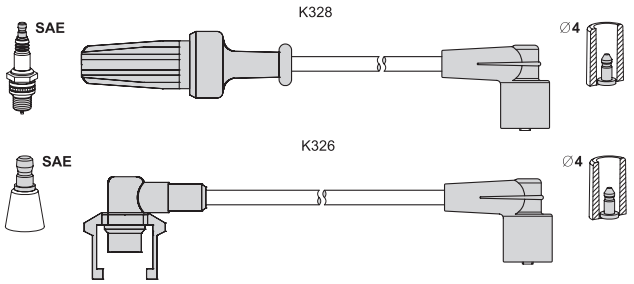

Renault 25 (B29_) 2.8 V6	06.87 - 02.90	115	Z7W 700
2.8 V6	06.87 - 12.92	110	Z7W 706/_707/_709
Espace II (J/S63_) 2.8 V6	01.91 - 10.96	110	Z7W 717/_712/_713

T162B K036 75 65 55 K013-40 K070 40

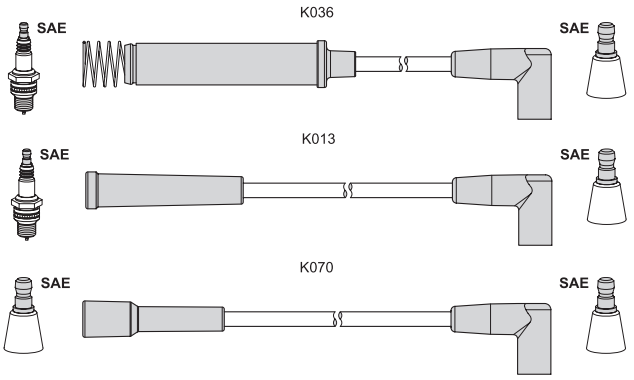

Opel Ascona C 1.6	09.86 - 08.88	60	16 SV
Ascona C CC 1.6	09.86 - 08.88	60	16 SV
Kadett E (39_, 49_) 1.6 i	09.86 - 08.91	55	E 16 NZ
1.6 i cat	09.86 - 08.91	55	C 16 NZ/C 16 LZ
1.6 S	09.86 - 08.91	60	16 SV
Kadett E Cabrio 1.6 i	10.86 - 02.93	55	E 16 NZ
1.6 i	07.89 - 02.93	60	16 SV
1.6 i cat	10.87 - 02.93	55	C 16 NZ/C 16 LZ
Kadett E Caravan 1.6 i	09.86 - 08.91	60	16 SV
1.6 i	09.86 - 08.91	55	E 16 NZ
1.6 i cat	09.86 - 08.91	55	C 16 NZ/C 16 LZ
Kadett E CC 1.6 i	09.86 - 08.91	55	E 16 NZ
1.6 i cat	09.86 - 08.91	55	C 16 NZ/C 16 LZ

*) set with red 7 mm PVC cable, copper core
комплект с красным 7 мм ПВХ проводом, медный сердечник
sada z červeného 7 mm PVC kabelu, měděné jádro

< T162B

Opel Kadett E CC 1.6 S	09.86 - 08.91	60	16 SV
Kadett E Combo 1.6	09.86 - 12.91	60	16 SV
Opel/Vauxhall Astra F 1.6 i	03.92 - 09.98	55	C 16 NZ
Astra F Caravan 1.6 i	09.91 - 01.98	55	C 16 NZ
Astra F CC 1.6 i	09.91 - 01.98	55	C 16 NZ
Corsa A CC 1.6 GSI	08.88 - 09.92	55	C 16 NZ

T163B K034 90 80 70 K014-40 K067 95

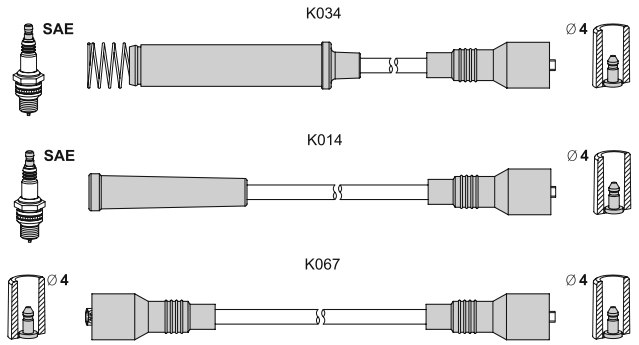

Opel/Vauxhall Frontera A Sport 2.0 i	03.92 - 10.98	85	C 20 NE
Omega A 1.8	09.87 - 03.94	65	E 18 NVR
1.8	09.86 - 03.94	85	18 SEH
1.8 N	09.86 - 08.87	60	18 NV
1.8 S	09.86 - 03.94	66	18 SV
2.0	09.86 - 03.94	90	20 SE
2.0	09.90 - 03.94	74	C 20 NEF
2.0	09.90 - 03.94	73	C 20 NEJ
2.0 i	09.86 - 03.94	85	C 20 NE
Omega A Caravan 1.8	09.87 - 03.94	65	E 18 NVR
1.8	09.86 - 03.94	85	18 SEH
1.8 N	09.86 - 08.87	60	18 NV
1.8 S	09.86 - 03.94	66	18 SV
2.0	09.86 - 03.94	90	20 SE
2.0	09.90 - 03.94	74	C 20 NEF
2.0 i	09.90 - 03.94	73	C 20 NEJ
2.0 i	09.86 - 03.94	85	C 20 NE

T164G K162 75 85 95 100 -

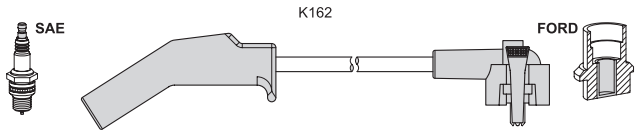

Ford Escort VII 1.3	01.95 - 08.98	44	J4B
Escort VII Combi 1.3	01.95 - 08.98	44	J4B
Escort VII Sedan 1.3	01.95 - 08.98	44	J4B
Fiesta IV (JA_, JB_) 1.0 i	02.97 - 09.98	38	ZH10JRB
1.3 i	08.95 - 08.98	37	JJA/_E/_M/_C/_J/_K
1.3 i	08.95 - 08.98	44	J4R/_C/_L/_JJ_Q/J4T
Fiesta Van (J5_, J3_) 1.3	02.96 - 08.98	44	J4C
Ka (RB_) 1.3 i	06.98 - 09.98	36	JJH/JJD/JJF/JJG/JJL
1.3 i	09.96 - 08.98	44	J4S/_K/_M/_P/_N
Mazda 121 III (JASM, JBSM) 1.3	03.96 - 04.03	37	JJM/JJK
1.3	03.96 - 04.03	44	J4R/J4T

T 165C ▶

T165C K341 100 88 85 72 73 58 -

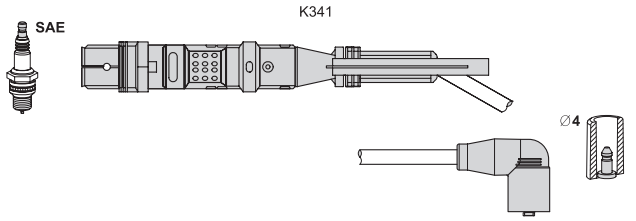

Seat Leon (1M1) 2.8 Cupra 4	02.01 - 06.06	150	AUE
VW Bora (1J2) 2.8 V6 4motion	03.99 - 04.01	150	AQP/AUE/BDE
Bora Combi 2.8 V6 4motion	05.99 - 05.05	150	AQP/AUE/BDE
Golf IV 2.8 V6 4motion	05.99 - 04.01	150	AQP/AUE
Golf IV Variant 2.8 V6 4mot.	05.99 - 04.01	150	AQP/AUE
Sharan (7M_) 2.8 V6 24V	04.00 - 03.10	150	AYL
2.8 V6 24V 4 motion	04.00 - 03.10	150	AYL

T166B K037 80 80 70 K010-40 K060 50

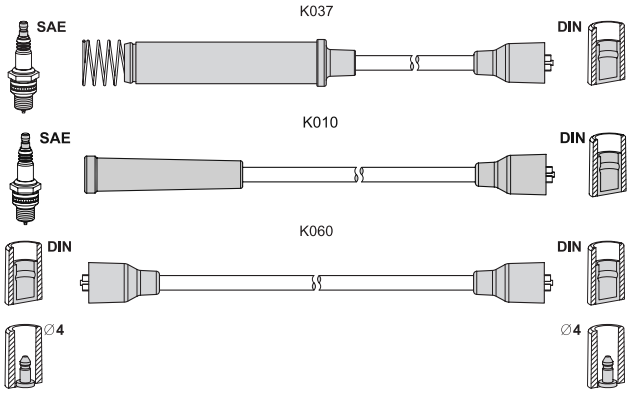

Opel Kadett E (39_, 49_) 1.8 S	09.87 - 08.91	62	E 18 NV
2.0 i	03.87 - 08.91	85	20 NE/20 SE
2.0 i cat	03.87 - 08.91	85	C 20 NE
Kadett E Cabrio 2.0 i	10.86 - 02.93	85	20 NE
2.0 i cat	10.86 - 02.93	85	C 20 NE
Kadett E Caravan 1.8 S	09.87 - 08.91	62	E 18 NV
2.0 i	09.87 - 08.91	85	20 NE
2.0 i cat	09.87 - 08.91	85	C 20 NE
Kadett E CC 1.8 S	09.87 - 08.91	62	E 18 NV/S 18 NV
2.0 GSI	09.86 - 08.91	85	20 NE
2.0 GSI	09.86 - 08.91	95	20 SEH
2.0 GSI cat	09.86 - 08.91	85	C 20 NE

T168B K029 70 60 50 50 K070 50

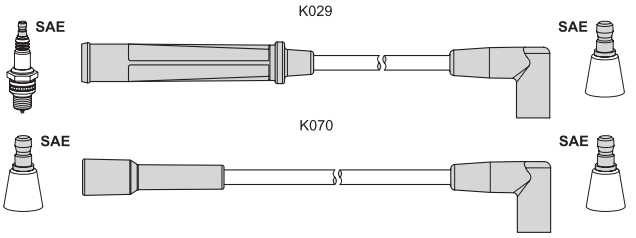

Opel Kadett D 1.2 S	08.79 - 08.84	44	12 S
1.3 N	08.79 - 08.84	44	13 N
Kadett D Caravan 1.2 S	08.79 - 08.84	44	12 S
1.3 N	08.79 - 08.84	44	13 N
Kadett E (39_, 49_) 1.3 i cat	09.85 - 08.91	44	C 13 N
1.3 N	09.84 - 08.89	44	13 NB/13 N
1.3 S	09.84 - 08.87	55	13 S
Kadett E Cabrio 1.3 S	03.87 - 02.93	55	13 S
Kadett E Caravan 1.3 i cat	09.85 - 08.91	44	C 13 N
1.3 N	09.84 - 08.91	44	13 N

< T168B

Opel Kadett E Caravan 1.3 S	09.84 - 08.87	55	13 S
Kadett E CC 1.3 i cat	09.85 - 08.91	44	C 13 N
1.3 N	09.84 - 08.91	44	13 NB/13 N
1.3 S	09.84 - 08.87	55	13 S
Kadett E Combo 1.3 N	01.86 - 12.89	44	13 N
1.3 S	01.86 - 12.89	55	13 S
Kadett E Van 1.3 N	09.84 - 07.89	44	13 NB/13 N
Manta B 1.3S	08.81 - 08.86	55	13 S
Manta B CC 1.3S	08.79 - 08.86	55	13 S

T169G K171 48 48 78 63 -

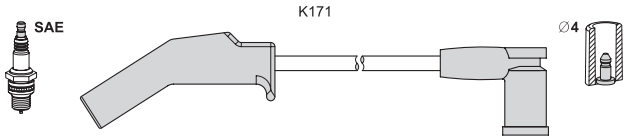

Ford Focus I (USA) 1.8	98 - 04		
2.0 split port	98 - 04	82	SOHC

T170C K351 24 24 24 K352 48 48 48 - alternative T092B

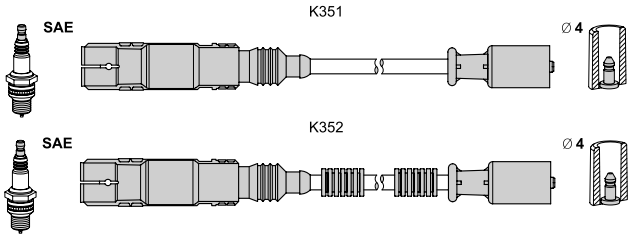

Smart Cabrio (450) 0.6	03.00 - 01.04	40	M 160 E6AL B03
0.6	01.01 - 01.04	45	M 160 E6AL B05
0.6	06.02 - 01.04	52	M 160.920
0.7	01.03 - 01.04	45	M 160.910
0.7	01.03 - 01.04	55	M 160.910
City-Coupe (450) 0.6	07.98 - 01.04	33	M 160 E6AL B04
0.6	07.98 - 01.04	40	M 160 E6AL B03
0.6	01.01 - 01.04	45	M 160 E6AL B05
0.6	06.02 - 01.04	52	M 160.920
0.7	01.03 - 01.04	37	M 160.910
0.7	01.03 - 01.04	45	M 160.910
0.7	01.03 - 01.04	55	M 160.910
Crossblade (450) 0.6	06.02 - 12.03	52	M 160.920
Fortwo Cabrio (450) 0.7	01.04 - 01.07	45	M 160.910
0.7	01.04 - 01.07	55	M 160.910
Fortwo Cabrio /451) 1.0	01.07 -	52	M 132.910
1.0 Turbo	01.07 -	62	M 132.930
Fortwo Coupe (450) 0.7	01.04 - 01.07	37	M 160.910
0.7	01.04 - 01.07	45	M 160.910
0.7	01.04 - 01.07	55	M 160.910
Fortwo Coupe (451) 1.0	01.07 -	45	M 132.910
1.0	01.07 -	52	M 132.910
1.0 Turbo	01.07 -	62	M 132.930
Roadster (452) 0.7	04.03 - 11.05	45	M 160.921
0.7	04.03 - 11.05	60	M 160.922
0.7 Brabus	12.03 - 11.05	74	M 160.923
Roadster Coupe (452) 0.7	06.03 - 11.05	45	
0.7	04.03 - 11.05	60	
0.7 Brabus	12.03 - 11.05	74	M 160.923

T173C K084 45 55 60 75 85 K084.1 90 (sensor) K100 80 — alternative T027B

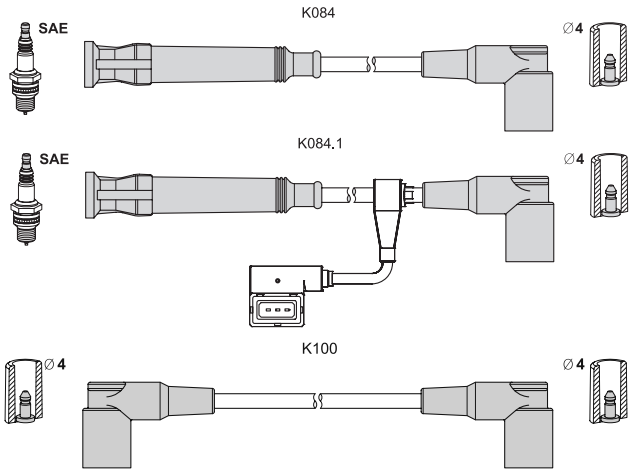

BMW 530 i (E34) 3.0	01.88 - 08.91	138	M30 B30
535 i, M 535 i (E28) 3.5	01.85 - 12.87	136	M30 B35
535 i, M 535 i (E28) 3.5	01.85 - 12.87	141	M30 B35 (Motronic)
535 i, M 535 i (E28) 3.5	01.85 - 12.87	160	M30 B35
535 i (E34) 3.5	01.88 - 09.95	155	M30 B35
730 i,iL (E32) 3.0	12.86 - 09.94	145	M30 B30
730 i,iL (E32) 3.0	12.86 - 09.94	138	M30 B30
735 i,iL (E32) 3.5	09.86 - 09.92	155	M30 B35
735 i,iL (E32) 3.5	09.86 - 12.87	162	M30 B35

T174C K086 50 55 60 75 85 K086.1 90 (sensor) K093 75 — alternative T031B

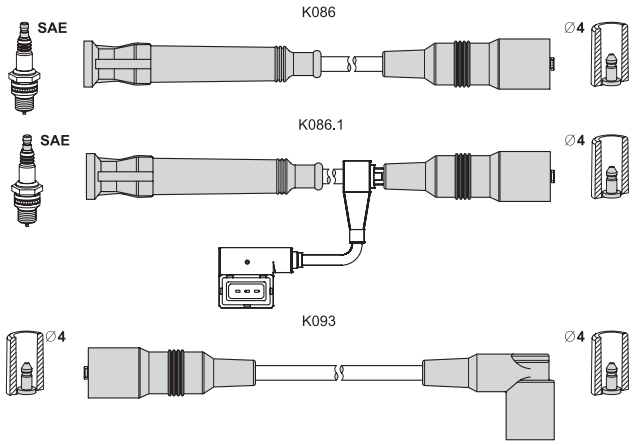

BMW 320 i (E30) 2.0	12.85 - 06.91	95	M20 B20
320 i Cabriolet (E30) 2.0	04.86 - 10.93	95	M20 B20
320 i Touring (E30) 2.0	01.88 - 12.91	95	M20 B20
325 e (E30) 2.7	10.83 - 12.88	90	M20 B27
325 i (E30) 2.5	12.86 - 06.91	125	M20 B25
325 i (E30) 2.5	09.83 - 11.89	126	M20 B25
325 i X (E30) 2.5	12.86 - 08.91	125	M20 B25
325 i Cabriolet (E30) 2.5	09.87 - 10.93	125	M20 B25
325 i Touring (E30) 2.5	07.87 - 03.93	125	M20 B25
325 i X Touring (E30) 2.5	06.88 - 10.93	125	M20 B25

T175C K086 50 55 60 75 85 K086.1 90 (sensor) K093 90 — alternative T033B

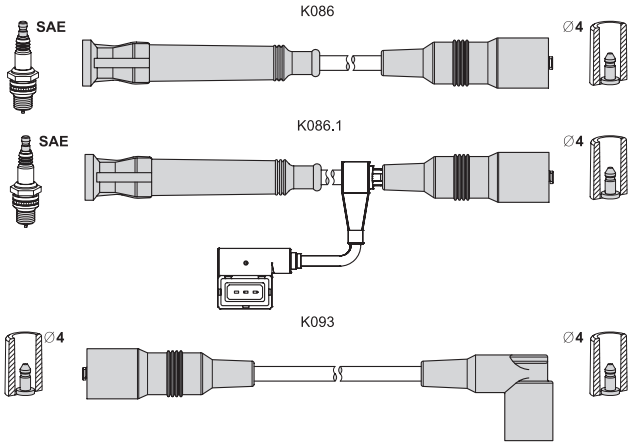

BMW 520 i (E28) 2.0	08.85 - 12.87	95	M20 B20
520 i (E34) 2.0	01.88 - 08.91	95	M20 B20
525 i (E34) 2.5	01.88 - 08.91	125	M20 B25

T176C K084 35 45 55 K084.1 65 (sensor) K100 75 — alternative T028B

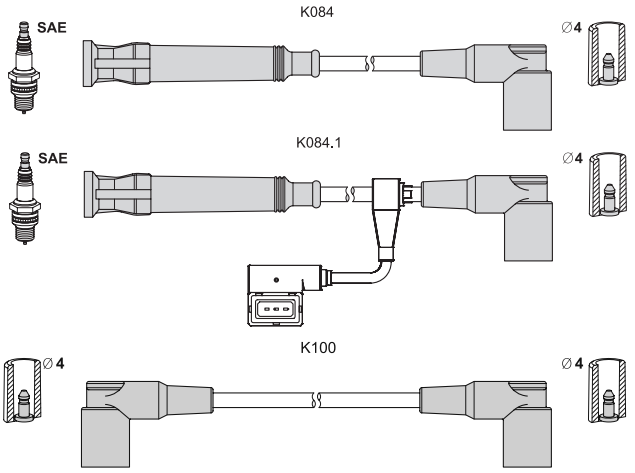

BMW 316 i (E30) 1.6	09.87 - 06.91	73	M40 B16
1.6	07.88 - 06.91	75	M40 B16
316 i Touring (E30) 1.6	09.91 - 06.94	73	M40 B16
1.6	09.91 - 06.94	75	M40 B16
316 i (E36) 1.6	09.90 - 09.93	73	M40 B16
1.6	09.90 - 09.93	75	M43 B16/M40 B16
318 i (E30) 1.8	09.87 - 06.91	85	M40 B18
1.8	09.87 - 06.91	83	M40 B18
318 i Cabriolet (E30) 1.8	09.90 - 10.93	83	M40 B18
318 i Touring (E30) 1.8	04.89 - 06.94	83	M40 B18
1.8	09.87 - 06.91	85	M40 B18
318 i (E36) 1.8	12.90 - 10.93	83	M40 B18

T177C K236 23 27 30 43 - — alternative T091B

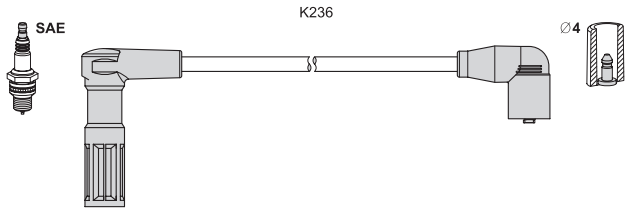

Fiat Punto (176) 1.4 GT Turbo	01.94 - 09.96	98	176 A4.000
1.4 GT Turbo	09.96 - 09.99	96	176 B6.000

T 178B ▶

T178B K501 58 28 K350 60 45 -

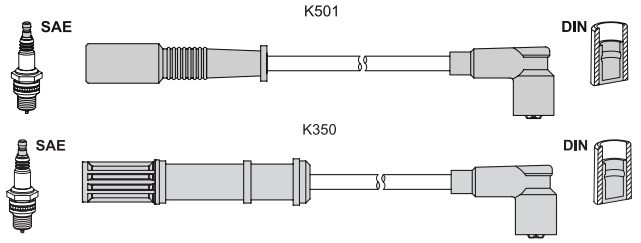

Fiat Doblo (119) 1.2	03.01 -	48	223 A5.000
Doblo Cargo (223) 1.2	03.01 -	48	223 A5.000
Palio (178BX) 1.0	04.96 -	45	
1.0	04.96 -	56	
1.2	07.97 - 08.02	44	188 A4.000
Palio Weekend 1.2	02.01 -	44	178 C4.066/188 A4._
Panda (169) 1.1	09.03 -	40	187 A1.000
1.2	09.03 -	44	188 A4.000
1.2 4x4	10.04 -	44	188 A4.000
1.2 Bi-Power	01.07 -	44	188 A4.000
1.2 LPG	04.09 -	44	188 A4.000
Panda Van (169) 1.2	09.04 -	44	188 A4.000
1.2 4x4	09.04 -	44	188 A4.000
Punto 60 (188) 1.2	09.99 -	44	188 A4.000
1.2 Natural Power	09.03 -	44	188 A4.000
Punto 60 Van (188AX) 1.2	02.00 - 10.09	44	188 A4.000
Seicento (187) 1.1	01.98 - 01.10	40	176 B2.000
Strada (178E) 1.2	04.03 -	44	188 A4.000
Lancia Y (840A) 1.2	03.96 - 09.03	44	188 A4.000
Ypsilon (843) 1.2	10.03 - 12.11	44	188 A4.000

T179B K037 90 90 70 K010-40 K060 105

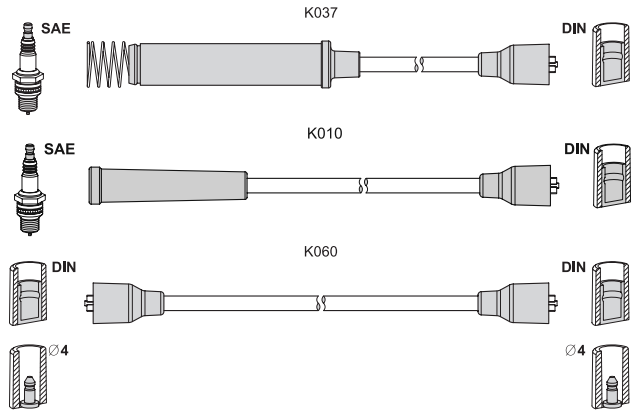

Opel/Vauxhall Omega A 1.8	09.86 - 03.94	85	18 SEH
1.8 N	09.86 - 08.87	60	18 NV
1.8 S	09.86 - 03.94	66	18 SV
2.0	09.86 - 03.94	90	20 SE
2.0 i	09.86 - 03.94	85	C 20 NE
Omega A Caravan 1.8	09.86 - 03.94	85	18 SEH
1.8 N	09.86 - 08.87	60	18 NV
1.8 S	09.86 - 03.94	66	18 SV
2.0	09.86 - 03.94	90	20 SE
2.0 i	09.86 - 03.94	85	C 20 NE

T180B K248 43 45 58 58 -

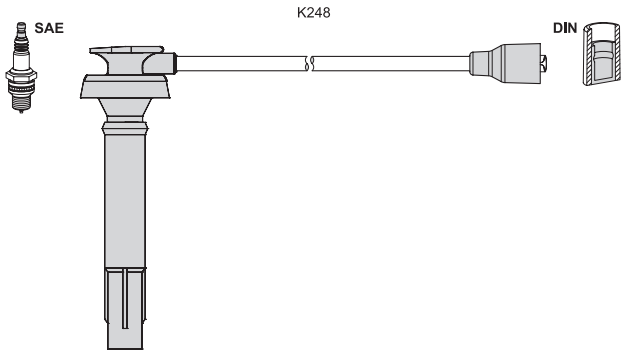

Subaru Forester (SF) 2.0	06.98 - 09.02	92	EJ20

T181B K359 53 43 33 30 -

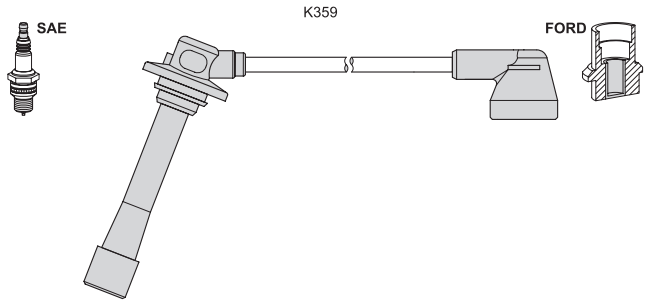

Mazda 626 V (GF) 1.8	05.97 - 12.99	66	FPY3
1.8	12.99 - 10.02	74	FP9A
2.0	05.97 - 10.02	85	FS
2.0	04.98 - 10.02	100	FS2C
626 V Hatchback 1.8	05.97 - 12.99	66	FPY3
1.8	12.99 - 10.02	74	FP
2.0	05.97 - 10.02	85	FS
2.0 H.P.	02.98 - 10.02	100	FS2C
626 V Stat. Wagon 1.8	02.98 - 01.00	66	FPY3
1.8	01.00 - 10.02	74	FP9A
2.0	02.98 - 10.02	85	FS
2.0 H.P.	02.98 - 10.02	100	FS2C

T182P K355 50 60 70 85 K158 70

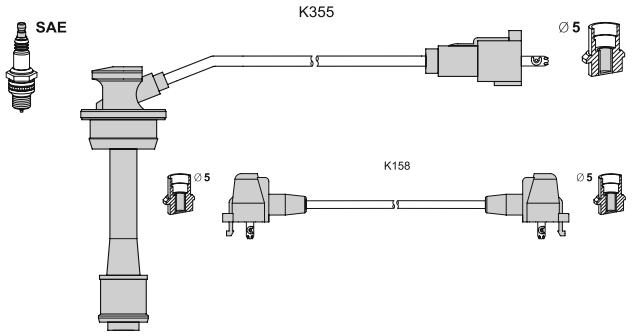

Toyota Celica (_T20_) 2.0 i 16V	04.96 - 11.99	125	3S-GE
2.0 i 16V	11.93 - 11.99	129	3S-GE
Celica Cabriolet 2.0 i 16V	11.93 - 08.99	125	3S-GE

T183G K357 125 105 110 95 85 80 80 65 -

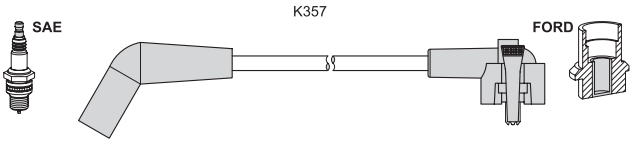

Ford Explorer 4.9 V6 Allrad	01.96 -	157

T185H K010 20 25 30 30 K060 30

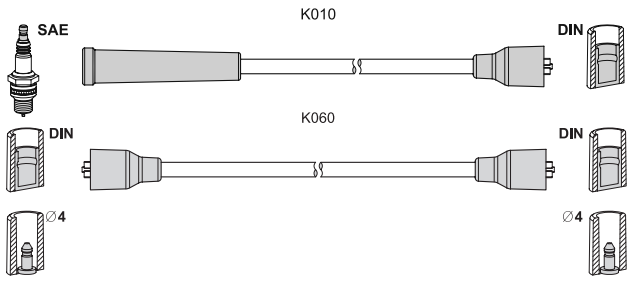

application → T641S

T186B K577 59 74 87 + + + -

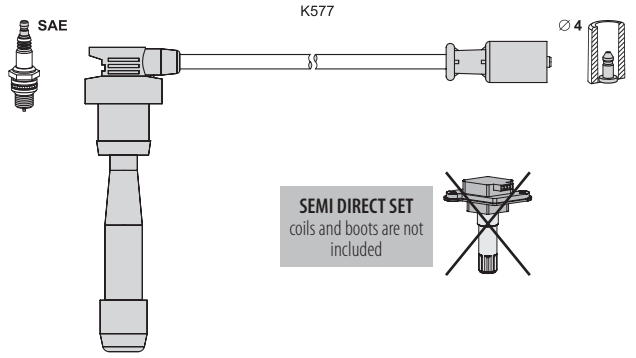

Kia Opirus (GH) 3.5	09.03 -	149	G6CU

T187B K071 65 80 85 95 K062 80

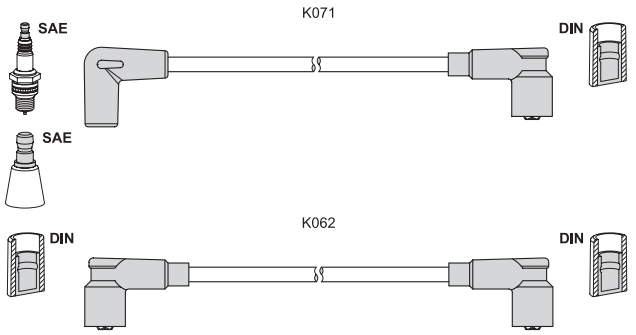

Aro 240-244 2.5	01.80 - 12.98	60	Aro L25

T188G K357 40 45 55 80 90 95 -

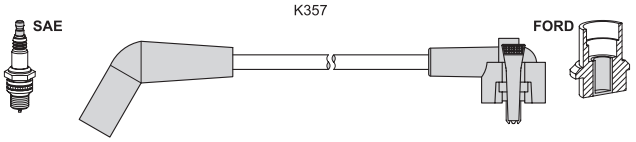

Ford Explorer 4.0 V6 Allrad	01.93 -	121	

T189B K211 14 14 K303 25 25 -

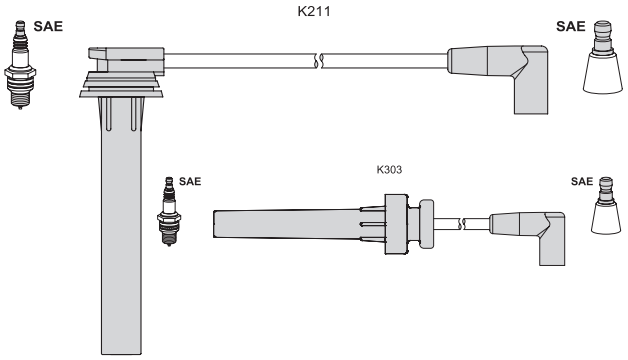

Jeep Cherokee (KJ) 2.4 4WD	09.01 - 01.08	108	ED1

T190B K477 91 91 91 91 66 66 K069 26

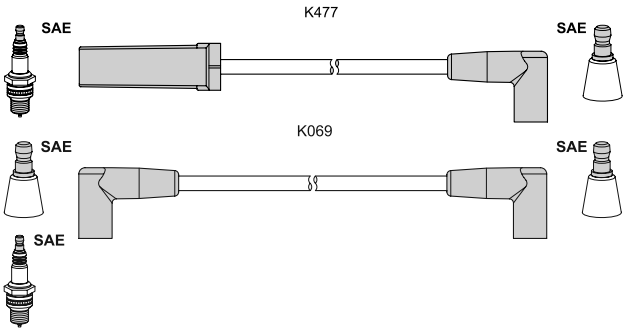

Chevrolet Blazer S10 4.3	09.88 - 08.94	115	LB4

T191B K487 26 30 45 45 K107 30 35 K069 25

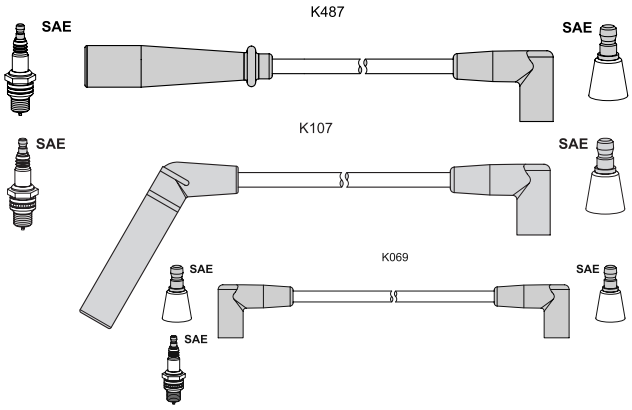

Jeep Grand Cherokee I 4.0 i	10.95 - 04.99	130	S01
4.0 i	09.91 - 04.99	132	ERH
4.0 i	09.91 - 04.99	135	MX
4.0 Laredo	10.96 - 09.98	131	ERH
Cherokee (XJ) 4.0 i	12.91 - 09.01	135	MX
4.0 i	01.88 - 09.01	136	ERH
4.0 i	01.95 - 09.01	131	ERH
4.0 i	07.98 - 09.01	127	ERH
4.0 i	02.99 - 09.01	135	MX
Wrangler I (YJ,SJ) 4.0	12.91 - 08.96	131	ERH
Wrangler II (TJ) 4.0	08.96 - 04.07	130	S01
4.0	06.98 - 04.07	124	

T 192B ▶

T192B K356 71 107 91 115 106 121 -

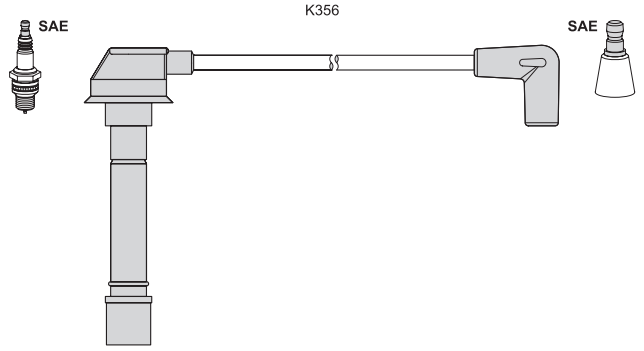

Chrysler Concorde 3.5 LX	10.92 - 09.97	155	EGE
Vision 3.5 TSi	09.93 - 12.97	155	F00/F01

T193G K373 19 39 43 58 79 87 -

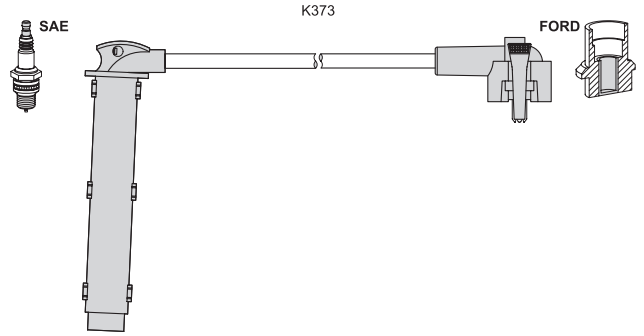

Ford Scorpio II 2.9 i 24V	10.94 - 08.98	152	BOB
Scorpio II Combi 2.9 i 24V	10.94 - 08.98	152	BOB

T194H K011 30 40 50 40 K065 30
T194S K011 30 40 50 40 K065 30

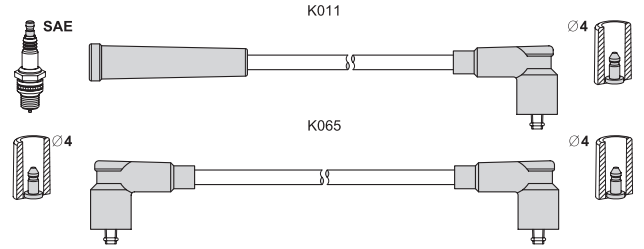

Skoda Felicia I (6U1) 1.3 carb	10.94 - 03.98	43	AMJ/135 L
Felicia I Combi 1.3 carb	08.95 - 03.98	43	AMJ/135 L

T195H K011 25 35 40 50 K065 30

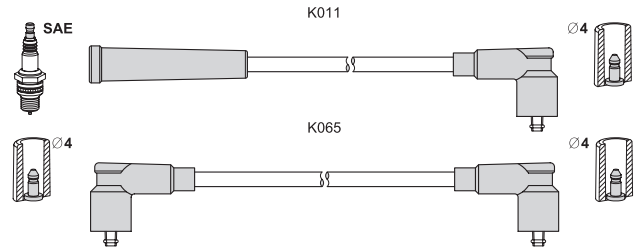

application → T372S

T196B K335 40 50 60 70 K324 70

Volvo 340-360 (343, 345) 1.7	08.85 - 07.91	59	B 17 2 K
340-360 Sedan (344) 1.7	08.85 - 07.91	59	B 17 2 K

T198B K169 55 45 35 35 -

Daewoo Nubira Sedan 2.0	06.99 - 07.03	81	C20SED

T199B K328 40 60 70 70 80 90 K300 42

Peugeot 505 2.8 GTI V6	06.86 - 12.93	105	154X (ZN3J)
Volvo 760 (704, 764) 2.8	05.86 - 08.91	105	B 280 F
2.8	08.86 - 07.90	108	B 280 F
760 Combi (704, 765) 2.8	05.86 - 08.91	105	B 280 F
780 2.9	08.86 - 07.87	115	B 280 E
2.9	08.87 - 07.90	108	B 280 F

T202B K024 49 50 60 68 70 80 80 80 K069 90

Jeep Grand Cherokee I (ZJ) 5.2	10.96 - 09.98	164	ELF
5.2	10.95 - 04.99	156	Y01
5.2 4WD	10.96 - 09.98	164	ELF
5.2 i	01.92 - 04.99	155	ELF
5.2 i	09.92 - 04.99	158	Y
5.2 4x4 Limited	10.96 - 09.98	136	ELF
5.9 i	08.97 - 04.99	177	

T204B K010 60 60 70 80 K061 60

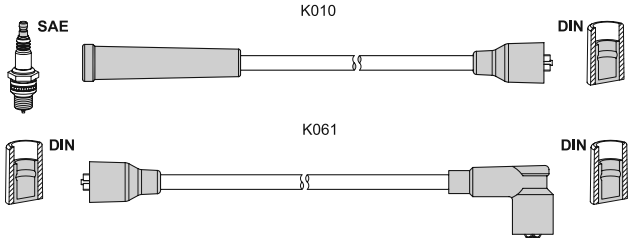

Alfa Romeo Giulietta (116) 1.3	10.77 - 06.83	66	AR 01644
1.6	10.77 - 04.85	79	AR 01600
1.8	04.79 - 04.85	90	AR 01678
2.0	06.80 - 04.85	96	AR 11671/AR 01655

T205B K361 78 93 103 106 -

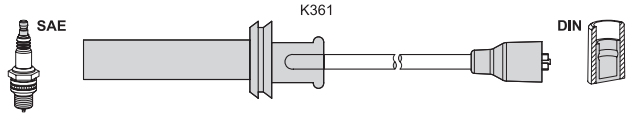

Alfa Romeo 155 2.0 16V Turbo	01.92 - 12.97	137	AR 67203
2.0 16V Turbo Q4	01.92 - 12.97	140	AR 67203

T206C K085 95 90 80 65 K404 53 alternative T046B

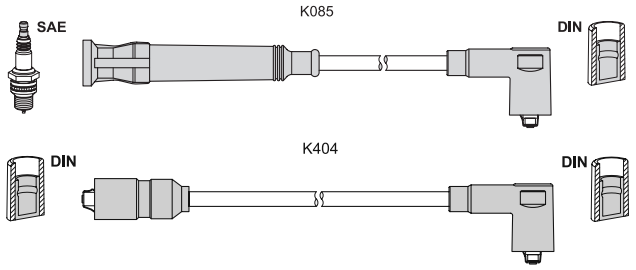

Alfa Romeo 33 1.7 16V	01.90 - 09.94	95	AR 30747
1.7 16V	01.90 - 03.92	97	AR 30747
1.7 16V 4x4	01.90 - 09.94	95	AR 30747
1.7 16V 4x4	01.90 - 09.94	97	AR 30747
33 Sport Wagon 1.7 16V	01.90 - 09.94	95	AR 30747
1.7 16V	01.90 - 09.94	97	AR 30747
1.7 16V 4x4	01.90 - 09.94	95	AR 30747
1.7 16V 4x4	01.90 - 03.92	97	AR 30747

T207B K026 40 50 50 60 K072 40

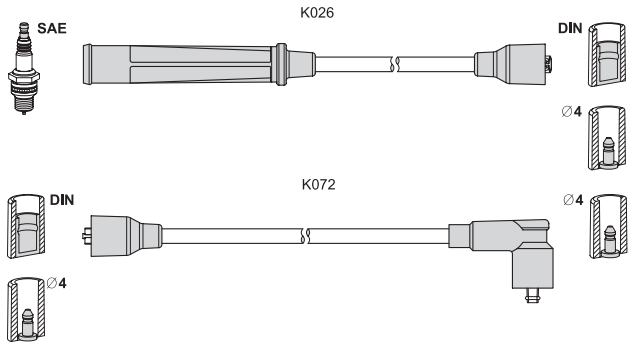

application → T701C (original)

T208B K028 90 80 70 60 60 K061 40

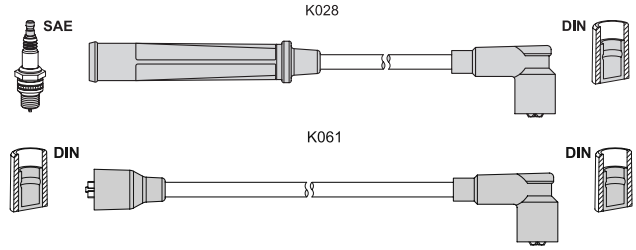

Audi 80 (81, 85, B2) 1.9 CD-5S	09.81 - 07.83	85	WN
2.0	10.83 - 09.84	85	HP
2.0 quattro	10.83 - 09.84	85	JS
2.2	10.80 - 07.83	85	WE
2.2 quattro	08.82 - 07.84	96	KL
2.2 quattro	08.82 - 07.84	100	KK
100 (44, 44Q, C3) 2.1	08.82 - 07.84	100	WC
100 Avant 2.1	08.82 - 07.84	100	WC
Coupe (81, 85) 1.9	08.80 - 07.83	85	WN
2.1 GT	01.81 - 07.83	79	WE
2.1 GT	09.82 - 08.84	96	KE/KL

T209P K366 50 57 70 K158 42

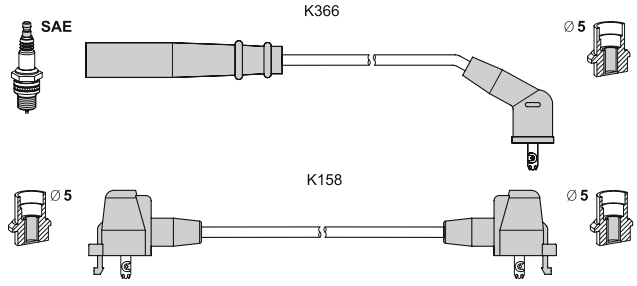

Daihatsu Cuore II 0.8	11.89 - 12.90	29	ED 10
0.8	09.85 - 06.90	32	ED 10
0.8 4WD	09.86 - 10.88	32	ED 10
Cuore III (L201) 0.8	10.90 - 12.94	30	ED10K
Cuore IV (L501) 0.8	01.95 - 11.96	32	ED20
Move (L6, L9) 0.8	10.96 -	31	ED 20

T210C K469 100 75 85 K470 72 58 50 K100 30

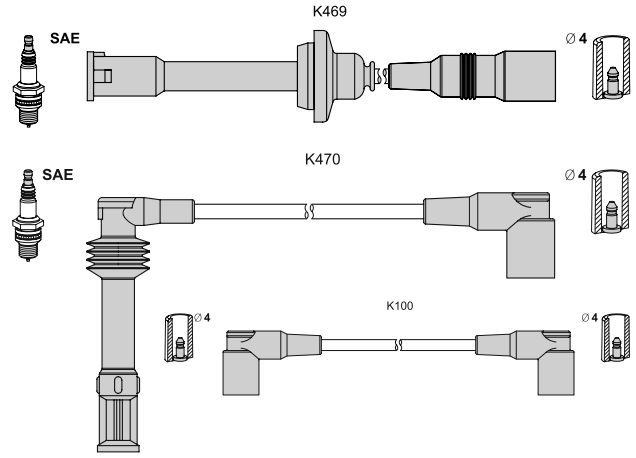

Alfa Romeo GTV 2.0 V6 Turbo	06.95 - 09.98	148	AR 16202
Spider 2.0 V6 Turbo	05.98 - 04.05	148	AR 16202

T 211C ▶

T211C K261 105 93 97 K480 32 48 60 -

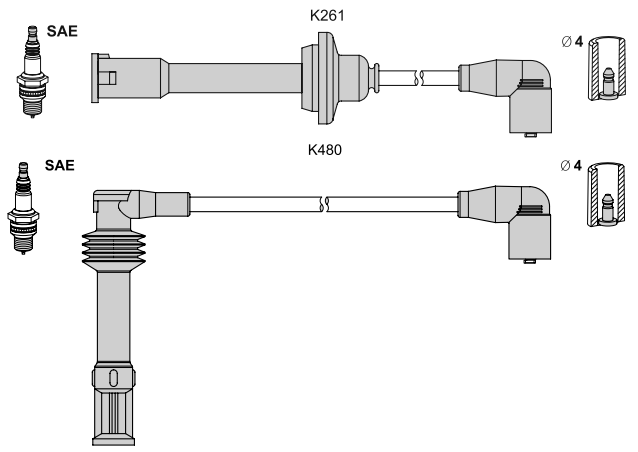

Alfa Romeo Spider 3.0 V6	06.95 - 04.05	141	AR 16101
3.0 V6 24V	01.99 - 10.00	162	AR 16102

T215B K024 50 60 80 80 K070 70

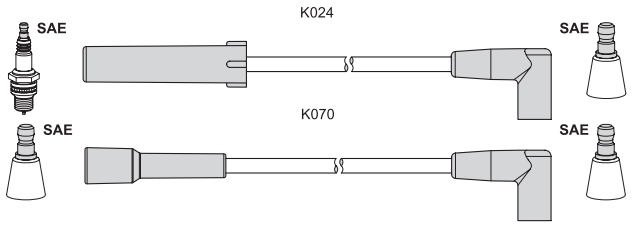

Citroen BX 19 (XB-_) 1.9 E	06.88 - 02.93	80	DDZ (XU9M)
1.9 GTi	07.86 - 02.93	90	D6A (XU9J2)
BX 19 Break (XB-_) 1.9	06.88 - 04.90	80	DDZ (XU9M)

T216B K498 45 61 67 93 101 106 K500 40

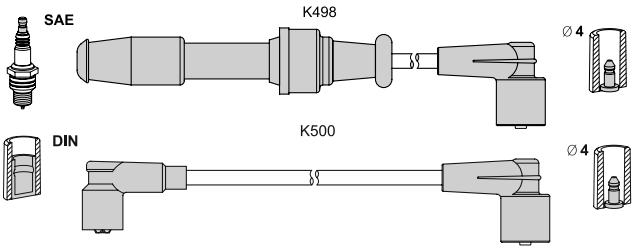

Citroen XM (Y3) 3.0 V6 24V	07.90 - 06.94	147	UKZ / SKZ
XM (Y4) 3.0 V6 24V	05.94 - 10.00	147	UKZ / SKZ
Peugeot 605 (6B) 3.0 SV 24	08.89 - 09.99	147	UKZ (ZPJ4/Z)

T217B K507 40 42 60 K506 70 K324 70

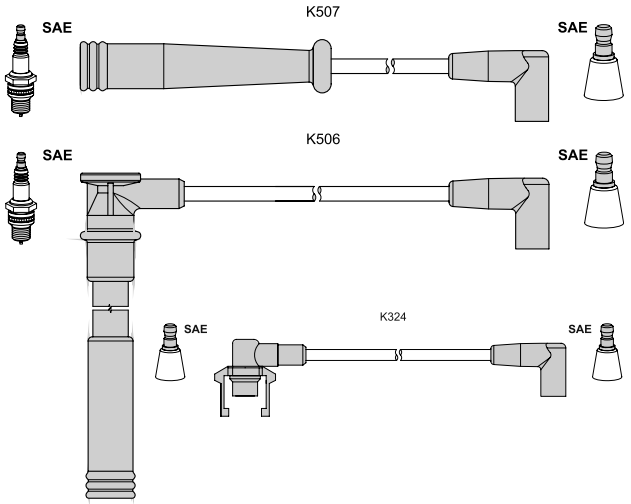

Renault Safrane I (B54_) 2.2	04.92 - 07.96	79	J7T 762
2.2	04.92 - 07.96	101	J7T 760/J7T 761

T218B K042 60 60 80 80 K061 40

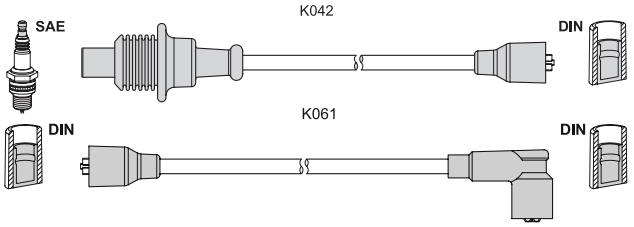

Citroen Visa 1.6 GTi	01.85 - 06.86	76	180A (XU5J)
1.6 GTi	06.86 - 03.91	83	B6D

T220B K187 30 40 50 60 K061 70

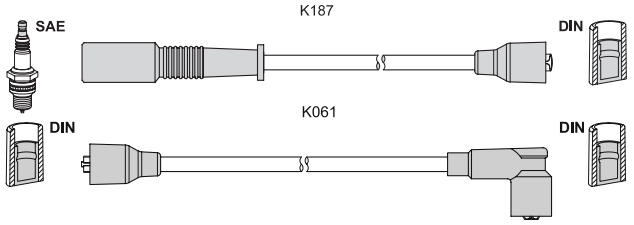

Fiat Uno 55 (146A/E) 1.1	01.83 - 08.89	40	138 B.000
Uno 60 (146A/E) 1.1	05.85 - 08.89	43	146 A4.048
Uno 70 (146A/E) 1.3	05.85 - 08.89	48	149 A7.000
1.3	01.83 - 04.85	50	138 B2.000

T221B K235 63 57 40 31 K062 60

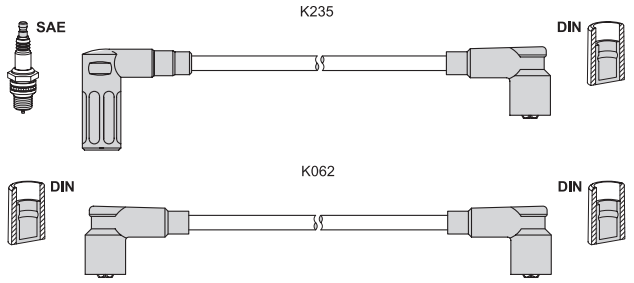

Fiat Elba (146_) 1.5	01.92 - 12.96	55	149 C1.000
Fiorino (147) 1.5	01.88 - 08.93	55	149 C1.000
Fiorino Pick up (146) 1.6	01.94 - 05.01	55	146 D6.000/_ C6.000
Fiorino 70 Van 1.4 i.e.	05.94 - 10.96	49	146 C5.000/_ D5.000

< T221B

Fiat Fiorino 75 Van 1.5 i.e.	05.88 - 12.93	55	149 C1.000
1.6 i.e.	10.93 - 05.01	55	146 D6.000/_ C6.000

T222B K010 50 50 60 70 K061 60

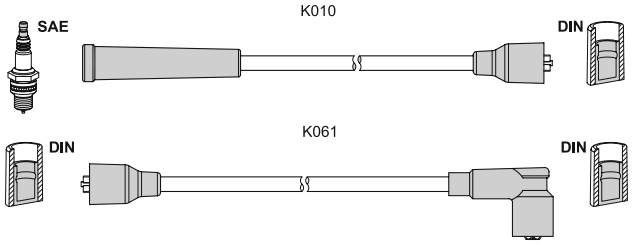

Fiat Croma (154) 1600 1.6	12.85 - 12.90	61	154 A.048
Croma (154) 2000 2.0 CHT	01.91 - 09.92	74	
2.0 CHT	12.85 - 02.89	66	154 A1.000
2.0 i.e.	03.86 - 09.90	83	834 B.048
2.0 i.e.	03.87 - 09.92	88	834 B.000/154 C3._
2.0 i.e.	10.87 - 08.96	85	154 C3.046/834 B._
2.0 i.e.	12.85 - 06.90	114	154 A2.000
2.0 i.e. Turbo	11.86 - 11.88	111	834 C.146
2.0 i.e. Turbo	06.87 - 08.96	110	154 C4.046/834 C._
Lancia Delta I 1.6 GT i.e.	08.86 - 08.88	80	831 B7.000
Thema 2.0 i.e. Turbo	07.86 - 05.90	110	834 C.146
Thema S.W. 2.0 Turbo	01.89 - 03.92	110	834 C.146

T223G K499 58 66 78 90 K062 67

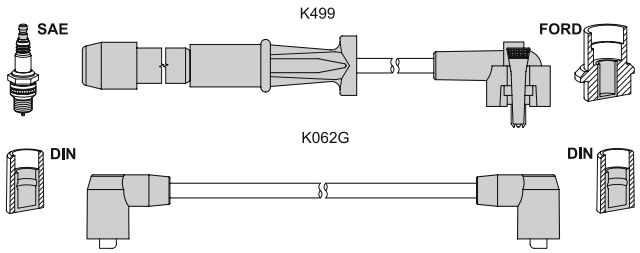

Ford Scorpio II 2.0 i	10.94 - 08.98	85	NSD
2.0 i 16V	10.94 - 08.98	100	N3A
2.3 i 16V	06.96 - 08.98	108	Y5A
Scorpio II Combi 2.0 i	10.94 - 08.98	85	NSD
2.0 i 16V	10.94 - 08.98	100	N3A
2.3 i 16V	06.96 - 08.98	108	Y5A
Sierra 2.0 i DOHC	12.91 - 02.93	85	N9E
Sierra Hatch. 2.0 i DOHC	12.91 - 02.93	85	N9E
Sierra Combi 2.0 i DOHC	12.91 - 02.93	85	N9E
Transit Bus (E_ _) 2.0	09.95 - 03.00	84	NSF/NSG
2.0 CNG	06.94 - 03.00	84	NSH
Transit Flatbed (E_ _) 2.0	08.94 - 03.00	84	NSF/NSG
Transit Tourneo 2.0	11.94 - 12.00	84	NSH
Transit Van (E_ _) 2.0	06.94 - 03.00	84	NSF/NSG

T224G K071 50 50 60 60 70 70 K061 70

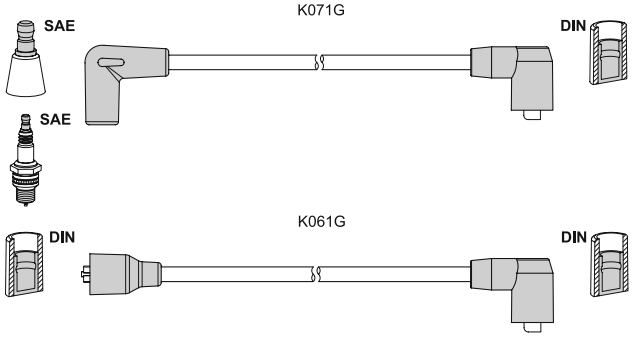

< T224G

Ford Granada (GU) 2.0	08.77 - 08.85	66	NYP
2.3	08.77 - 06.79	79	YYH
2.8	08.77 - 08.85	99	PYA
2.8 i	10.82 - 08.85	110	PRC
Granada Combi (GNU) 2.0	08.77 - 06.85	66	NYP
2.3	08.77 - 06.79	79	YYH
2.8	08.77 - 08.85	99	PYA
2.8 i	10.82 - 08.85	110	PRC

T225G K010 60 70 70 80 K061 60

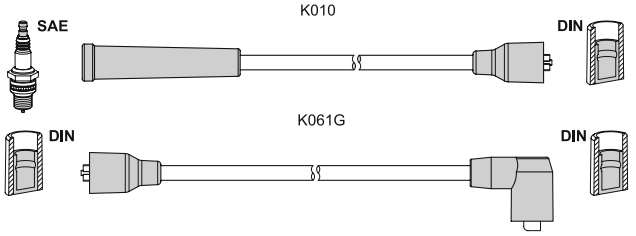

Ford Fiesta II (FBD) 1.3	09.83 - 09.89	51	JPC
1.3	09.83 - 01.87	51	JPC

T226G K465 85 73 54 64 34 40 -

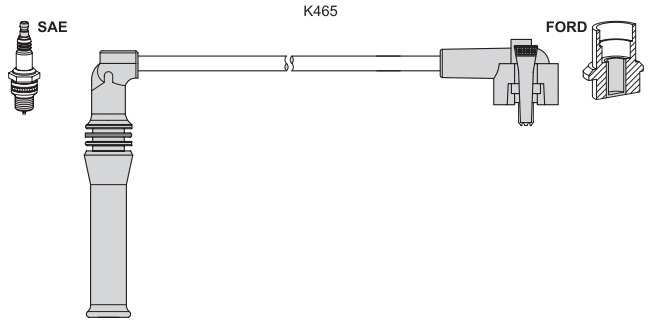

Ford Scorpio I 2.9 i 24V	04.91 - 09.94	143	BOA
Scorpio I Combi 2.9 i 24V	08.93 - 09.94	143	BOA
Scorpio I Sedan 2.9 i 24V	04.91 - 09.94	143	BOA

T227G K050 20 30 40 45 -

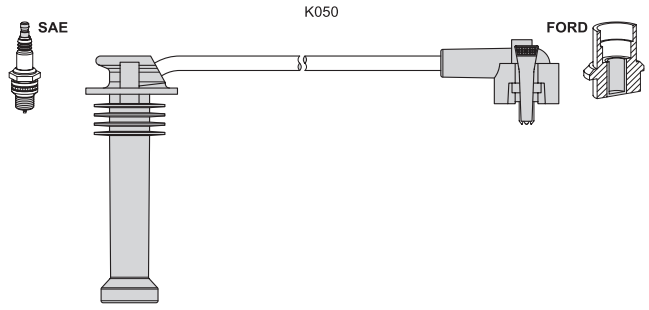

Ford Escort Classic 1.6 16V	10.98 - 07.00	66	L1E
Escort Clas. Turnier 1.6 16V	02.99 - 07.00	66	L1E
Escort V 1.8 16V XR3i	02.92 - 12.92	77	RDA
1.8 16V XR3i	02.92 - 12.92	96	RQB
Escort V Cab. 1.8 16V XR3i	02.92 - 12.92	77	RDA
1.8 16V XR3i	02.92 - 12.92	96	RQB
Escort V Combi 1.8 16V	02.92 - 12.92	77	RDA
Escort VI (GAL) 1.6 i 16V	09.92 - 01.95	66	L1E
1.6 i 16V	01.94 - 01.95	65	L1H
1.8 i 16V	09.92 - 01.95	77	RDA
1.8 XR3i 16V 4x4	08.93 - 01.95	77	RDA
1.8 XR3i 16V 4x4	08.93 - 01.95	96	RQB
Escort VI Cab. 1.6 16V XR3i	12.92 - 01.95	66	L1E
1.6 i 16V	02.94 - 01.95	65	L1H
1.8 16V XR3i	12.92 - 01.95	77	RDA

T 227G ▶

< T227G			
Ford Escort VI Cab. 1.8 16V XR3i	12.92 - 01.95	96	RQB
Escort VI Combi 1.6 i 16V	09.92 - 01.95	66	L1E
1.6 i 16V	01.94 - 01.95	65	L1H
1.8 i 16V	02.93 - 01.95	96	RQB
1.8 i 16V	01.93 - 01.95	77	RDA
Escort VI Sedan 1.6 i 16V	01.94 - 01.95	65	L1H
1.6 i 16V	08.93 - 01.95	66	L1E/L1K
1.8 i 16V	08.93 - 01.95	77	RDA
Escort VII 1.6 16V	01.95 - 10.98	66	L1E
1.6 16V 4x4	01.95 - 10.98	66	L1E
1.6 i 16V	01.95 - 08.95	65	L1H
1.8 16V	01.95 - 08.95	77	RDA
1.8 16V	01.95 - 10.98	85	RKC
Escort VII Cab. 1.6 16V XR3i	02.95 - 12.96	65	L1H
1.6 16V XR3i	02.95 - 09.99	66	L1E
1.8 16V XR3i	02.95 - 08.98	77	RDA
1.8 16V XR3i	10.95 - 08.98	85	RKC
1.8 16V XR3i	02.95 - 08.00	96	RQB
Escort VII Combi 1.6 16V	01.95 - 02.99	66	L1E
1.6 i 16V	01.95 - 08.95	65	L1H
1.8 16V	01.95 - 08.95	77	RDA
1.8 16V	01.95 - 02.99	85	RKC
Escort VII Sedan 1.6 i 16V	01.95 - 08.95	65	L1H
1.6 i 16V	01.95 - 02.99	66	L1E/L1K
1.8 16V	01.95 - 08.95	77	RDA
1.8 16V	01.95 - 02.99	85	RKC
Fiesta III (GFJ) 1.6 i 16V	01.94 - 12.95	65	L1G
1.8 16V	02.92 - 12.95	77	RDB
1.8 XR2i 16V	02.92 - 12.95	96	RQC
Fiesta IV 1.4 i 16V	04.96 - 04.98	66	FHE/FHA
Fiesta Van (J5_, J3_) 1.4 i	04.96 - 10.99	66	FHA
Mondeo I (GBP) 1.6 i 16V	02.93 - 08.96	66	L1F
1.6 i 16V	07.94 - 08.96	65	L1J
1.8 i 16V	02.93 - 08.96	85	RKA
1.8 i 16V	07.94 - 08.96	82	RKB
1.8 i 16V 4x4	02.93 - 08.96	85	RKA
2.0 i 16V	02.93 - 08.96	100	NGA
2.0 i 16V	12.94 - 08.96	97	NGA
2.0 i 16V 4x4	12.94 - 08.96	97	NGA
2.0 i 16V 4x4	04.93 - 08.96	100	NGA
Mondeo I Combi 1.6 i 16V	04.93 - 08.96	66	L1F
1.6 i 16V	07.94 - 08.96	65	L1J
1.8 i 16V	04.93 - 08.96	85	RKA
1.8 i 16V	07.94 - 08.96	82	RKB
1.8 i 16V 4x4	04.93 - 08.96	85	RKA
2.0 i 16V	01.93 - 08.96	97	NGA
2.0 i 16V	04.93 - 08.96	100	NGA
2.0 i 16V 4x4	12.94 - 08.96	97	NGA
2.0 i 16V 4x4	04.93 - 08.96	100	NGA
Mondeo I Sedan 1.6 i 16V	02.93 - 08.96	66	L1F
1.6 i 16V	07.94 - 08.96	65	L1J
1.8 4x4	02.93 - 08.96	85	RKA
1.8 i 16V	02.93 - 08.96	85	RKA
1.8 i 16V	01.94 - 08.96	82	RKB
2.0 i 16V	02.93 - 08.96	100	NGA
2.0 i 16V 4x4	12.94 - 08.96	97	NGA
Mondeo II (BAP) 1.6 i	09.96 - 08.98	66	L1J
1.8 i	09.96 - 08.98	85	RKK/_J/_B/_F/RKH
2.0 i	09.96 - 08.98	96	NGA/_B/_D/_C
Mondeo II Combi 1.6 i	09.96 - 08.98	66	L1J
1.8 i	09.96 - 08.98	85	RKK/_J/_B/_F/RKH
2.0 i	09.96 - 08.98	96	NGA/_B/_D/_C
Mondeo II Sedan 1.6 i	09.96 - 08.98	66	L1J
1.8 i	09.96 - 08.98	85	RKK/_J/_B/_F/RKH
2.0 i	09.96 - 08.98	96	NGA/_B/_D/_C
Orion III (GAL) 1.6 i 16V	07.92 - 12.93	66	L1E/L1K

< T227G			
Ford Orion III (GAL) 1.8 i 16V	02.92 - 12.93	77	RDA
1.8 i 16V	01.92 - 12.93	96	RQB

T228G K048 50 55 65 75 K062 70

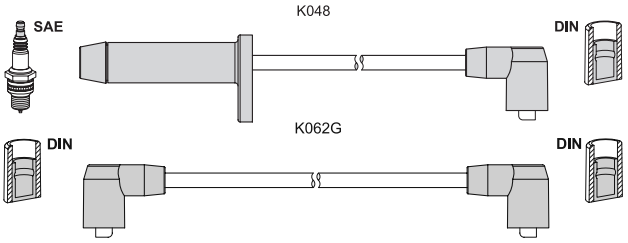

Ford Scorpio I 2.0 i	04.85 - 02.92	85	NRI/NRA
2.0 i	02.92 - 09.94	85	NRI/NRA
2.0 i	05.89 - 09.94	88	N9D
Scorpio I Combi 2.0 i	09.91 - 09.94	85	N9F
2.0 i	09.91 - 09.94	88	N9D
Scorpio I Sedan 2.0 i	02.92 - 09.94	85	N9F
2.0 i	05.89 - 09.94	88	N9D
Sierra (GBG, GB4) 2.0	01.87 - 02.93	77	N8C/NES
2.0 4x4	01.90 - 02.93	92	N9C
2.0 i	01.90 - 02.93	92	N9C
Sierra Hatchback 2.0	01.87 - 02.93	77	N8C/NES
2.0 i	06.89 - 02.93	88	N9C
2.0 i	06.89 - 02.93	92	N9B
Sierra Combi (BNG) 2.0	01.87 - 02.93	77	N8C/NES
2.0 4x4	02.90 - 02.93	88	N9C
2.0 4x4	05.89 - 02.93	92	N9C
2.0 i	05.89 - 02.93	88	N9C
2.0 i	05.89 - 02.93	92	N9C

T229B K012 50 50 70 70 K061 40

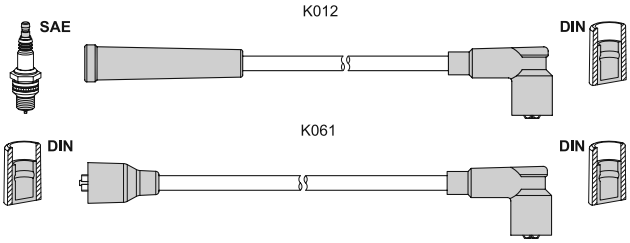

Honda Accord I 1.6 L/EX	01.78 - 09.83	59	EL
Accord II 1.6 EX	09.83 - 10.85	65	EZ
1.8 EX	09.83 - 10.85	74	ET1
Accord III 2.0 EX	11.85 - 12.89	76	A20A1
2.0 EX	11.85 - 05.89	78	A20A2
2.0 EXi	01.86 - 12.89	85	A20A3
2.0 EXi	11.85 - 12.87	90	A20A4

T230B K125 60 53 42 33 -

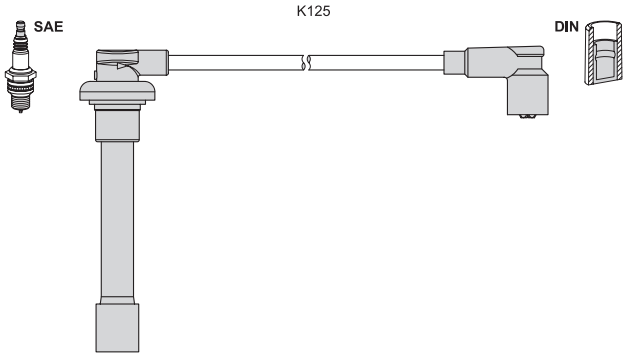

Honda Civic V Coupe 1.6 i Vtec	01.94 - 03.96	92	D16Y6

< T230B

Honda Civic V Hatchback 1.5 i 16V	10.91 - 11.95	69	D15Z1
1.6 16V	10.91 - 11.95	92	D16Z6
Civic V Sedan 1.6 16V Vtec	10.91 - 11.95	92	D16Z6/D16Z7
Civic VI Fastb. 1.5 i Vtec-E	09.94 - 01.97	66	D15Z3
1.6 i Vtec	09.94 - 01.97	93	D16Y2

T231B K010 50 60 80 80 K061 50

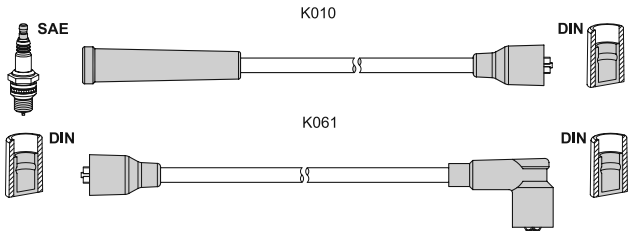

Honda Civic III Hatch. 1.2	01.84 - 10.87	40	ZA2/D12B1
1.3	10.83 - 10.87	52	EV2
CRX I (AF, AS) 1.3	10.83 - 10.87	52	EV2

T232B K125 50 55 65 72 -

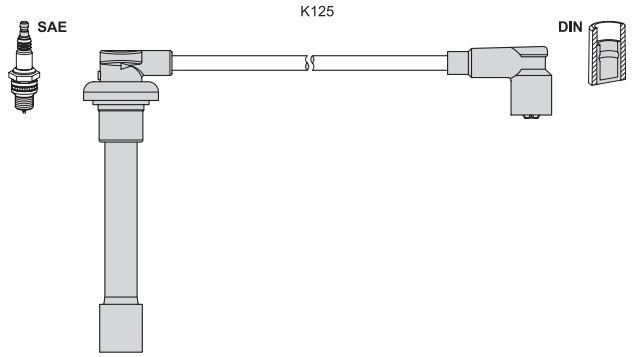

Honda Accord V Aerod. 2.2 i ES	09.93 - 02.98	110	F22B5
Accord V Coupe 2.2 i ES	09.93 - 02.98	110	F22B5
Accord VII Coupe 2.0 i 16V	02.98 - 06.03	108	F20B7/F20B5
Shuttle (RA) 2.3 16V	10.97 - 06.04	110	F23A7
2.3 16V 4x4	10.97 - 06.02	110	F23A

T236B K391 39 33 25 15 -

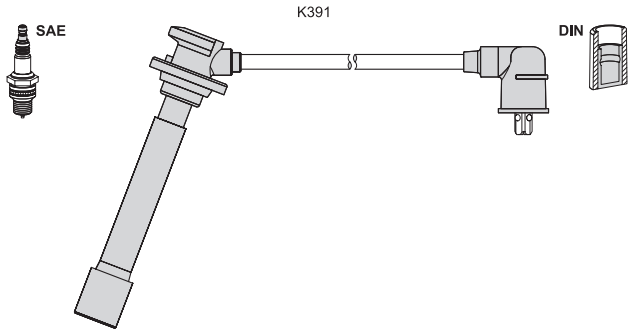

Kia Carens II (FJ) 1.6	07.02 -	77	GA6D
Rio (DC_) 1.5 16V	09.00 - 02.05	72	A5D
Rio Combi (DC) 1.5 16V	08.00 - 02.05	72	A5D
1.5 16V	09.02 - 02.05	71	A5D
Shuma II (FB) 1.6	05.01 - 08.04	75	GA6D
Shuma II Sedan (FB) 1.6	05.01 - 05.04	75	GA6D
Spectra RUS 1.6	05.08 -	75	S6D (DOHC)

T237B K394 38 K395 78 50 93 62 71 -

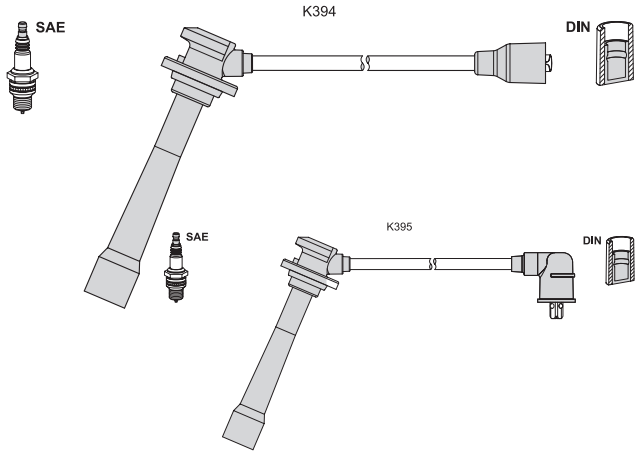

Kia Carnival (UP) 2.5 V6	08.99 - 10.01	121	KRV6
Carnival II 2.5 V6	10.01 -	110	K5

T238P K225 65 80 85 + + + -

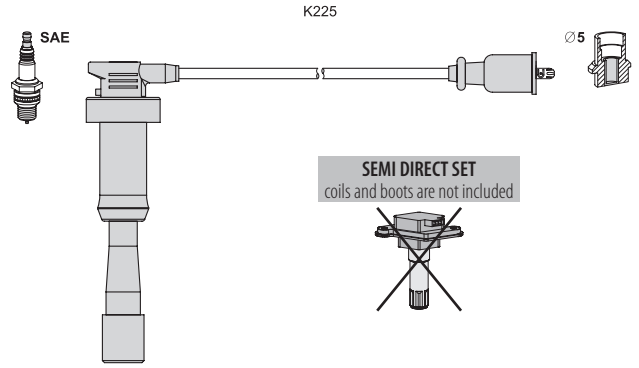

Hyundai Equus/Centennial 3.5	10.99 - 03.09	155	G6CU
Terracan 3.5i V6 4WD	12.01 - 12.06	143	G6CU
XG 30/300 3.0	12.98 -	138	G6CT-G
XG 300 3.0	09.99 -	145	G6CT
XG 350 3.5	04.03 -	145	G6CU
Kia Carnival II 3.5	07.02 -	143	G6CU

T239B K028 40 50 60 70 K061 60

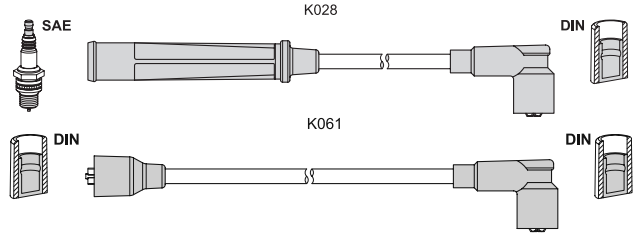

Lancia Delta I 1.6 GT	11.82 - 04.86	77	831 A4.000
1.6 GT i.e.	05.87 - 08.92	66	149 C2.000
Thema (834) 2.0 i.e.	11.84 - 09.88	88	834 B.000
2.0 i.e. Turbo	11.84 - 12.87	122	834 C.000

T 240B ▶

T240B K230 46 53 60 70 K430 57

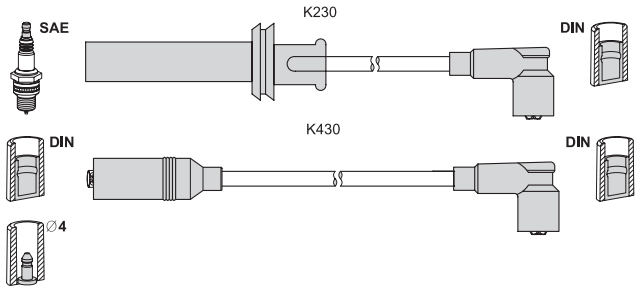

Lancia Delta I 2.0 HF Integrale	12.86 - 12.92	130	831 C5.046
2.0 16V HF Integrale	03.89 - 09.91	144	831 D5.000

T241B K010 40 50 60 70 K061 50

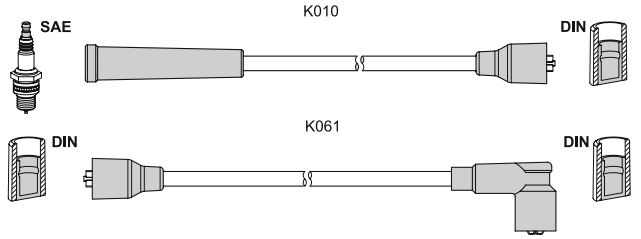

Lancia Prisma 1.6 i.e.	05.86 - 12.89	80	831 B7.000
1.6 i.e. Super	05.87 - 12.89	66	149 C2.000
2.0 i.e. Allrad	04.86 - 12.89	85	831 B4.000

T242B K494 62 56 40 30 -

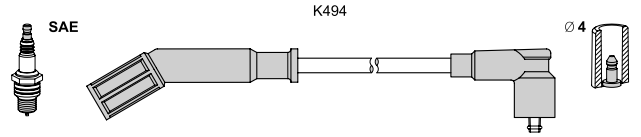

Lancia Y10 (156) 1.1 Avenue	01.95 - 12.95	40	176 B2.000
1.1 Avenue Allrad	01.95 - 12.95	40	176 B2.000
1.1 i.e. Fire	10.92 - 09.95	37	156 C.046
1.1 i.e. Fire Allrad	09.92 - 12.95	37	156 C.046

T244B K010 40 40 40 30 K061 80

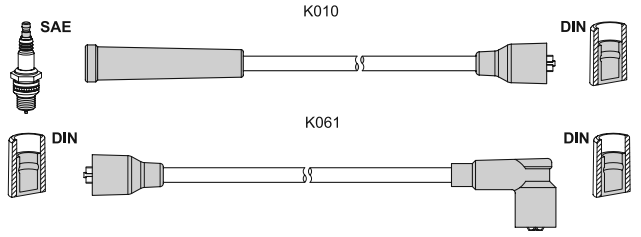

Lancia Beta H.P.E. 1.6	08.80 - 09.84	74	828 B.000
2.0 i.e.	05.81 - 09.84	90	828 B4.000
Y10 (156) 1.0 Fire	03.85 - 06.89	33	156 A 2.000
1.0 Fire cat	10.87 - 02.92	33	156 A2.246
1.0 Fire Allrad	12.87 - 02.92	33	156 A2.246
1.0 Turbo	03.85 - 02.89	62	156 A 1.000

T245B K615 45 34 23 21 -

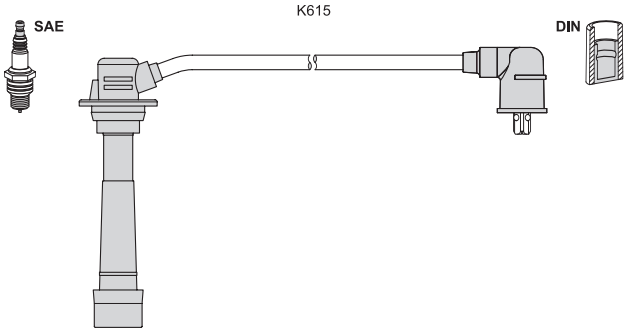

Mazda 323 F VI (BJ) 1.9 16V	09.98 - 01.01	84	FP55
323 S VI (BJ) 1.9 16V	09.98 - 05.04	84	FP55

T246B K028 30 50 50 80 K061 50

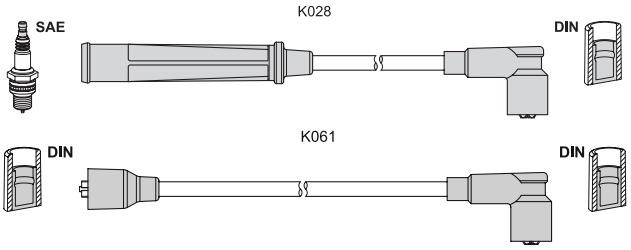

Mazda 626 II (GC) 1.6	11.82 - 09.87	59	F6
2.0	03.83 - 09.87	74	FE
2.0	01.86 - 09.87	88	FE
929 II (HB) 2.0	03.84 - 07.87	74	FE
2.0 i GLX	10.84 - 07.87	88	FE
929 II Coupe (HB) 2.0	03.84 - 07.87	74	FE
2.0 i Turbo	10.84 - 07.87	88	FET/FE

T247P K375 32 38 + + -

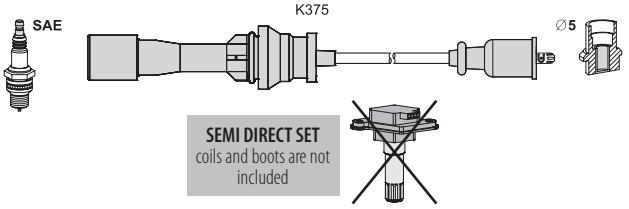

Mazda 323 F VI (BJ) 1.5 16V	09.98 - 01.01	65	ZL06/ZL05
1.6	01.01 - 05.04	70	ZM
1.6	01.01 - 05.04	72	ZM
323 S VI (BJ) 1.5 16V	09.98 - 01.01	65	ZL06/ZL05
1.6	01.01 - 05.04	70	ZM
1.6	01.01 - 05.04	72	ZM

T248P K392 60 25 + + -

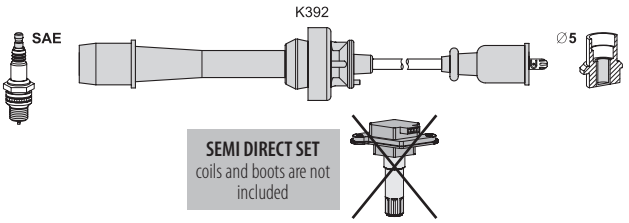

Mazda 323 F VI (BJ) 2.0	01.01 - 05.04	96	FS7G/FS7E
323 S VI (BJ) 2.0	01.01 - 05.04	96	FS7G/FS7E
MPV II (LW) 2.0	09.99 - 08.00	90	FS-DS
2.0	08.00 - 07.02	88	FS
Premacy (CP) 1.8	07.99 - 03.05	74	FP

< T248P

Mazda Premacy (CP) 1.9	07.99 - 03.05	84	FP
2.0	11.01 - 03.05	96	FS7G/FS7E

T250B K031 55 65 65 75 K077 35

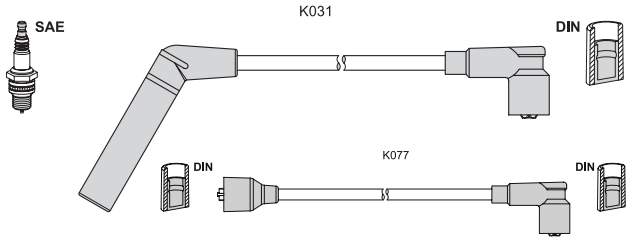

Mitsubishi Colt II 1.2 EL,GL	02.84 - 09.86	40	4G16
1.2 EL,GL	09.86 - 04.88	44	4G16
1.5 GLX	09.85 - 04.88	51	G15B
1.5 GLX	09.84 - 04.88	55	4G15
Colt III (C5_A) 1.3	04.88 - 05.92	51	4G13 (8V)
1.3 12V	04.88 - 05.92	55	4G13 (12V)
1.3 GL	04.88 - 12.90	44	4G13 (8V)
1.5 cat	07.90 - 05.92	66	4G15 (12V)
1.5 GLXi	04.88 - 05.92	62	4G15
Lancer III 1.2 GL	08.86 - 04.88	44	4G16
1.2	01.84 - 10.86	40	4G16
1.5 GLX	11.83 - 04.88	55	4G15
Lancer III Stat. Wagon 1.5	09.85 - 12.87	55	4G15
1.5	09.88 - 12.90	61	4G15
1.5 12V	09.90 - 12.91	66	4G15 (12V)
Lancer IV 1.3 12V	07.90 - 07.93	44	4G13 (12V)
1.3 12V	06.92 - 05.94	55	4G13 (12V)
1.5	06.88 - 05.92	62	4G15
1.5 12V	05.89 - 05.92	66	4G15 (12V)
Lancer IV Sedan 1.3	04.88 - 05.92	44	4G13 (8V)
1.3 12V	07.90 - 06.92	55	4G13 (12V)
1.5	04.88 - 05.92	62	4G15
1.5 12V	05.89 - 05.92	66	4G15 (12V)

T251B K413 35 45 50 60 -

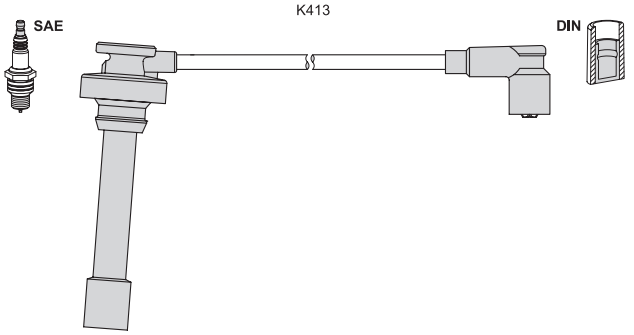

Mitsubishi Space Star 1.3 16V	06.98 - 12.04	63	4G13 (16V)
1.3 16V	12.98 - 12.04	61	4G13 (16V)
1.3 16V	09.00 - 12.04	60	4G13 (16V)

T252B K012 70 80 90 90 K061 60

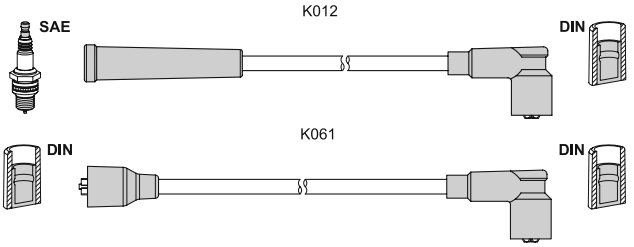

Mitsubishi Colt I 1.4 GLX,GT	05.79 - 01.84	51	4G12

< T252B

Mitsubishi Colt I 1.4 Turbo	09.81 - 01.84	77	4G12T
Colt II 1.6 Turbo Eci	02.84 - 04.88	92	4G32T/C
Eclipse I (D2_A) 1.8	12.89 - 03.94	68	4G37
Eclipse Cabriolet 1.8	12.89 - 03.94	68	4G37
Eclipse II (D3_) 2.0 GT 16V	12.95 - 04.99	157	
2.0 Turbo 4WD	12.95 - 04.99	157	
Galant IV (E3_A) 1.8	11.88 - 10.92	66	4G37
Galant IV Sedan 1.8	11.87 - 08.90	63	4G37
1.8	11.87 - 10.92	66	4G37
Lancer III St. Wag. 1.8 4WD	01.87 - 12.87	66	4G37
1.8 4WD	03.89 - 12.90	63	4G37
1.8 4WD	08.90 - 06.92	69	4G37
Lancer IV 1.6 GTi	05.88 - 05.90	91	4G61
Lancer IV Sedan 1.6 GTi	05.88 - 05.90	91	4G61
Mirage 1.5	04.86 - 01.88	52	G31B
Pajero II 2.4	04.91 - 10.99	82	4G64 (12V)
Pajero II Canvas Top 2.4	04.91 - 04.00	82	4G64 (12V)
Sapporo II (A16_A) 2.0 GSR	08.80 - 09.84	82	4G63 (SOHC 8V)
Space Wagon 1.8 4WD	10.87 - 08.88	66	4G37
1.8 GLX	01.84 - 12.88	66	4G37
Tredia (A21_) 1.8 Turbo	08.84 - 07.86	100	G62B

T253B K413 65 73 52 55 50 50 -

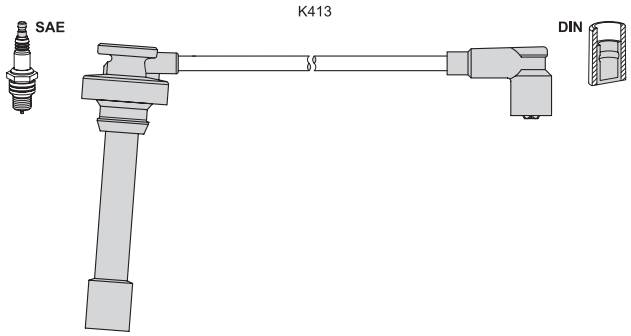

Mitsubishi Galant VI 2.5 V6 24V	09.96 - 09.00	120	6A13
2.5 V6 24V	09.00 - 10.04	118	6A13
Galant VI S. W. 2.5 V6 24V	09.96 - 09.00	120	6A13
2.5 V6 24V	09.00 - 10.03	118	6A13

T254B K028 70 90 100 110 K061 60

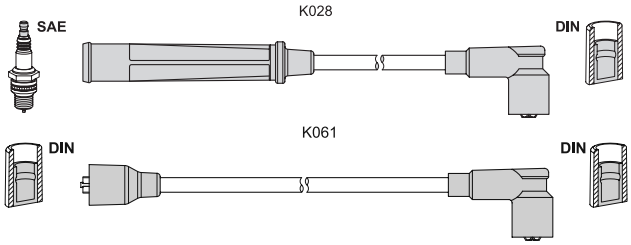

Mitsubishi L 200 (K__T) 2.0	11.86 - 08.96	75	4G63 (SOHC 8V)
2.0 4WD	11.86 - 08.96	75	4G63 (SOHC 8V)
L 300 Bus (L _ _) 1.8	03.83 - 10.86	60	4G62
1.8 4WD	08.84 - 02.87	60	4G62
2.0 4WD	11.86 - 02.87	65	4G63 (SOHC 8V)
L 300 Bus (P_ _) 2.0	11.86 -	66	4G63 (SOHC 8V)
2.0 4WD	12.86 -	65	4G63 (SOHC 8V)
2.0 4WD	11.86 -	66	4G63 (SOHC 8V)
2.4	11.90 -	82	4G64 (12V)
2.4	08.88 - 08.97	82	4G64 (8V)
2.4 4WD	11.90 -	82	4G64 (12V)
2.4 GLX 4WD	11.86 - 08.97	82	4G64 (8V)
L 300 Van 1.8	03.83 - 10.86	60	4G62
L 300 Van 2.4	11.86 - 08.97	82	4G64 (8V)/G64B

T 254B ▶

< T254B			
Mitsubishi L 300 Van 2.4 4WD	11.86 - 08.97	82	4G64 (8V)/G64B
Pajero I Canvas Top 2.6	01.83 - 11.90	76	4G54
Sapporo III (E16A) 2.4	06.87 - 08.90	91	4G64 (8V)

T255B K012 60 70 80 80 K061 60

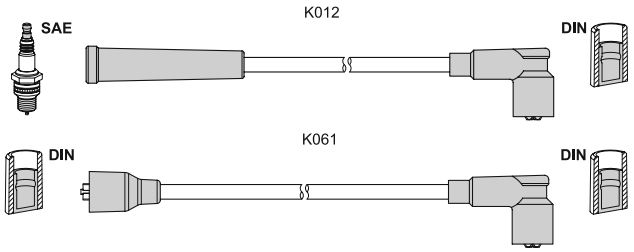

Mitsubishi Tredia 1.8 GLS	08.84 - 07.86	66	4G37

T260B K012 40 50 60 70 K061 40

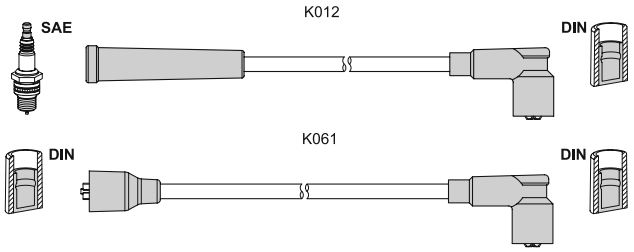

Nissan Micra (K10) 1.0	12.82 - 05.89	40	MA10S
1.0	12.82 - 12.89	37	MA10S
1.2	07.86 - 07.92	44	MA12S
1.2	07.86 - 07.92	40	MA12S

T261B K028 70 70 90 90 K061 50

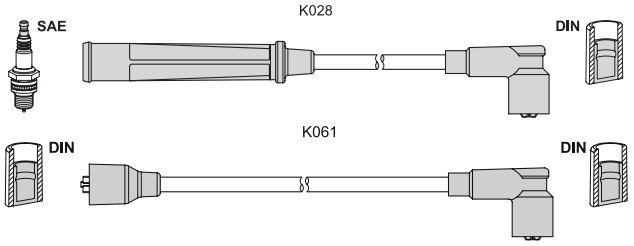

Nissan Prairie 1.5 S	01.84 - 12.87	55	E15S
1.8 SGL	07.83 - 12.85	65	CA18S
1.8 SGL	05.85 - 10.87	66	CA18S
Silvia (S12) 2.0 GP	04.84 - 09.88	107	FJ20E

T262B K028 55 60 70 80 K061 60

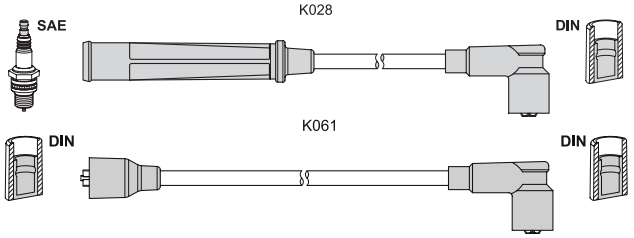

Nissan Silvia (S110) 1.8	01.79 - 05.83	68	L18E

T264B K424 26 37 55 70 K423 37 55 K439 30

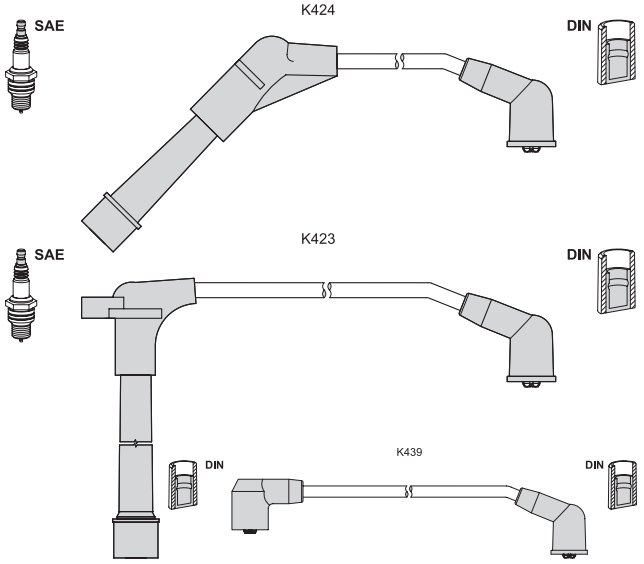

Nissan Pick Up 3.0 i V6 4WD	09.90 - 02.98	109	VG30E
Terrano I 3.0 i 4WD	01.90 - 12.95	109	VG30E

T265B K424 35 K425 65 70 68 K426 45 60 K439 30

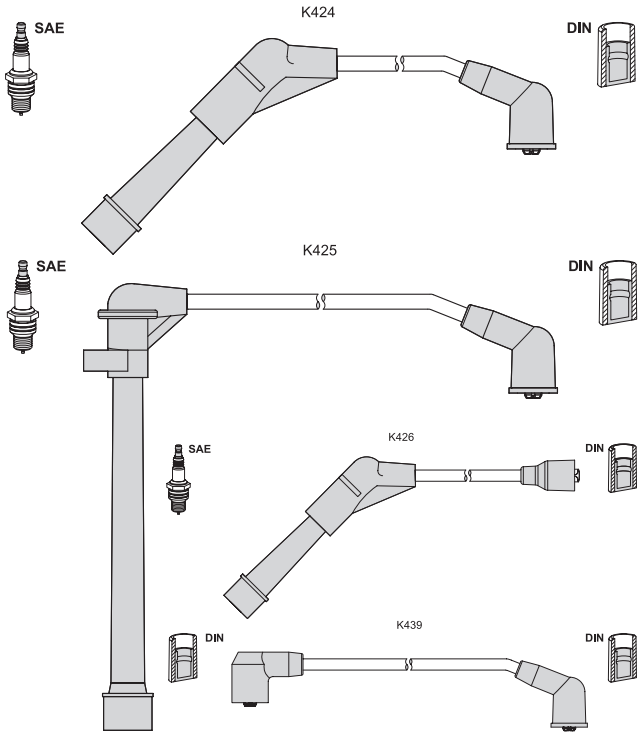

Nissan Maxima (J30) 3.0 i	10.88 - 06.94	125	VG30E

T266B K028 30 40 60 70 K061 40

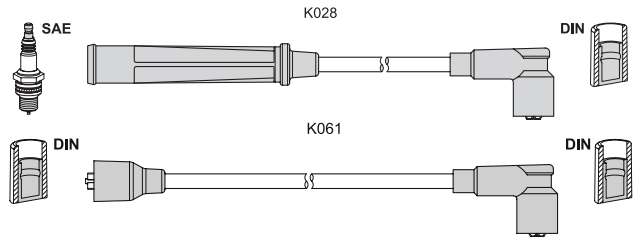

Nissan Sunny I (B11) 1.5	03.82 - 08.90	55	E15S
Sunny II (N13) 1.5	06.86 - 10.88	52	E15S

< T266B

Nissan Sunny II (N13) 1.6	06.86 - 10.88	62	E16S
Sunny II Coupe (B12) 1.5	06.86 - 10.88	52	E15S
1.6	06.86 - 10.88	62	E16S
Sunny II Hatch. 1.5	06.86 - 10.88	52	E15S
1.6	06.86 - 10.88	62	E16S
Sunny II Traveller 1.5	06.86 - 10.88	52	E15S
1.6	06.86 - 10.88	62	E16S

T267B K036 50 60 70 K013-40 K070 50

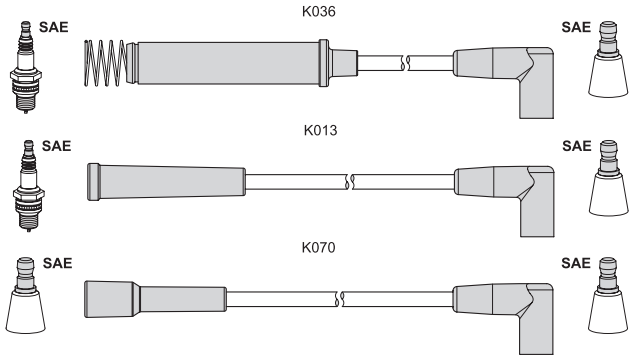

Opel Ascona C CC 1.6 i cat	09.86 - 08.88	55	C 16 NZ/C 16 LZ
1.6 i cat	09.86 - 08.88	55	C 16 NZ/C 16 LZ
Kadett E (39_, 49_) 1.6 i	09.86 - 08.91	55	E 16 NZ
1.6 i cat	09.86 - 08.91	55	C 16 NZ/C 16 LZ
Kadett E Cabriolet 1.6 i	10.86 - 02.93	55	E 16 NZ
1.6 i cat	10.87 - 02.93	55	C 16 NZ/C 16 LZ
Kadett E Caravan 1.6 i	09.86 - 08.91	55	E 16 NZ
1.6 i cat	09.86 - 08.91	55	C 16 NZ/C 16 LZ
Kadett E CC 1.6 i	09.86 - 08.91	55	E 16 NZ
1.6 i cat	09.86 - 08.91	55	C 16 NZ/C 16 LZ
Kadett E Combo 1.6 i	08.91 - 07.94	55	C 16 NZ
Kadett E Van 1.6 i	08.89 - 09.93	55	C 16 NZ

T268B K037 90 65 80 K010-50 K061 70

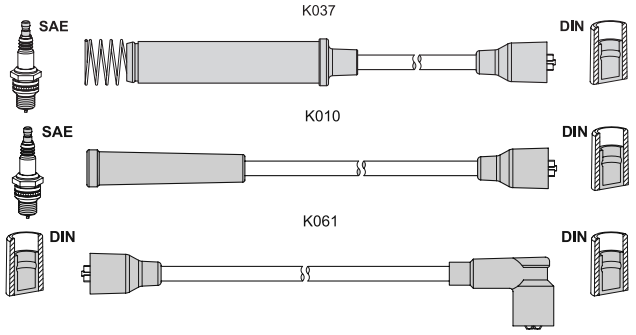

Opel Ascona C 1.8	09.87 - 08.88	62	E 18 NV
1.8 E	01.85 - 08.86	74	S 18 NV
2.0 i	09.86 - 08.88	85	20 NE
2.0 i cat	09.86 - 08.88	85	C 20 NE
Ascona C CC 1.8	09.87 - 08.88	62	E 18 NV
1.8 E	01.85 - 08.86	74	S 18 NV
2.0 i	09.86 - 08.88	85	20 NE
2.0 i cat	09.86 - 08.88	85	C 20 NE

T269B K035 80 70 60 K015-40 K066 50

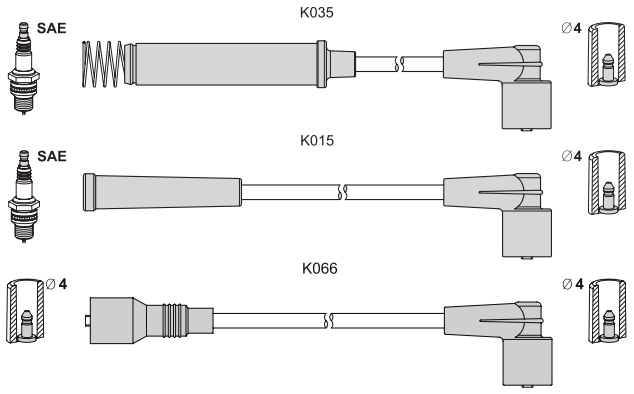

Opel/Vauxhall Astra F 1.4	09.91 - 09.93	55	14 NV
1.4 i	11.94 - 09.98	44	C 14 NZ/X 14 NZ
Astra F Caravan 1.4	09.91 - 09.93	55	14 NV
1.4 i	09.91 - 01.98	44	C 14 NZ
Astra F CC 1.4	09.91 - 09.93	55	14 NV
1.4 i	11.94 - 01.98	44	C 14 NZ
Astra F Van 1.4 i	10.91 - 01.99	44	C 14 NZ

T271B K034 80 80 60 K014-40 K066 30

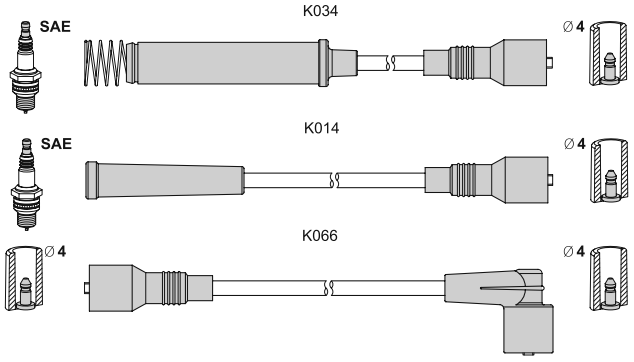

Opel/Vauxhall Calibra A 2.0 i	06.90 - 07.97	85	C 20 NE
2.0 i 4x4	06.90 - 07.97	85	C 20 NE
Kadett E (39_, 49_) 1.8 i	09.90 - 08.91	66	C 18 NZ
Kadett E Caravan 1.8 i	06.85 - 08.91	66	C 18 NZ/C 18 NT
Kadett E CC 1.8 i	06.85 - 08.91	66	C 18 NZ
Vectra A 1.8 i cat	03.90 - 11.95	66	C 18 NZ
1.8 S	09.88 - 07.89	65	E 18 NVR
1.8 S	09.89 - 10.90	66	18 SV
1.8 S 4x4	01.89 - 07.89	65	E 18 NVR
2.0 i	09.88 - 10.90	85	20 NE
2.0 i	06.90 - 09.92	95	20 SEH
2.0 i cat	09.88 - 11.95	85	C 20 NE
2.0 i 4x4	01.89 - 10.90	85	20 NE
2.0 i 4x4	06.90 - 09.92	95	20 SEH
2.0 i 4x4 cat	01.89 - 11.95	85	C 20 NE
Vectra A CC 1.8 i	09.88 - 10.90	66	18 SV
1.8 i cat	03.90 - 11.95	66	C 18 NZ
1.8 S	09.88 - 07.89	65	E 18 NVR
2.0 i	09.88 - 10.90	85	20 NE
2.0 i cat	09.88 - 11.95	85	C 20 NE
2.0 i GT	06.90 - 11.95	95	20 SEH

T 273B ▶

T273B K036 50 60 70 80 K015 40

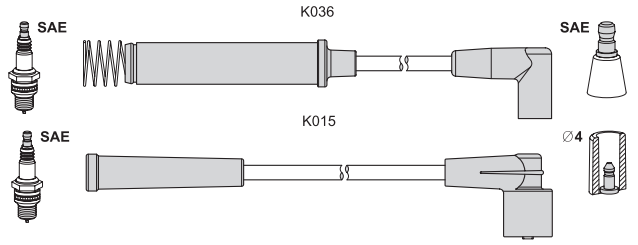

Opel/Vauxhall Corsa A CC 1.2 i	09.89 - 03.93	33	C 12 NZ
1.4 i	01.90 - 03.93	44	C 14 NZ
1.6 GSI	05.88 - 03.92	74	E 16 SE
Corsa A TR 1.2 i	09.89 - 03.93	33	C 12 NZ
1.4 i	10.89 - 03.93	44	C 14 NZ

T274B K034 80 80 60 K014-40 K066 55

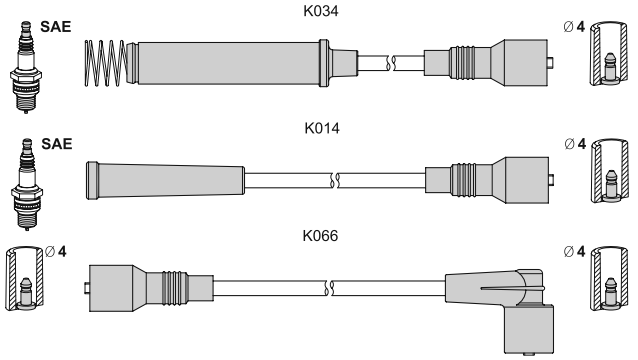

Opel/Vauxhall Astra F 1.8 i	03.92 - 09.98	66	C 18 NZ
2.0 i	03.92 - 09.98	85	C 20 NE
Astra F Cabriolet 2.0 i	03.93 - 10.94	85	C 20 NE
Astra F Caravan 1.8 i	09.91 - 01.98	66	C 18 NZ
2.0 i	09.91 - 07.94	85	C 20 NE
Astra F CC 1.8 i	09.91 - 01.98	66	C 18 NZ
2.0 i	09.91 - 01.98	85	C 20 NE
Opel Kadett E (39_, 49_) 1.8 S	09.87 - 08.91	62	E 18 NV
2.0 i	03.87 - 08.91	85	20 NE/20 SE
2.0 i cat	03.87 - 08.91	85	C 20 NE
Kadett E Cabriolet 2.0 i	10.86 - 02.93	85	20 NE
2.0 i cat	10.86 - 02.93	85	C 20 NE
Kadett E Caravan 1.8 S	09.87 - 08.91	62	E 18 NV
2.0 i	09.87 - 08.91	85	20 NE
2.0 i cat	09.87 - 08.91	85	C 20 NE
Kadett E CC 1.8 S	09.87 - 08.91	62	E 18 NV/S 18 NV
2.0 GSI	09.86 - 08.91	85	20 NE
2.0 GSI	09.86 - 08.91	95	20 SEH
2.0 GSI cat	09.86 - 08.91	85	C 20 NE

T275B K025 70 60 50 40 K060 50

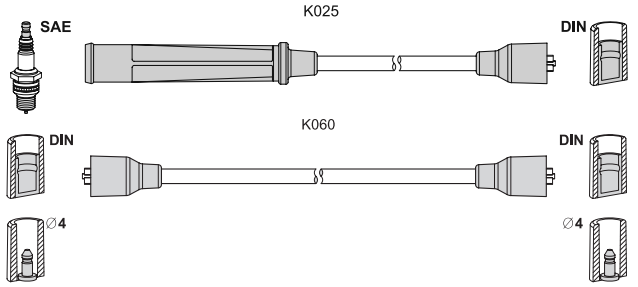

Opel Manta A 1.6	02.75 - 08.75	44	16 N
1.6	09.70 - 08.75	50	16 N
1.6	02.75 - 08.75	55	16 S
1.6 S	09.70 - 08.75	59	16 S

< T275B

Opel Manta A 1.9 S	09.70 - 08.75	66	19 S
Manta B 1.3 S	08.81 - 08.86	55	13 S
1.6 N	09.75 - 12.80	44	16 N
1.6 S	09.75 - 12.81	55	16 S
1.8 S	07.82 - 08.87	66	18 S
1.9 S	09.75 - 12.80	66	19 S
2.0 E	08.77 - 08.88	81	20 E
2.0 S	08.77 - 08.84	74	20 S
Manta B CC 1.3 S	08.79 - 08.86	55	13 S
1.6	08.77 - 07.81	55	16 S
1.6 N	09.75 - 12.80	44	16 N
1.8 S	07.82 - 08.87	66	18 S
2.0 E	08.77 - 08.88	81	20 E
2.0 S	08.77 - 08.84	74	20 S
Monza A (22_) 2.0 E	03.83 - 10.84	85	H 20 E
Rekord E 2.0 E	09.77 - 10.84	81	20 E
2.2 E	11.84 - 08.86	85	22 E
Senator A (29_) 2.0 E	03.83 - 10.84	85	H 20 E
2.2 E	11.84 - 08.87	85	22 E

T277B K039 63 58 40 35 K070 43

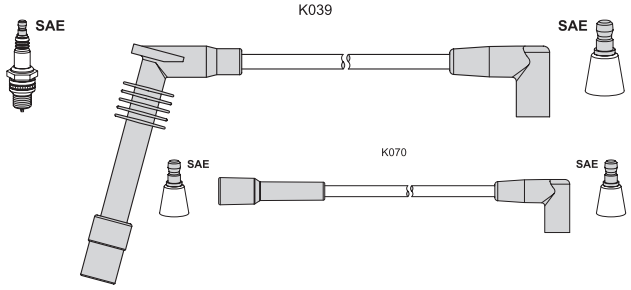

Opel/Vauxhall Astra F 1.6 i	03.92 - 09.98	55	C 16 NZ
Astra F Caravan 1.6 i	09.91 - 01.98	55	C 16 NZ/X 16 SZR
Astra F CC 1.6 i	09.91 - 01.98	55	C 16 NZ/X 16 SZR
Astra F Van 1.6 i	10.91 - 04.93	55	C 16 NZ

T278B K010 40 50 70 80 K060 30

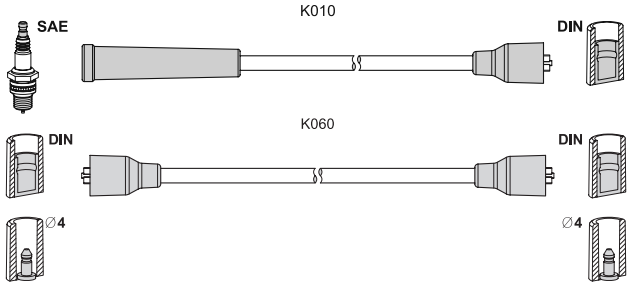

Opel/Vauxhall Omega A 2.4 i	09.88 - 12.90	92	C 24 NE
Omega A Caravan 2.4 i	09.88 - 12.90	92	C 24 NE

T279B K014 80 70 50 40 K066 50

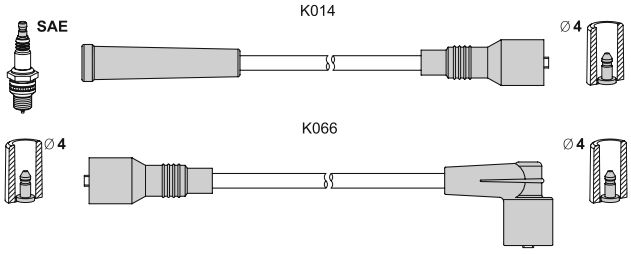

Opel/Vauxhall Frontera A 2.4 i	03.92 - 10.98	92	C 24 NE
Omega A 2.4 i	01.90 - 03.94	92	C 24 NE
Omega A Caravan 2.4 i	01.90 - 03.94	92	C 24 NE

T280B K014 100 90 70 K015 70 50 30 K067 60

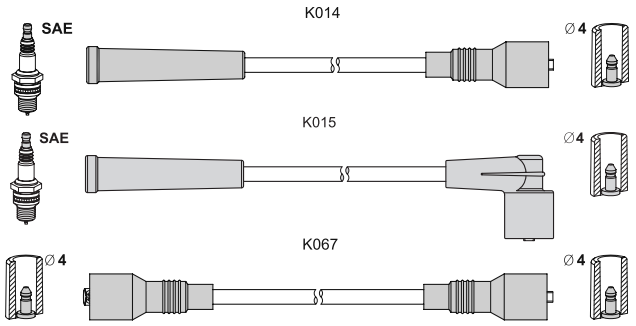

Opel/Vauxhall Omega A 2.6 i	09.90 - 03.94	110	C 26 NE
Omega A Caravan 2.6 i	09.90 - 03.94	110	C 26 NE
Senator B 2.6 i	09.90 - 09.93	110	C 26 NE

T281B K371 54 56 60 K372 54 56 63 -

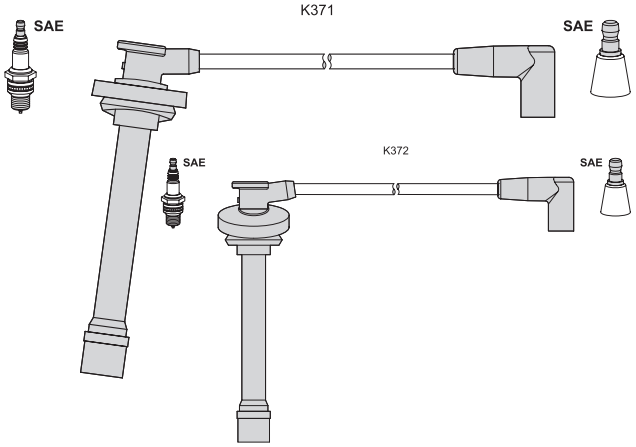

Opel/Vauxhall Monterey A 3.2	06.92 - 07.98	130	6 VD1

T282B K038 48 44 40 24 -

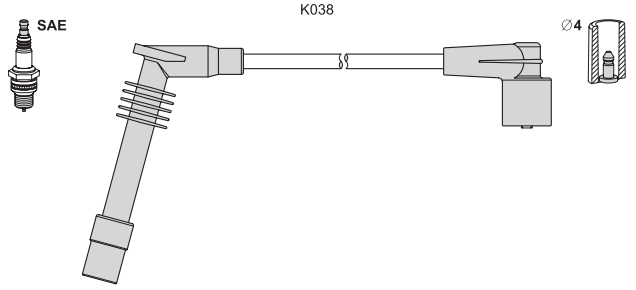

Opel/Vauxhall Astra G Caravan 1.6	02.98 - 09.00	55	X 16 SZR
1.6	09.00 - 07.04	62	Z 16 SE
Astra G CC 1.6	02.98 - 09.00	55	X 16 SZR
1.6	09.00 - 01.05	62	Z 16 SE
Astra G Sedan 1.6	09.98 - 09.00	55	X 16 SZR
1.6	09.00 - 01.05	62	Z 16 SE
Astra G Van (F70) 1.6	01.99 - 09.00	55	X 16 SZR
1.6	09.00 - 04.05	62	Z 16 SE
Meriva 1.6	05.03 - 05.10	64	Z 16 SE
Zafira (F75_) 1.6 CNG	09.01 - 06.05	71	Z 16 YNG

T283B K010 30 40 40 50 K061 50

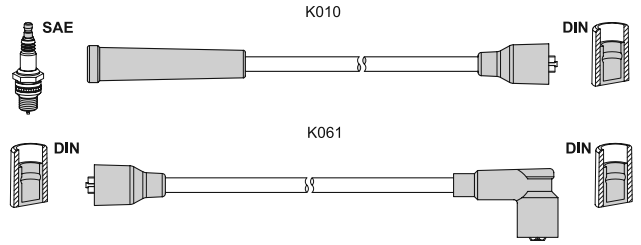

Opel Rekord E 1.8	11.82 - 08.86	55	18 N
1.8	11.82 - 08.86	66	18 S
1.8	05.85 - 08.86	74	C 18 NV
Rekord E Caravan 1.8	11.82 - 08.86	55	18 N
1.8	11.82 - 08.86	66	18 S
1.8	05.85 - 08.86	74	C 18 NV

T284B K014 90 80 60 60 40 40 K067 50

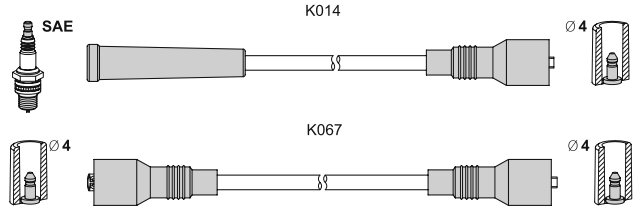

Opel/Vauxhall Senator A 3.0	09.85 - 08.87	115	C 30 LE
Senator B 2.5 i	09.90 - 09.93	103	25 NE
3.0	09.87 - 09.93	115	C 30 LE
3.0	01.88 - 09.90	130	30 NE
3.0 i cat	01.88 - 09.93	130	C 30 NE

T285B K400 78 78 64 64 -

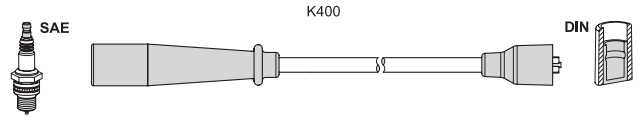

Opel Campo (TF_) 2.3	08.91 - 08.94	69	4 ZD1
2.3 4x4	08.91 - 08.94	69	4 ZD1

T286B K169 20 27 36 44 K066 26

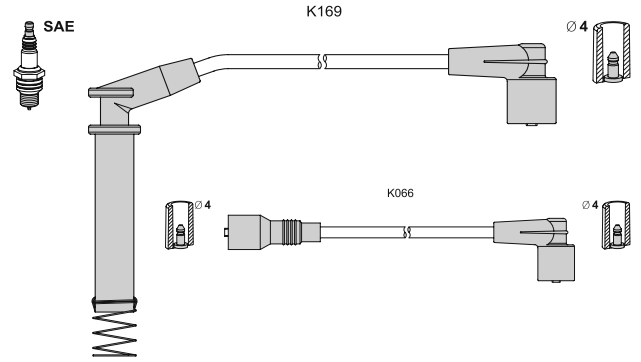

Opel/Vauxhall Corsa A CC 1.6 GSI	09.89 - 03.93	72	C 16 SEI
1.6 GSI	05.88 - 03.92	74	E 16 SE
1.6 GSI cat	02.92 - 03.93	74	C 16 SE

T 287B ▶

T287B K036 70 70 60 K013-50 K070 40

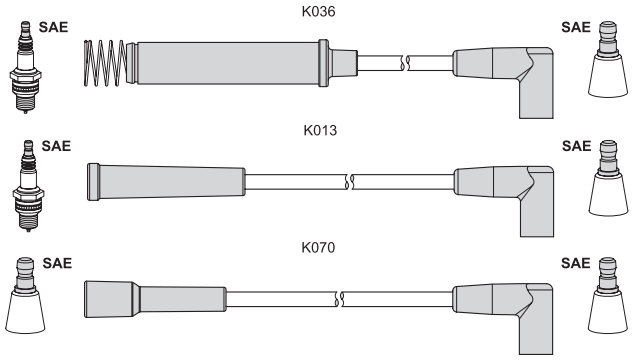

Opel/Vauxhall Vectra A 1.6i	09.88 - 05.93	60	16 SV
1.6 i	09.88 - 11.95	55	C16 NZ / E16 NZ
Vectra A CC 1.6 i cat	09.88 - 11.95	55	C 16 NZ
1.6 S	09.88 - 12.90	60	16 SV

T288B K035 80 70 60 K015-50 K066 30

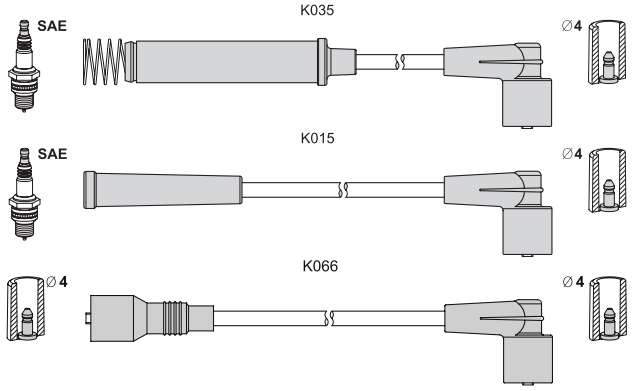

Opel/Vauxhall Combo (71_) 1.4	07.94 - 10.01	44	C 14 NZ/X 14 SZ
Corsa A CC 1.2	09.82 - 08.90	33	E 12 GV/12 NC
1.2 i	09.89 - 03.93	33	C 12 NZ
1.4 i	01.90 - 03.93	44	C 14 NZ
1.4 S	01.90 - 03.93	53	14 NV
1.4 Si	09.91 - 03.93	60	C 14 SE
Corsa A TR 1.2 i	09.89 - 03.93	33	C 12 NZ
1.4 i	10.89 - 03.93	44	C 14 NZ
1.4 S	09.89 - 03.93	53	14 NV
Vectra A 1.4 S	01.91 - 06.92	55	14 NV
1.6	09.88 - 05.93	60	16 SV
Vectra A CC 1.4 S	01.91 - 06.92	55	14 NV
1.6 S	01.91 - 05.93	60	16 SV

T289C K117 60 58 50 37 - alternative T096B

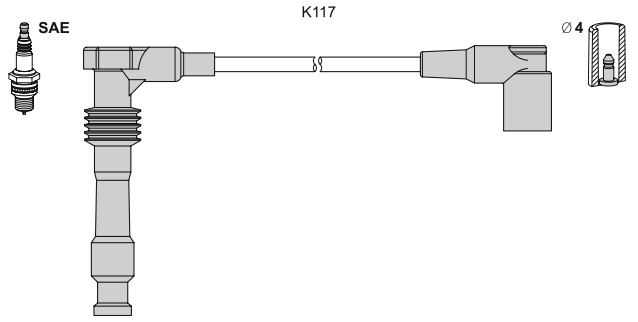

Opel/Vauxhall Astra F CC 1.6 i 16V	08.94 - 01.98	74	X 16 XEL
Astra F Clas. Car. 1.6 i 16V	01.98 - 01.05	74	X 16 XEL
Astra F Classic CC 1.6 i 16V	01.98 - 08.02	74	X 16 XEL
Astra F Clas. Sed. 1.6 i 16V	01.98 - 08.02	74	X 16 XEL
Corsa B 1.4 i 16V	09.94 - 09.00	66	X 14 XE

< T289C

Opel/Vauxhall Corsa B 1.6 GSI 16V	03.93 - 09.00	80	C 16 XE
1.6 i 16V	09.94 - 09.00	78	X 16 XE
1.6 i 16V	08.97 - 09.00	74	C 16 SEL
Vectra B (36_) 1.6 i 16V	10.95 - 04.02	74	Z16/Y16 XE/X16 XEL
Vectra B Caravan 1.6 i 16V	11.96 - 07.02	74	Z16/Y16 XE/X16 XEL
Vectra B CC 1.6 i 16V	10.95 - 07.02	74	Z16/Y16 XE/X16 XEL

T290B K010 55 55 55 65 K060 80

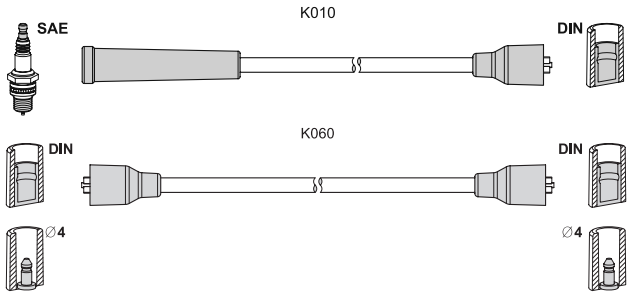

Peugeot 205 I (741A/C) 1.3	02.84 - 10.87	47	G1A
1.5	02.84 - 10.87	63	Y2/K
205 II (20A/C) 1.1 XA	07.87 - 10.88	40	E1
1.3	08.90 - 07.92	47	G1A
309 I (10C, 10A) 1.1	10.85 - 07.89	40	E1
1.3	10.85 - 07.89	47	G1A
1.3 XL	09.86 - 08.89	52	

T291B K028 50 75 85 95 K061 60

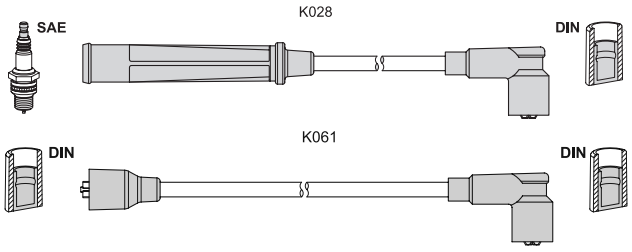

Peugeot 205 I (741A/C) 1.1	02.83 - 10.87	36	109N (XW7)
1.4	02.83 - 10.87	53	150 (XY6B)
1.6	08.86 - 10.87	55	BAZ (XU5CP)
205 II (20A/C) 1.4	01.87 - 07.88	53	150 (XY6B)
1.6	10.87 - 01.90	55	BAZ /B1A

T292C K364 35 50 60 70 75 90 K094 42 alternative T093B

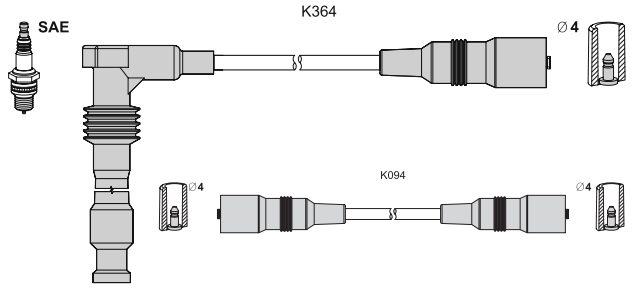

Opel/Vauxhall Omega A 3.0 24V	09.89 - 03.94	147	C 30 SEJ
3.0 24V	09.89 - 03.94	150	C 30 SE
Omega A Caravan 3.0 24V	09.89 - 03.94	147	C 30 SEJ
Senator B 3.0 24V	09.89 - 09.93	150	C 30 SE

T294B K400 78 75 64 60 K062 55

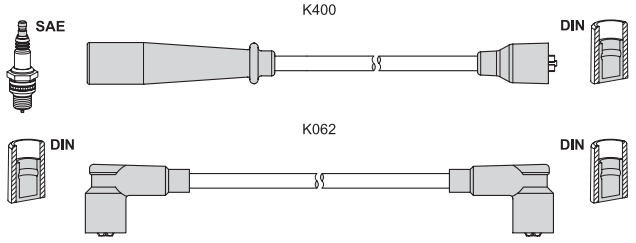

Opel Campo (TF_) 2.3	08.94 - 09.96	72	4 ZD1/23 P
2.3 4x4	08.94 - 09.96	72	4 ZD1

T295P K525 23 43 + + -

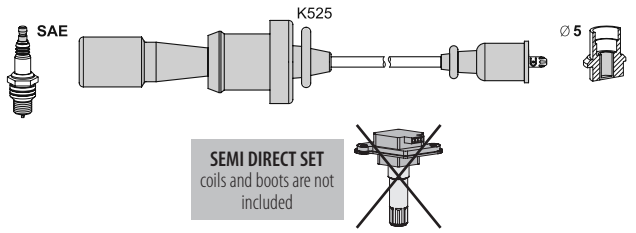

Mitsubishi Lancer Cargo I 2.0	09.03 - 12.07	99	4G63 (DOHC 16V)
Lancer VI 2.0 16V EVO	08.96 - 08.03	206	4G63 Turbo
Outlander I (CU_) 2.0	05.03 - 10.06	100	4G63 (DOHC 16V)
2.0 4WD	05.03 - 10.06	93	4G63 (DOHC 16V)
2.0 4WD	05.03 - 10.06	100	4G63 (DOHC 16V)
2.0 4WD	05.03 - 10.06	177	
2.0 Turbo 4WD	04.04 - 10.06	148	4G63 T (DOHC 16V)

T296B K468 35 40 52 K459 75 90 95 K078 50

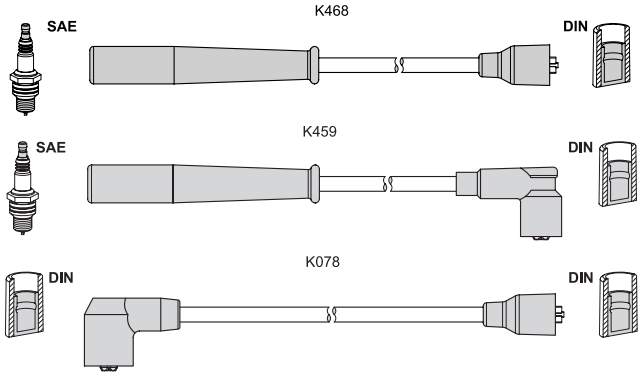

Mazda MPV I (LV) 3.0i V6	05.96 - 09.99	109	JE94
3.0i V6	03.95 - 09.99	113	JE94

T297B K466 15 28 33 48 -

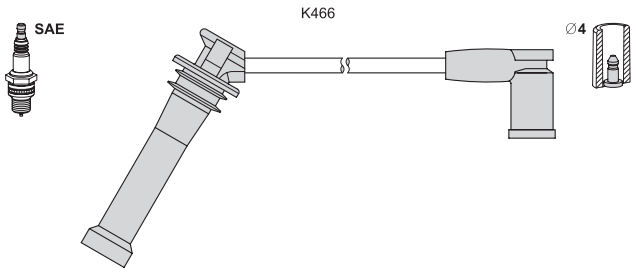

Mazda 6 1.8	08.02 - 08.07	88	L813
2.0	06.02 - 08.07	104	LF18/LF17
2.3	06.02 - 08.07	122	L3C1
6 Hatchback 1.8	08.02 - 08.07	88	L813
2.0	08.02 - 08.07	104	LF18/LF17
2.3	08.02 - 08.07	122	L3C1

< T297B

Mazda 6 Station Wagon 1.8	08.02 - 08.07	88	L813
2.0	08.02 - 08.07	104	LF18/LF17
2.3	08.02 - 08.07	122	L3C1
2.3 AWD	11.02 - 08.07	119	L3C1
MPV II (LW) 2.3	07.02 - 02.06	104	L3

T300B K459 72 65 52 47 -

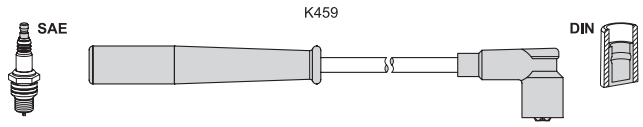

Mazda Demio 1.3 16V	08.98 -	46	B3 ME
1.3 i 16V	08.98 - 04.00	53	B3 (16V)
1.5 16V	04.00 -	55	B5E
Subaru Justy II 1.3 GX 4x4	10.95 - 11.03	50	EF13

T301B K459 36 51 53 67 -

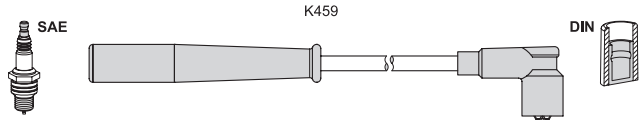

Mazda E2000 (SR2) 2.0 Van	03.91 - 05.94	60	FE60/FE61/FE
2.0 Van	06.94 - 05.03	70	FE

T302B K153 25 32 40 49 -

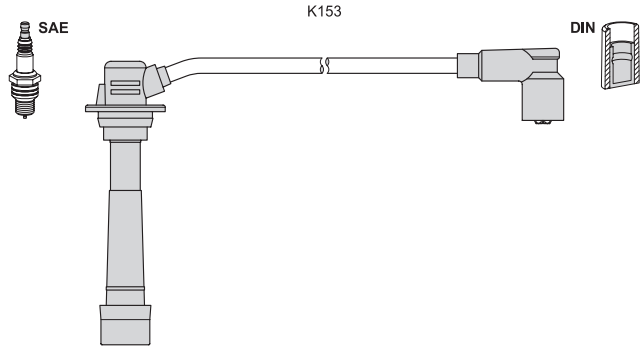

Mazda Xedos 6 1.6 16V	06.94 - 10.99	79	B6 (DOHC)
1.6 16V	08.92 - 05.94	83	B69

T303B K012 35 35 35 35 K061 30

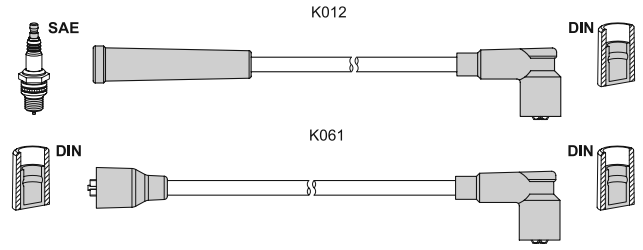

Renault 5 (122_) 1.3	09.76 - 09.79	31	810 726
1.3	06.79 - 09.84	33	810 719
1.3	09.75 - 09.84	47	810 725
1.3 automatic	06.79 - 09.84	40	810 729
1.4	01.82 - 12.85	46	847 725/C2J 713

T 304B ▶

T304B K010 45 40 35 35 K327 80

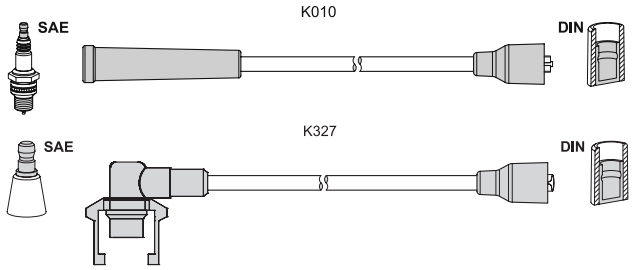

Renault 9 (L42_) 1.4	09.85 - 12.88	49	C2J 766/_ 720/_ 768
11 (B/C37_) 1.1	03.83 - 06.86	35	C1E 715/C1E 720
1.4	03.83 - 12.88	44	C1J 715/C2J 730
1.4	05.83 - 12.85	53	C2J 717/C2J 755
1.4 Turbo	04.84 - 12.86	77	C1J 764/C1J 760
1.4 Turbo	10.86 - 12.88	85	C1J 770/C1J 782
19 I (B/C53_) 1.2	01.88 - 12.92	40	C1G 730
1.4	01.89 - 12.89	43	C2J 772
1.4 cat	01.89 - 04.92	43	C3J 710
19 I Chamade (L53_) 1.2	01.88 - 12.92	40	C1G 730
1.4	07.88 - 04.92	43	C3J 710/C2J 772
19 I Van (S53_) 1.2	01.88 - 12.92	40	C1G 730
19 II (B/C53_) 1.4	04.92 - 12.95	43	C3J 710
19 II Chamade (L53_) 1.4	04.92 - 12.95	43	C3J 710
Rapid Van 1.2	09.91 - 03.98	40	C3G 712/C3G 710
1.4	07.85 - 08.91	43	C1J 780/C1J 768
1.4	03.86 - 08.91	44	C2J 784
1.4 cat	08.88 - 03.98	43	C3J 762/_700/_ 702
Super 5 (B/C40_) 1.4	10.84 - 06.88	43	C1J 780/C1J 768
1.4	06.87 - 08.90	44	C2J 784
1.4	06.87 - 07.89	49	C2J 782
1.4	10.84 - 07.89	52	C2J 789/_700/_780
1.4 cat	10.85 - 12.96	43	C3J 700/_702/_760
1.4 Turbo	08.85 - 06.89	85	C1J 788
1.4 Turbo	04.85 - 08.90	88	C1J 784/_782/_788
Super 5 Van (S40_) 1.4	09.85 - 07.86	44	C3J 700
Volvo 340-360 1.4	08.79 - 07.83	47	B 14.3 E

T305B K010 35 40 K012 50 K061 30

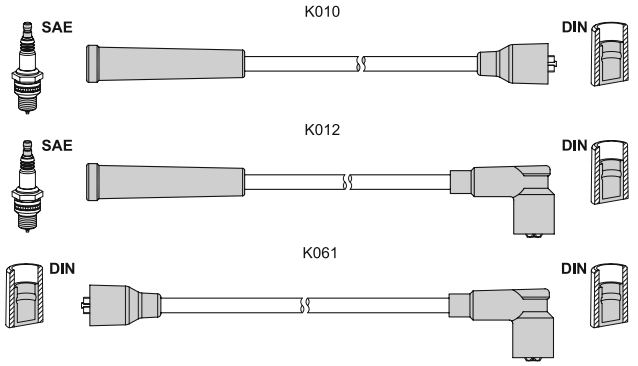

Daihatsu Hijet 1.0 i Bus	07.94 - 05.98	35	CB42
1.0 i Van	07.94 - 05.98	35	CB42

T308B K415 60 70 80 90 K496 20

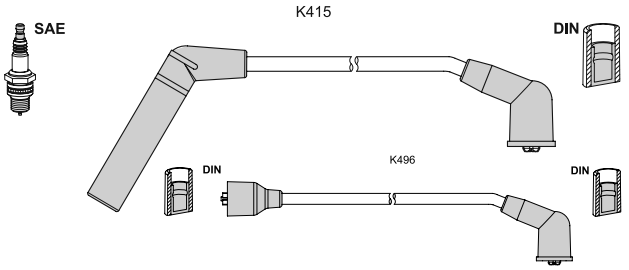

Hyundai H-1 Van 2.4	03.00 - 04.04	82	G4CS
H100 Bus, Van 2.4	01.97 - 03.00	84	G4CS
2.4	07.93 - 03.00	90	G4CS

T309B K415 28 30 40 44 -

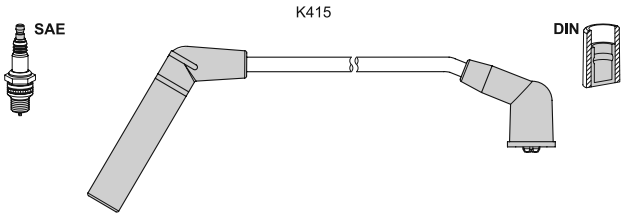

Hyundai Atos (MX) 1.0 i	08.00 - 03.02	40	G4HC
1.0 i	03.01 -	43	G4HC-E
Atos Prime (MX) 1.0 i	08.00 -	40	G4HC
1.0 i	03.01 - 04.03	43	G4HC-E
Getz 1.1	09.02 - 09.05	46	G4HD
i10 1.1	04.11 -	51	G4HG
1.1	01.08 -	49	G4HG
Kia Picanto (BA) 1.0	11.09 -	46	G4HE

T310B K249 42 55 60 60 -

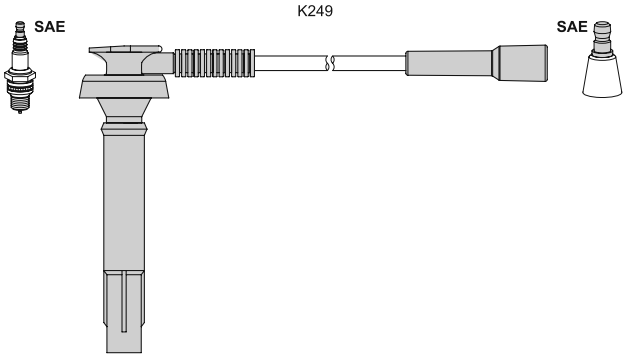

Subaru Forester (SG) 2.0	09.02 -	92	EJ20
2.0 X	09.05 -	116	EJ204
2.5	12.03 -	155	EJ25
Impreza Sedan 2.0	12.00 -	92	EJ20
Impreza St. Wag. 2.0	12.00 -	92	EJ20
Legacy III (BE, BH) 2.0	04.99 - 08.03	92	EJ20
2.5	10.98 - 08.03	115	EJ25
Legacy III St. Wag. 2.0	12.98 - 08.03	92	EJ20
2.5	12.98 - 08.03	115	EJ25
Outback (BE, BH) 2.5	10.00 - 08.03	115	EJ25
2.5	09.08 - 09.09	127	EJ251

T311B K333 40 50 55 70 K316 60

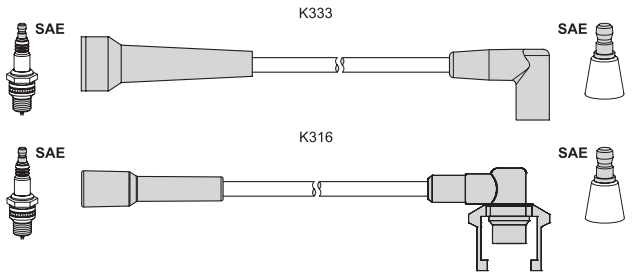

Renault 21, 21 Combi 1.7	09.89 - 10.92	54	F3N 726
1.7	07.89 - 05.93	55	F2N 712/F3N 726
1.7	09.89 - 06.94	66	F3N 723/F3N 722
Super 5 (B/C40_) 1.7	06.87 - 03.95	64	F2N 742/F2N 740

T312B K475 46 55 60 73 -

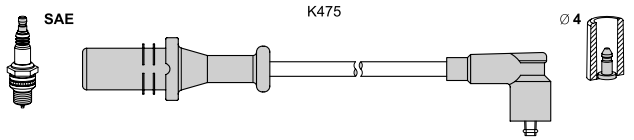

Chery Amulet /A15/ 1.6	08.03 - 10	69	SQR480ED

T313B K474 16 26 36 50 -

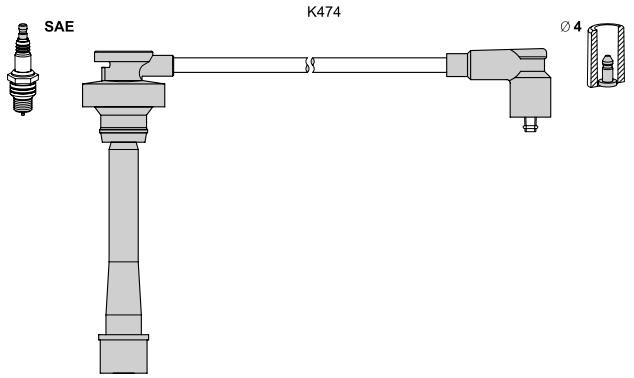

Chery Tiggo /T11/ 2.4	05-	95	4G64S4M
2.4 4x4	11.05-	95	4G64S4M

T314B K491 22 22 33 46 -

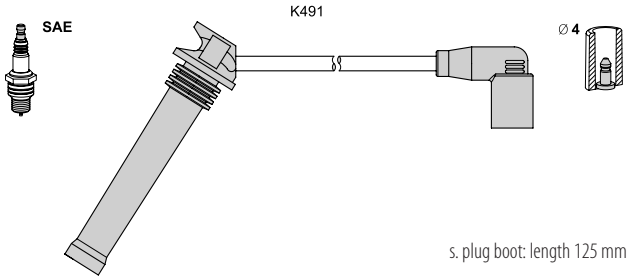

Chery A5 /A21/ 1.6 16V	06-	88	SQR481F
Elara /A21/ 1.6 16V	06-	88	SQR481F
Fora /A21/ 1.6 16V	06-	88	SQR481F
Tiggo /T11/ 1.8i 16V	04.10 - 12.14	97	SQR481FC
Tiggo FL 1.8i 16V	08.13 - 11.16	97	SQR481FC
Tagaz Vortex Estina 1.6	01.09 - 09.12	87	SQR481F
Estina FL-C 2.0i 16V	09.12 - 01.14	95	SQR484
Tingo 1.8i 16V	07.10 - 05.12	97	SQR481FC
Tingo FL 1.8i 16V	05.12 - 01.14	97	SQR481FC

T315B K488 30 40 44 53 -

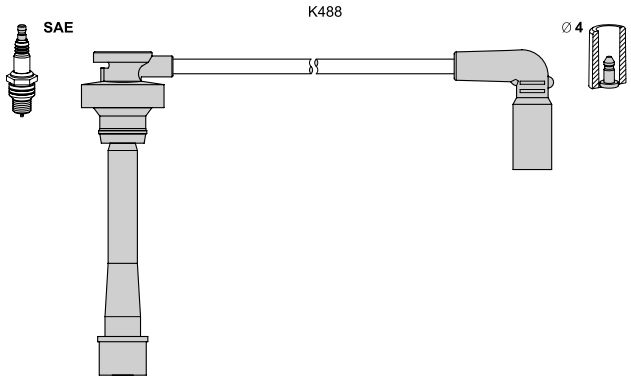

Great Wall Hover 2.4	05 - 10	95	4G64S4M

T316B K497 27 31 40 53 -

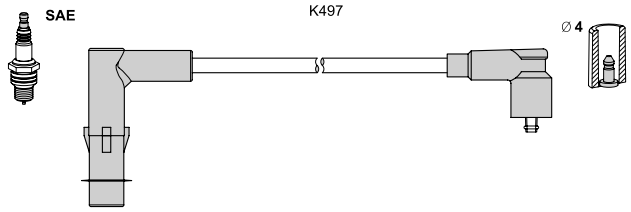

Renault Laguna II 2.0 16V IDE	04.01 -	103	F5R 701/F5R 700
Laguna II Grandtour 2.0 16V	04.01 -	103	F5R 701/F5R 700
Megane I 2.0 16V	07.96 - 08.03	108	F7R 710/F7R 714
Megane I Cabrio 2.0 16V	10.96 - 11.99	108	F7R 710/F7R 714
2.0 16V IDE	11.99 - 08.03	103	F5R 740
Megane I Coach 2.0 16V	03.96 - 11.99	108	F7R 710/F7R 714
2.0 16V IDE	11.99 - 08.03	103	F5R 740

T317B K479 55 40 40 35 -

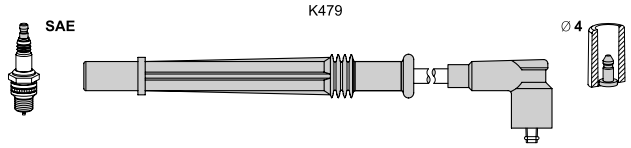

Renault Clio Grandtour 1.2 16V	02.08 -	74	D4F 784
Modus/Gr. Modus 1.2 16V	05.07 -	74	D4F 784
1.2 16V	04.11 -	76	D4F 786
Twingo (CNO) 1.2 Turbo	03.07 -	74	D4F 780/D4F 782

T318B K010 60 65 75 85 K061 70

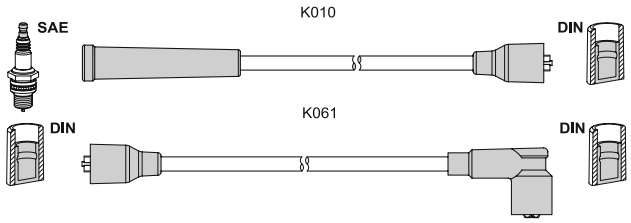

Renault Master I Bus 2.0	10.86 - 07.98	58	J5R 718
2.0	08.80 - 09.86	59	829 731
2.2	08.80 - 07.98	67	J7T 782 /J7T 788
Master I Flatbed 2.0	10.86 - 07.98	58	J5R 728
2.0	07.80 - 06.85	59	829 731
2.0	11.89 - 07.93	60	J5R 718
Master I Van 2.0	10.86 - 07.98	58	J5R 718
2.0	08.80 - 10.86	59	829 731
2.0	08.80 - 07.98	67	J7T 782 /J7T 788

T 319B ▶

T319B K511 35 37 40 50 -

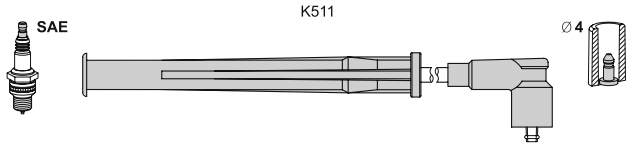

Nissan Kubistar (X76) 1.2	08.03 -	44	D7F 764
Kubistar Van 1.2	08.03 -	44	D7F 764
Renault Clio II 1.2	10.99 -	43	D7F 766/_720/D7F_
1.2	03.99 - 05.01	44	D7F 722
1.2	06.01 - 10.03	55	
Clio II Van 1.2	10.99 -	43	D7F 720/_726/_746
1.2	03.99 - 10.03	44	D7F 722/_726/_746
Kangoo (KC0/1_) 1.2	10.99 -	43	D7F 710/_722/D7F_
Kangoo Express 1.2	10.99 -	43	D7F 710/_ 744/D7F_
Twingo (C06_) 1.2	11.98 -	40	D7F 700/D7F 701
1.2	11.98 -	43	D7F 700/D7F 701
1.2	03.07 -	43	D7F 800

T320B K029 35 40 65 70 K316 70

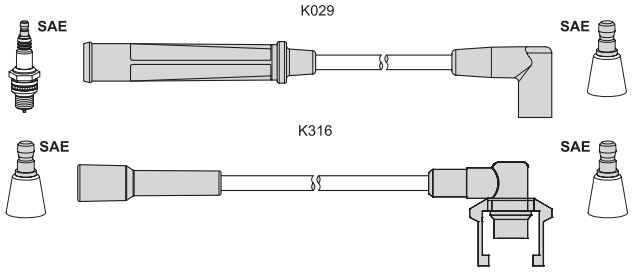

Renault Trafic Bus 1.7	06.86 - 04.89	50	F1N 724
Trafic Bus (TXW) 1.7	08.92 - 08.94	50	F1N 724
Trafic Flatbed (P6) 1.7	06.86 - 04.89	50	F1N 722
Trafic Flatbed (PXX) 1.7	05.89 - 08.94	50	F1N 722
Trafic Van (T1, T3, T4) 1.7	06.86 - 04.89	50	F1N 724
Trafic Van (TXX) 1.7	08.92 - 08.94	50	F1N 720

T321B K502 35 40 65 70 K316 40

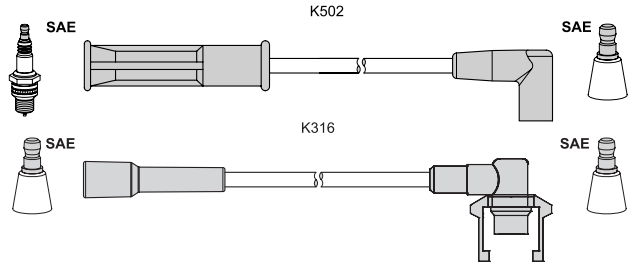

Renault 19 I (B/C53_) 1.2	01.88 - 12.92	40	C1G 730
1.4	01.88 - 12.92	59	E6J 701
19 I Chamade 1.2	01.88 - 12.92	40	C1G 730
1.4	07.88 - 08.90	57	E6J 701
19 I Van (S53_) 1.2	01.88 - 12.92	40	C1G 730
19 II (B/C53_) 1.2	04.92 - 12.95	40	C1G 730
1.4	01.92 - 12.95	55	E7J 742
1.4	01.92 - 12.95	59	E7J 706/E6J 700
19 II Chamade 1.4	11.93 - 12.95	55	E7J 742
1.4	10.94 - 11.95	57	E6J 700
1.4	10.94 - 11.95	59	E7J 706
19 II Van (S53_) 1.2	03.92 - 12.95	40	C1G 730
Clio I 1.2	01.91 - 01.96	40	E7F 706
1.2	05.90 - 09.98	43	E7F 750
1.2	05.90 - 03.96	44	E5F 710
1.4	01.91 - 09.98	55	E7J 756/E7J 757
1.4	01.91 - 09.98	58	E7J 719/E7J 718
1.4	01.91 - 09.98	59	E7J 711

< T321B

Renault Clio I Van (S57_) 1.2	01.91 - 09.98	40	E7F 706
1.2	01.91 - 09.98	44	E7F 750
Megane I (BA0/1_) 1.4 e	01.96 - 02.99	55	E7J 764
1.4 Eco	01.96 - 03.99	52	E7J 624
Megane I Classic 1.4 e	09.96 - 02.99	55	E7J 764
Megane Scenic 1.4 i	01.97 - 09.99	55	E7J 764
Rapid Van 1.4	09.91 - 03.98	55	E7J 720/E7J 724
1.4	01.94 - 03.98	58	E7J 728

T322B K150 55 32 K169 53 32 K319 100

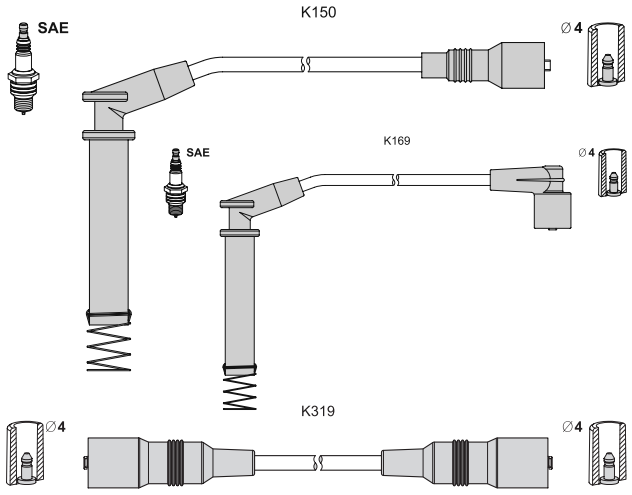

Opel/Vauxhall Frontera A Sport 2.0 i	03.92 - 10.98	85	C 20 NE
Omega A 1.8	09.87 - 03.94	65	E 18 NVR
1.8	09.86 - 03.94	85	18 SEH
1.8 N	09.86 - 08.87	60	18 NV
1.8 S	09.86 - 03.94	66	18 SV
2.0	09.86 - 03.94	90	20 SE
2.0	09.90 - 03.94	74	C 20 NEF
2.0	09.90 - 03.94	73	C 20 NEJ
2.0 i	09.86 - 03.94	85	C 20 NE
Omega A Caravan 1.8	09.87 - 03.94	65	E 18 NVR
1.8	09.86 - 03.94	85	18 SEH
1.8 N	09.86 - 08.87	60	18 NV
1.8 S	09.86 - 03.94	66	18 SV
2.0	09.86 - 03.94	90	20 SE
2.0	09.90 - 03.94	74	C 20 NEF
2.0 i	09.90 - 03.94	73	C 20 NEJ
2.0 i	09.86 - 03.94	85	C 20 NE

T323B K012 40 50 50 K077 50

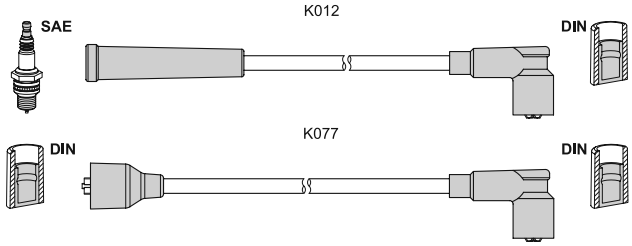

Subaru Justy I 1000 1.0	11.84 - 06.89	40	EF10
1.0	05.87 - 10.95	37	EF10
1.0 4WD	11.84 - 12.90	40	EF10
1.0 4WD	05.87 - 11.94	37	EF10
1200 1.2	05.87 - 10.95	49	EF12
1.2 4WD	10.86 - 12.90	50	EF12
1.2 4WD	05.87 - 05.91	49	EF12
1.2 4WD	10.90 - 12.94	55	EF12

T324B K012 30 50 100 100 K061 30

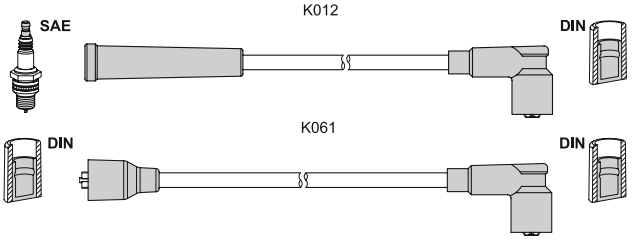

Subaru 1800 XT Coupe 1.8 T	11.85 - 07.90	100	EA82
1.8 Turbo 4WD	01.88 - 12.90	88	EA82
1.8 Turbo 4WD	01.87 - 12.90	96	EA82
1.8 Turbo 4WD	11.84 - 12.90	100	EA82

T325B K010 50 60 70 K061 35

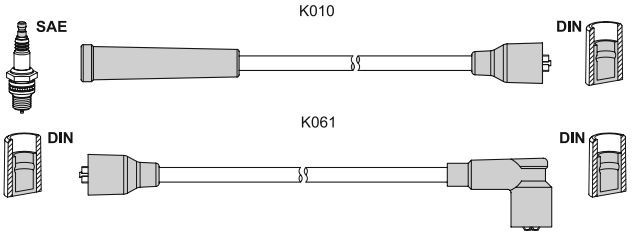

Suzuki Alto I (SS80) 0.8	10.83 - 12.85	29	F8A
0.8	06.82 - 12.85	29	F8B
Alto II (EC) 0.8	01.86 - 11.93	29	F8B

T326B K025 45 50 55 60 K060 55

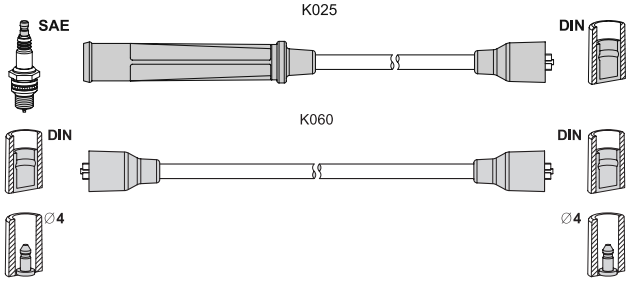

Suzuki Samurai (SJ) 1.0	11.88 - 12.04	33	F10A

T327B K025 60 60 70 70 K060 55

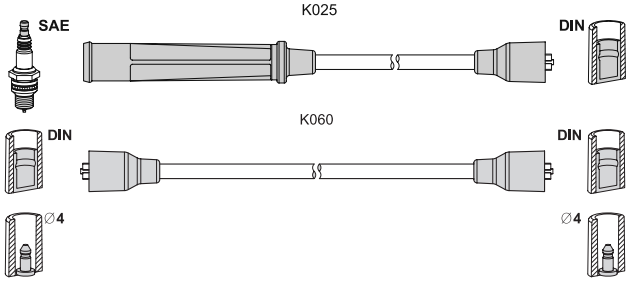

Suzuki Samurai (SJ) 1.3	11.88 - 12.04	44	G13A
1.3	11.88 - 12.04	47	G13A
1.3 Allrad	01.00 - 12.04	59	G13BA

T328B K028 50 55 70 70 K077 55

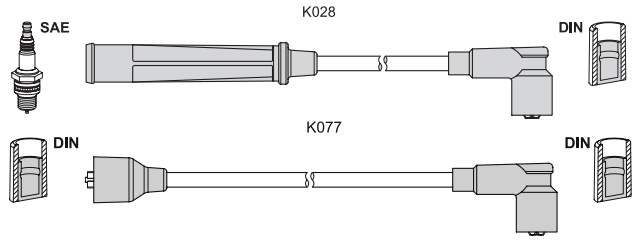

Suzuki SJ 410 1.0	09.81 - 12.88	33	F10A
SJ 410 Cabrio 1.0	09.81 - 12.88	33	F10A
SJ 413 1.3	08.86 - 08.90	44	G13A
1.3	09.84 - 12.88	47	G13A
Swift I (AA) 1.3	10.84 - 03.89	50	G13A
1.3	08.86 - 03.89	47	G13A

T331B K108 50 42 32 30 K079 20

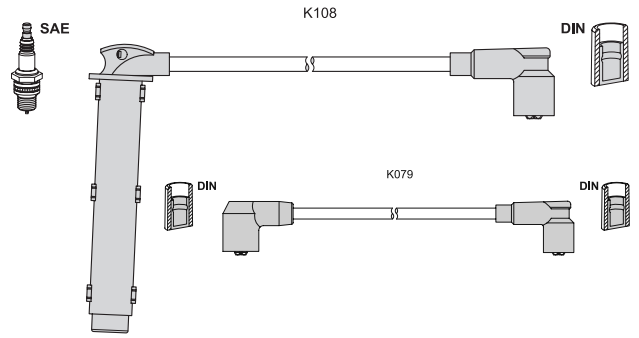

Landrover Freelander 1.8 i 16V	02.98 - 11.00	88	18 K4F
Freelander S. Top 1.8 i 16V	02.98 - 10.06	88	18 K4F

T332B K531 29 25 34 40 -

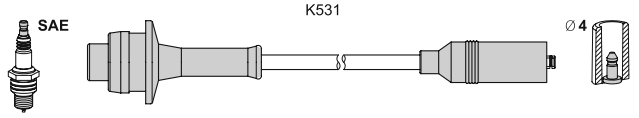

Great Wall Deer G1 2.2i Euro3	04 -	78	491QE
Deer G2 2.2i Euro3	04 -	78	491QE
Deer G3 2.2i Euro3	04 -	78	491QE
Deer G4 2.2i Euro3	04 -	78	491QE
Deer G5 2.2i Euro3	04 -	78	491QE
Pegasus 2.2i Euro3	04 -	78	491QE
RUV Sing 2.2i Euro3	04 -	78	491QE
Safe 2.2i Euro3	04 - 10	78	491QE
Sailor 2.2i Euro3	04 -	78	491QE
Socool C3 2.2i Euro3	04 -	78	491QE

T333B K554 17 30 37 41 -

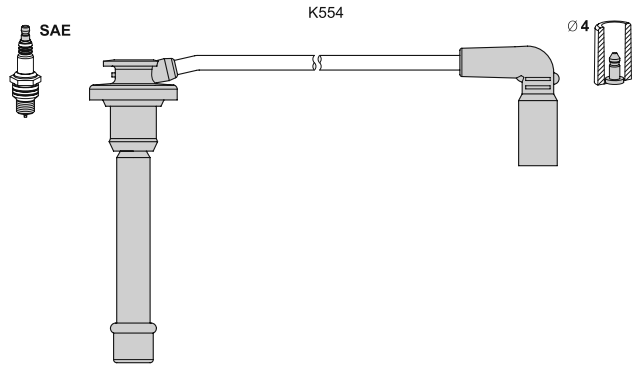

Lifan 320 1.3	09 -	65	LF479Q3

T 333B ▶

< T333B			
Lifan 520 Sedan 1.3	06 -	65	LF479Q3
1.6	06 -	78	LF481Q3
1.6	06 -	85	Tritec
520i Hatchback 1.3	06 -	65	LF479Q3
1.6	06 -	78	LF481Q3
1.6	06 -	85	Tritec
620 1.3	08 -	65	LF479Q3
1.6	08 -	78	LF481Q3
1.6	08 -	85	Tritec
Smily 1.3	09 -	65	LF479Q3
Breez Sedan 1.3	06 -	65	LF479Q3
1.6	06 -	78	LF481Q3
Breez Hatchback 1.3	06 -	65	LF479Q3
1.6	06 -	78	LF481Q3
Solano Sedan 1.3	08 -	65	LF479Q3
1.6	08 -	78	LF481Q3

T334B K010 55 55 55 -

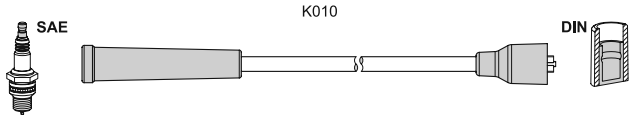

BYD Flyer I - II 0.8	98 -	30	HH368QA1

T335B K557 25 35 40 45 -

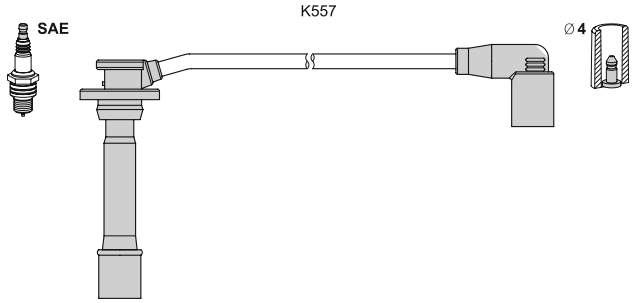

Chery QQ Sweet /S11/ 1.0	05 - 09	39	DA465Q

T336B K010 75 65 K555 45

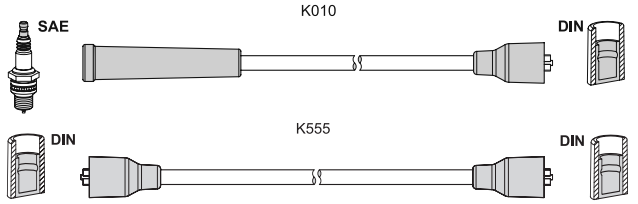

Fiat 126 600 0.6	09.72 - 06.77	17	126 A.000
FSO 126P 0.6	07.77 - 12.91	22	126 A1.048
0.6	07.72 - 07.77	17	

T337B K556 53 76 60 44 -

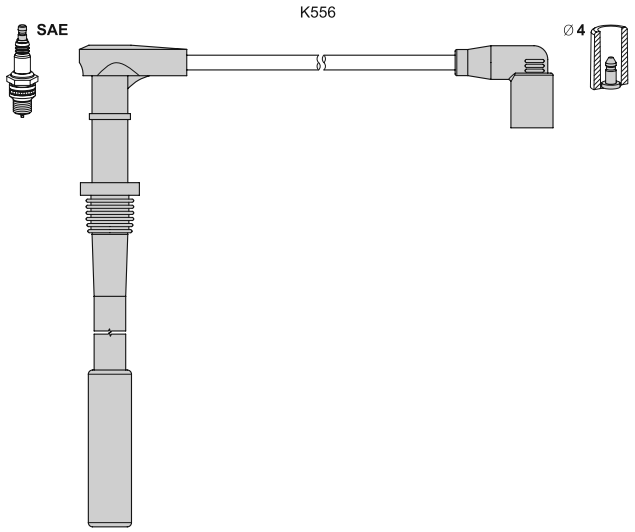

Chery A1 /S12/ 1.3	08 -	62	SQR473F
Kimo /S12/ 1.3	08 -	62	SQR473F

T338B K010 80 90 -

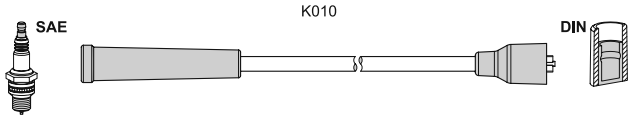

Fiat 126 650 0.65	07.81 - 09.00	18	126 A1.048
FSO 126P 0.65	07.81 - 09.00	18	126 A1.048

T339B K012 45 50 60 65 K061 50

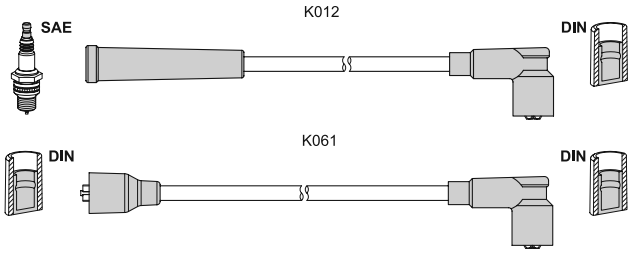

FSO Polonez II 1.5	08.88 - 08.92	55	AA
Polonez II 1.6	08.88 - 08.92	64	CB

T340H K010 40 45 45 50 K075 80

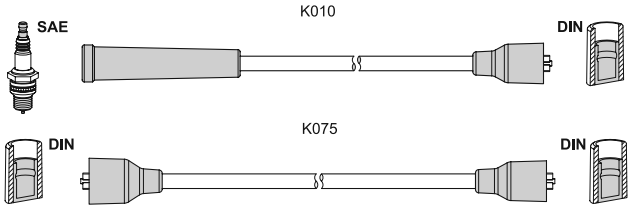

application → T359S

T341H K023 44 36 34 30 -

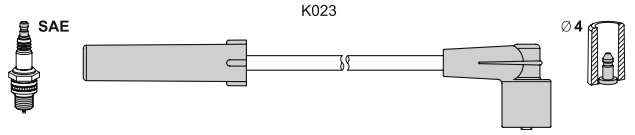

application → T343S

T342H K010 45 35 30 30 K075 40

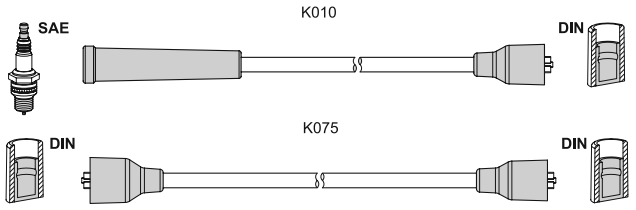

application → T358S

T343S K023 44 36 34 30 -

GAZ 2705 Gazel Bussin. 2.9i Euro 4	03.11 -	90	UMZ 4216
3221 Gazel Bussin. 2.9i Euro 4	03.11 -	90	UMZ 4216
3302 Gazel Bussin. 2.9i Euro 4	03.11 -	90	UMZ 4216
Gazelle Next Bus 2.7i Euro4	04.13 -	78	A2755
Gazelle Next Van 2.7i Euro 4	04.13 -	78	A2755
Gazelle Next Flatbed 2.7i Euro 4	04.13 -	78	A2755
Gazelle Next Bus 2.9i Euro4	04.13 -	78	UMZ 4216
Gazelle Next Van 2.9i Euro 4	04.13 -	78	UMZ 4216
Gazelle Next Flatbed 2.9i Euro 4	04.13 -	78	UMZ 4216
2217 Sobol Bussin. 2.9i Euro 4	03.11 -	90	UMZ 4216
2310 Sobol Bussin. 2.9i Euro 4	03.11 -	90	UMZ 4216
2752 Sobol Bussin. 2.9i Euro 4	03.11 -	90	UMZ 4216

T344H K012 30 40 50 60 K061 60

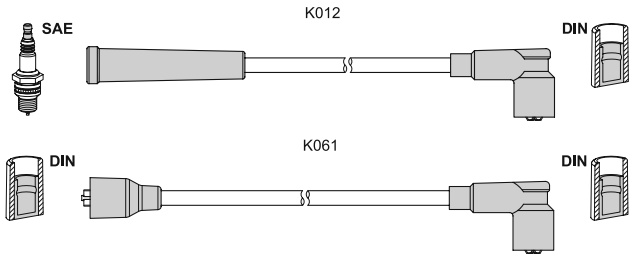

Zastava Yugo 1.1	04.83 - 04.91	41	128A4

T345M K023 44 36 34 30 -

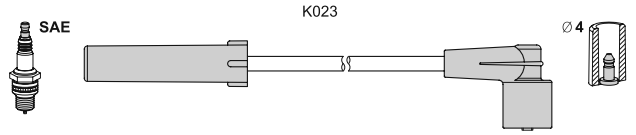

application → T343S

T346H K010 40 40 50 60 K061 60

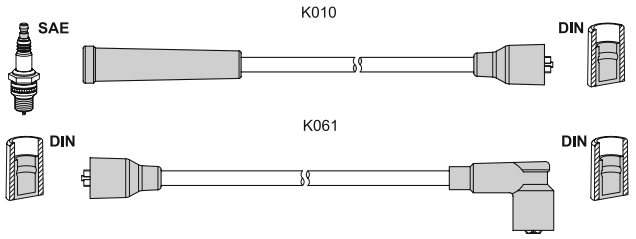

Zastava 101 (1100) 1.1	12.75 - 01.80	37	128A.000
1.1	05.75 - 12.93	41	128AC5.000
1.3	05.75 - 10.81	48	128AR.000
Yugo 0.9	04.80 - 06.92	33	9A

T347M K481 42 29 28 29 -

application → T417S

T348H K010 30 30 40 50 K060 60

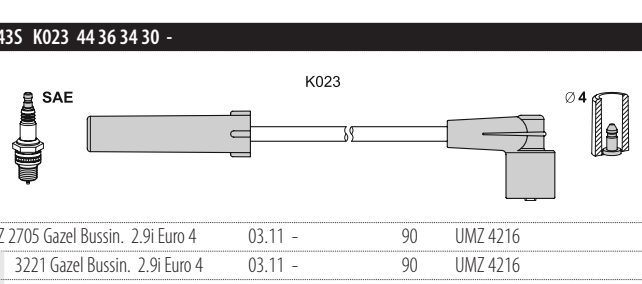

Zastava 101 1.1	06.73 - 01.90	40	128A.000

T349C K454 38 47 64 72 K443 28

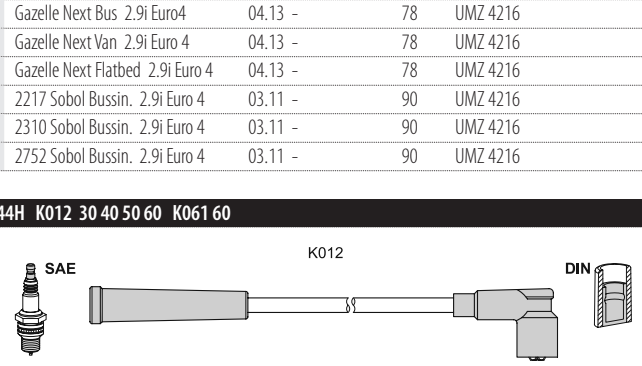

Porsche 944 2.5	01.85 - 07.87	110	M 44.08/M 44._
2.5	08.87 - 12.90	118	M 44.05/_.09/_.10
2.5	06.81 - 07.87	120	M 44.03/_.05/M 44._
2.5 Turbo	08.85 - 07.88	162	M 44.50/M 44.51
2.5 Turbo	09.87 - 07.91	184	M 44.52
2.7	11.88 - 08.89	121	M 44.12/M 44.11
944 Cabrio 2.5 Turbo	11.90 - 07.91	184	M 44.52

T350B K552 14 22 31 40 -

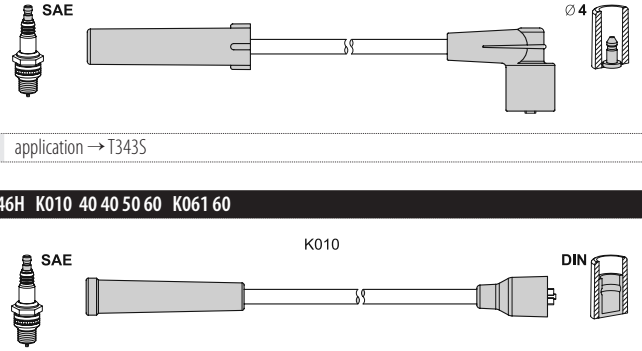

Hyundai i10 (PA) 1.2	11.08 -	57	G4LA
1.2	04.11 -	63	G4LA
i10 (IA) 1.2	12.13 -	64	G4LA
i20 (GB) 1.2	11.14 -	55	G4LA
1.2	11.14 -	62	G4LA
Kia Picanto (TA) 1.2	10.11 -	63	G4LA
Rio III (UB) 1.25 CVVT	10.11 -	63	G4LA
1.25 LPG	10.11 -	63	G4LA
Rio III Sedan (UB) 1.25 CVVT	10.11 -	63	G4LA

T 351B ▶

T351B K133 25 30 43 47 K077 80

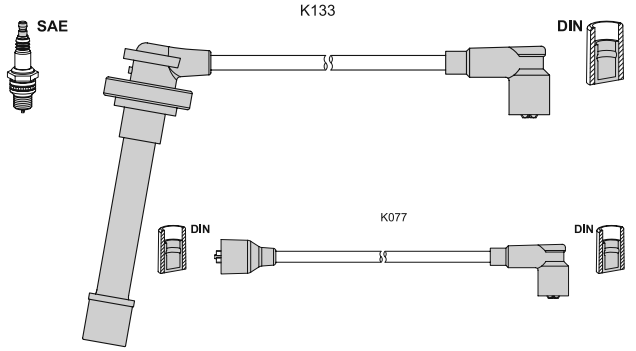

Nissan Serena 1.6 16V	02.93 - 09.01	71	GA16DE
Vanette Cargo Bus 1.6i	01.96 -	72	GA16DE
Vanette Cargo Van 1.6i	01.95 -	71	GA16DE

T352B K196 32 35 50 54 K079 63

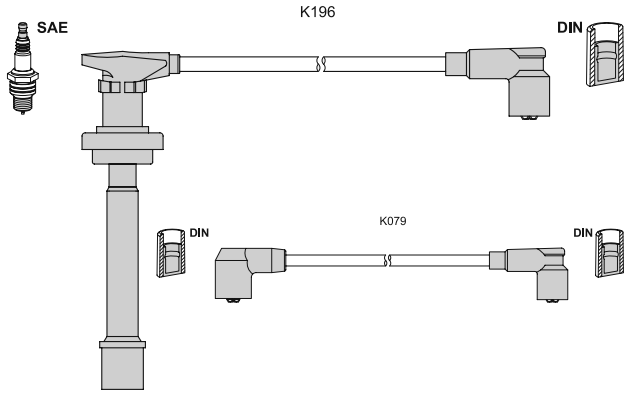

Nissan Serena 2.0 16V	11.92 - 09.01	93	SR20DE
2.0 SGX	09.00 - 09.05	107	SR20DE
2.0 SGX 4x4	09.00 - 09.05	107	SR20DE

T353C K504 70 88 97 K470 32 48 60 K100 27

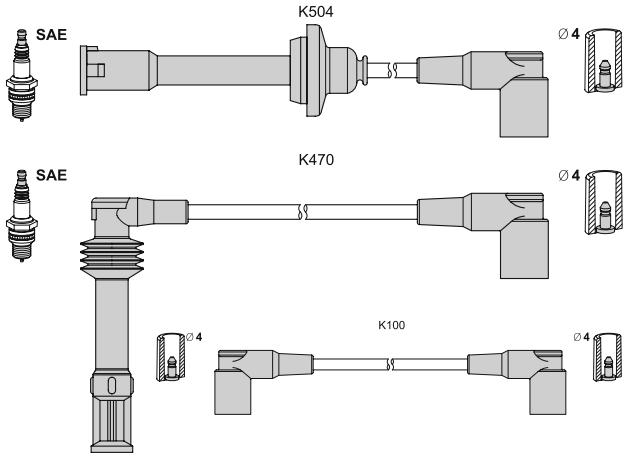

Alfa Romeo 164 3.0 V6	09.92 - 09.98	132	AR 66303/AR 64305
3.0 V6	06.87 - 09.92	135	AR 06412
3.0 V6 (164.A)	06.87 - 09.92	141	AR 06410
3.0 i.e. QV (164.AG)	09.90 - 09.92	147	AR 64301/AR 06430

T354H K481 42 29 28 29 -

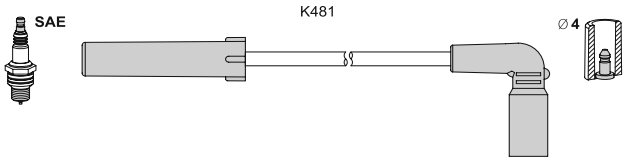

application → T417S

T355S K010 40 45 45 55 K075 60

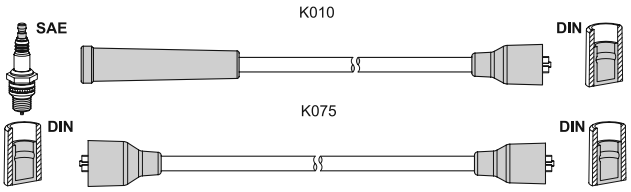

IZH 2126 1.6	01.97 - 12.99	56	VAZ 2106
2126 Oda 1.6	01.00 - 07.05	56	VAZ 2106
21261 Fabula 1.6	06.04 - 01.06	56	VAZ 2106
21171 1.6	01.98 - 01.04	56	VAZ 2106
21175 1.6 carb	12.05 - 09.12	56	VAZ 2106
VAZ 2101 Zhiguli 1.2	70 - 83	43	VAZ 2101
21011Zhiguli 1.3	74 - 81	47	VAZ 21011
21013 Zhiguli 1.2	70 - 86	52	VAZ 2103
2102 Zhiguli 1.2	71 - 79	43	VAZ 2101
21021 Zhiguli 1.3	78 - 81	47	VAZ 21011
2103 Zhiguli 1.5	72 - 81	43	VAZ 2101
21033 Zhiguli 1.3	77 - 83	47	VAZ 21011
21035 Zhiguli 1.2	72 - 84	52	VAZ 2103
Lada 2104 1.3	85 - 88	43	VAZ 2101
21041 Lada 1.2	84 - 89	50	VAZ 2105
21043 Lada 1.5	85 - 01	52	VAZ 2103
2105 Lada 1.3	81 - 01	43	VAZ 2101
21051 Lada 1.2	80 - 89	50	VAZ 2105
21053 Lada 1.5	76 - 01	52	VAZ 2103
2106 Lada 1.6	76 - 99	47	VAZ 21011
21061 Lada 1.5	76 - 01	52	VAZ 2103
21063 Lada 1.3	75 - 06	56	VAZ 2106
2107 Lada 1.5	83 - 99	47	VAZ 21011
21072 Lada 1.3	82 - 06	52	VAZ 2103
21074 Lada 1.6	83 - 08	56	VAZ 2106

T356S K012 50 55 65 70 K079 30

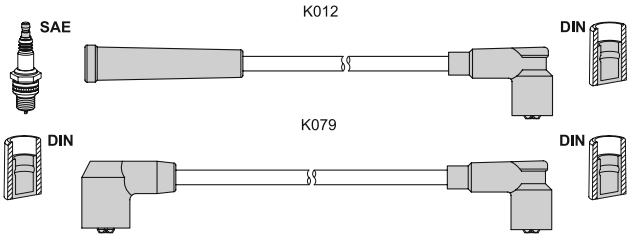

Lada 110 1.5	96 - 02	54	VAZ 2110
2111 Lada 111 1.5	97 - 00	54	VAZ 2110
2108, -083 Samara 1.1	84 - 98	40	VAZ 21081
1.3	84 - 98	49	VAZ 2108
1.5	88 - 02	51	VAZ 21083
2109, -093 Samara 1.1	87 - 99	40	VAZ 21081
1.3	87 - 99	49	VAZ 2108
1.5	87 - 03	51	VAZ 21083
21099 Samara 1.3	90 - 99	49	VAZ 2108
1.5	90 - 03	51	VAZ 21083

T357S K010 30 50 60 70 K075 80

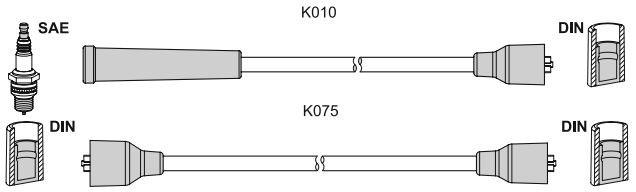

AZLK 2141 Aleko 1.5	08.87 - 06.95	55	UZAM 331.10
1.7	06.95 - 12.01	63	UZAM 3317
2141 J. Dolgorukij 1.8	11.97 - 12.01	63	UZAM 3318
2141 Svjatogor 1.8	11.97 - 12.01	63	UZAM 3318
2335, 2901 Pick Up 1.7	01.92 - 12.01	63	UZAM 3317.10
1.8	01.92 - 12.01	63	UZAM 3318
IZH 2126 1.7	01.95 - 12.99	63	UZAM 3317.10
2126 Oda 1.7	01.00 - 07.05	63	UZAM 3317.10
21261 Fabula 1.7	06.04 - 01.06	63	UZAM 3317.10
2717 1.7	01.97 - 07.05	63	UZAM 3317.10
27171 1.7	01.98 - 01.04	63	UZAM 3317.10

T358S K010 45 35 30 30 K075 40

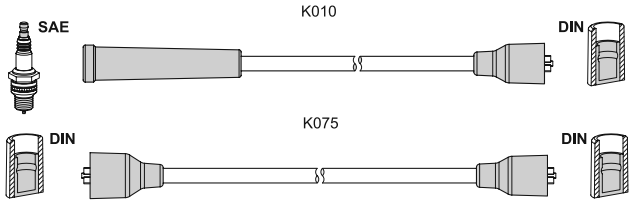

GAZ 24 Volga 2.4	70 - 85	70	ZMZ 24D
2401 Volga 2.4	70 - 85	63	ZMZ 2401
2402 Volga 2.4	70 - 85	70	ZMZ 24D
2410 Volga 2.4	85 - 92	73	ZMZ 402
2411 Volga 2.4	85 - 92	66	ZMZ 4021
2412 Volga 2.4	85 - 92	73	ZMZ 402
2705 Gazelle 2.4	10.93 - 08.01	73	ZMZ 4026
2.9	10.93 - 08.01	70	UMZ 4215
3102 Volga 2.4	80 - 09	73	ZMZ 402
2.4	80 - 09	66	ZMZ 4021
310221 Volga 2.4	85 - 92	73	ZMZ 402
2.4	85 - 92	66	ZMZ 4021
31029 Volga 2.4	92 - 97	73	ZMZ 402
3110 Volga 2.4	97 - 09	73	ZMZ 402
2.4	97 - 09	66	ZMZ 4021
3221 Gazelle 2.4	10.93 - 08.01	73	ZMZ 4026
2.9	10.93 - 08.01	70	UMZ 4215
3302 Gazelle 2.4	10.93 - 08.01	73	ZMZ 4026
2.9	10.93 - 08.01	70	UMZ 4215
2217 Sobol 2.4	09.97 - 04.06	73	ZMZ 4026
UAZ 2206 2.5	12.89 -	67	UMZ 4178
2.9	12.85 -	66	UMZ 4218
31512 2.5	12.89 - 12.11	67	UMZ 4178
2.9	12.85 - 12.11	66	UMZ 4218
31514 2.9	12.93 - 12.11	66	UMZ 4218
3152 2.5	01.98 -	67	UMZ 4178
3153 2.9	96 - 10	66	UMZ 4218
3303 2.5	12.89 -	67	UMZ 4178
2.9	12.85 -	66	UMZ 4218
3741 2.5	12.89 -	67	UMZ 4178
2.9	12.85 -	66	UMZ 4218
3909 2.5	12.89 -	67	UMZ 4178
2.9	12.85 -	66	UMZ 4218
3962 2.5	12.89 -	67	UMZ 4178
2.9	12.85 -	66	UMZ 4218
469B 2.5	12.72 - 12.85	55	UMZ451

T359S K010 40 45 45 50 K075 80

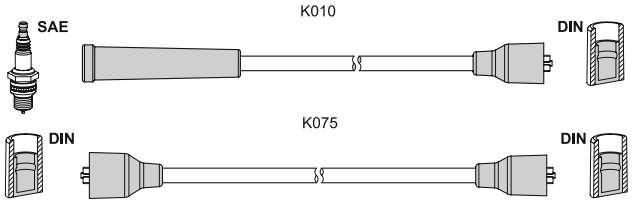

AZLK 2141 Aleko 1.6	11.97 - 12.01	56	VAZ 2106
2141 Svjatogor 1.6	11.97 - 12.01	56	VAZ 2106
2141 J. Dolgorukij 1.8	11.97 - 12.01	60	VAZ 2130
2335 Pick-Up 1.6	01.92 - 12.01	56	VAZ 2106
2901 Pick-Up 1.6	01.92 - 12.01	56	VAZ 2106
Lada 2121 Niva 1.6	77 - 94	53	VAZ 2121
21214 Niva 1.6	77 - 94	53	VAZ 2121
Lada 4x4 1.6	77 - 94	53	VAZ 2121

T360B K558 50 37 26 24 -

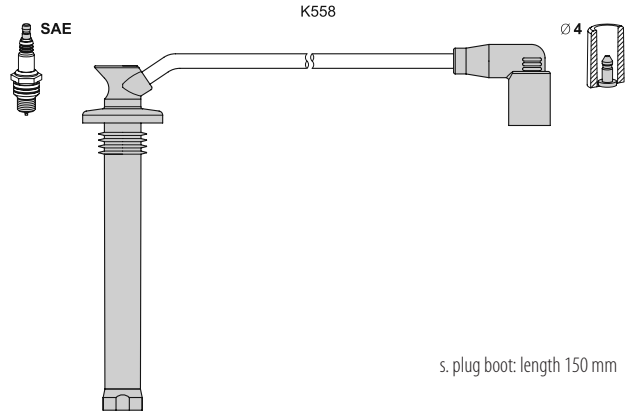

s. plug boot: length 150 mm

Chery Amulet FL /A15FL/ 1.5	10 -	80	SQR477F
Bonus /A13/ 1.5	08 -	80	SQR477F
Tiggo /T11/ 1.8i 16V	04.10 - 12.14	97	SQR481FC
Tiggo FL 1.8i 16V	08.13 - 11.16	97	SQR481FC
Very /A13/ 1.5	08 -	80	SQR477F
Tagaz Vortex Corda 1.5	03.10 - 08.12	81	SQR477F
Estina FL-C 1.5i 16V	09.12 - 01.14	80	SQR477F
Tingo 1.8i 16V	07.10 - 05.12	97	SQR481FC
Tingo FL 1.8i 16V	05.12 - 01.14	97	SQR481FC
ZAZ Forza 1.5i 16V	05.11 - 11.16	80	SQR477F
Vida 1.5i 16V	04.13 -	80	SQR477F

T363B K471 38 45 45 88 90 100 K416 70

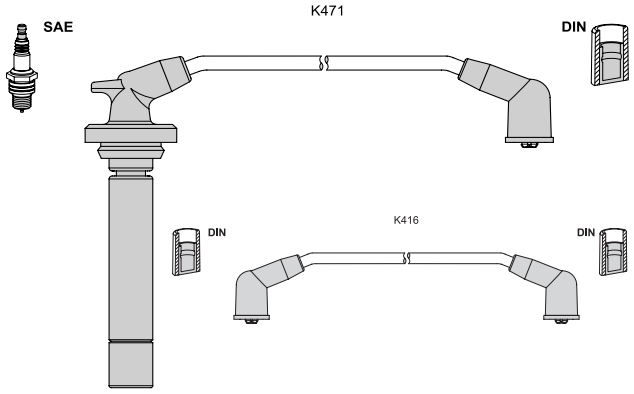

Rover 827 SI/Sterling (XS) 2.7	02.88 - 02.99	124	C 27 A1
827 Coupé (RS) 2.7 24V	08.92 - 02.99	124	C 27 A1
827 I/SI (RS) 2.7 24V	01.92 - 02.99	124	C 27 A1
827 Vitesse (XS) 2.7 Cat	10.88 - 12.91	124	C 27 A1

T 364B ▶

T364B K071 55 47 35 26 K062 35

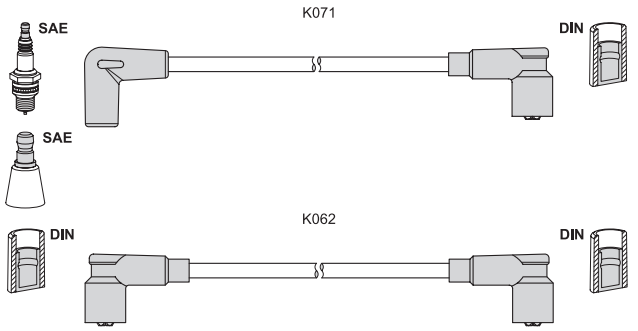

Rover Montego 2.0 i cat	12.90 - 10.94	75	20 H
Montego Est. 2.0 GTI/LXI	12.90 - 12.93	75	20 H

T365C K519 40 42 63 + + + -

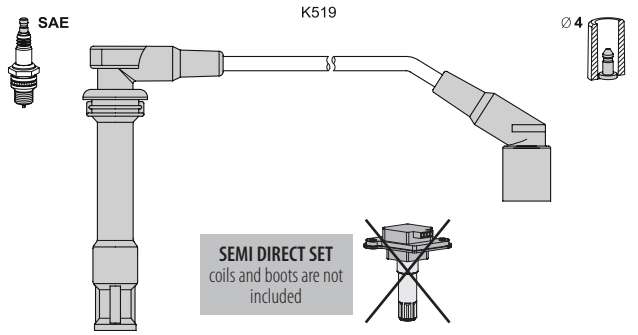

Landrover Freelander 2.5 V6	11.00 - 10.06	130	25 K4F
MG MG ZS 180 2.5 V6	07.01 - 04.05	130	25 K4F
2.5 V6 Hatchback	07.01 - 10.05	130	25 K4F
MG ZT 180 2.5 V6	01.03 - 07.05	130	25 K4F
MG ZT-T 180 2.5 V6	01.03 - 07.05	130	25 K4F
Rover 45 (RT) 2.0 V6	02.00 - 05.05	110	20 K4F
2.0 V6 Sedan	02.00 - 05.05	110	20 K4F
75 (RJ) 2.0 V6	02.99 - 05.05	110	20 K4F
2.5 V6	02.99 - 10.01	129	KV 6
2.5 V6	10.01 - 05.05	130	25 K4F
75 Tourer (RJ) 2.0 V6	08.01 - 05.05	110	20 K4F
2.5 V6	08.01 - 05.05	130	KV 6

T366B K527 21 19 19 21 -

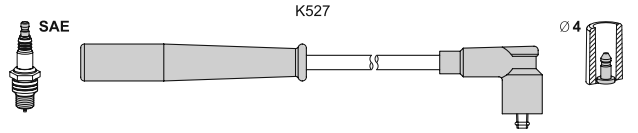

Rover Mini MK I 1.3	10.96 - 11.00	46	12 A2E/12 A2L

T367S K012 30 35 40 45 K077 40

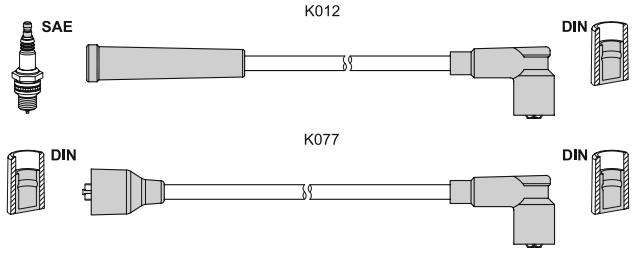

LuAZ 1301 1.1	01.89 -	38	MeMZ 245
1302 1.2	-	42	MeMZ 2457

< T367S

ZAZ Dana (1105) 1.1	01.94 - 01.97	38	MeMZ-245
1.2	01.94 - 01.97	43	MeMZ-2457
Slavuta (1103) 1.1	03.99 - 01.01	38	MeMZ-245
1.2	01.00 - 07.06	43	MeMZ-2457
1.3	01.01 - 07.06	46	MeMZ-301
Tavria (1102) 1.1	01.87 - 09.08	38	MeMZ-245
1.1	01.87 - 09.08	35	MeMZ-2451
1.2	01.91 - 09.08	43	MeMZ-2457

T368S K012 30 40 50 40 K062 40

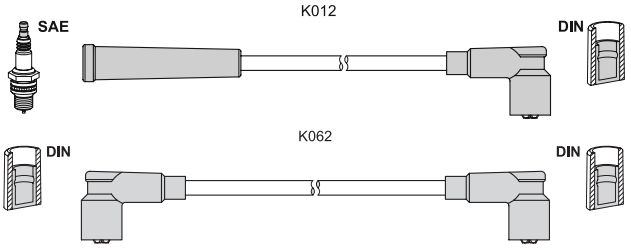

Skoda 135 Favorit 1.3 carb	- 12.92	43	781.135
136 Favorit (781) 1.3 carb	- 12.92	46	781.136
135 Forman (785) 1.3 carb	- 12.92	43	781.135
136 Forman (785) 1.3 carb	- 12.92	46	781.136
Praktik, Pick-up 1.3 carb	- 12.92	43	781.135
Praktik, Pick-up 1.3 carb	- 12.92	46	781.136

T369S K010 30 40 50 60 K060 45

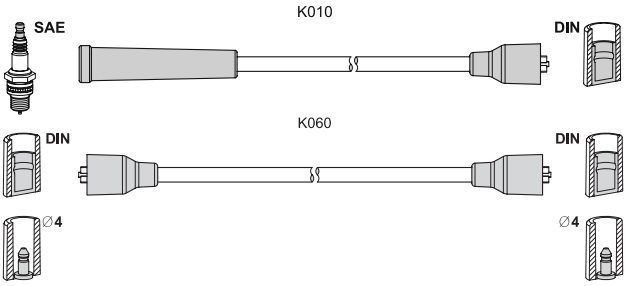

Skoda 1000 MB 1.0	09.64 - 01.70	27	
1.0	03.66 - 01.70	32	
1000 MBX 1.0	01.69 - 01.70	34	
1.1	01.69 - 01.70	34	
100 1.0	01.70 - 12.77	29	OHV
1.0	01.70 - 12.77	31	OHV
110L 1.1	12.69 - 03.82	33	
1.1	12.69 - 03.82	35	
110LS 1.1	07.70 - 03.82	38	
110R Coupe 1.1	07.70 - 03.82	38	
105S, L 1.05	08.76 - 08.83	33	742.10
1.05	08.76 - 12.90	34	742.10
1.05	02.88 - 12.90	32	742.10
105S, L, LS 1.05	10.83 - 12.90	33	742.10
120L 1.2	08.76 - 12.90	38	
1.2	10.83 - 12.90	38	742.12
1.2	08.87 - 12.90	35	742.12
120LS 1.2	08.76 - 12.90	43	742.12 X
120GLS 1.2	02.83 - 12.90	43	
120G Rapid 1.2	02.83 - 12.90	43	
130GL 1.3	08.87 - 10.91	39	
1.3	05.88 - 10.91	43	135/8
130L, GL 1.3	02.85 - 10.91	45	742.13
130G, GL 1.3	05.88 - 10.91	46	
130G Rapid 1.3	08.87 - 10.91	39	
1.3	03.85 - 08.88	45	742.13
135GL Rapid 1.3	09.84 - 12.90	43	135/8

T370B K531 25 25 31 44 -

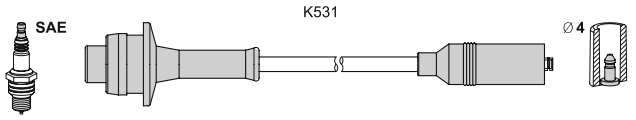

Great Wall Deer G1 2.2i Euro2	04 -	78	491QE
Deer G2 2.2i Euro2	04 -	78	491QE
Deer G3 2.2i Euro2	04 -	78	491QE
Deer G4 2.2i Euro2	04 -	78	491QE
Deer G5 2.2i Euro2	04 -	78	491QE
Pegasus 2.2i Euro2	04 -	78	491QE
RUV Sing 2.2i Euro2	04 -	78	491QE
Safe 2.2i Euro2	04 - 10	78	491QE
Sailor 2.2i Euro2	04 -	78	491QE
Socool C3 2.2i Euro2	04 -	78	491QE

T371S K012 25 40 50 35 K064 30

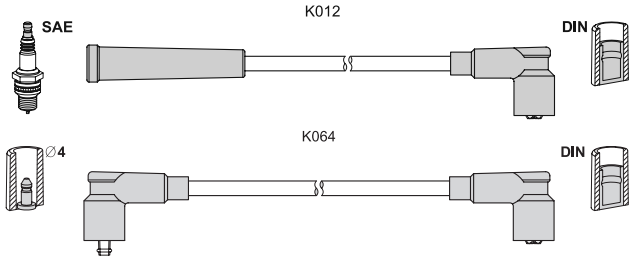

Skoda 135 Favorit 1.3i (SPI)	01.93 - 06.95	40	135 BMM
1.3i (SPI)	01.93 - 06.95	50	136 BMM
135 Forman 1.3i (SPI)	01.93 - 06.95	40	135 BMM
1.3i (SPI)	01.93 - 06.95	50	136 BMM
Praktik, Pick-up 1.3i (SPI)	01.93 - 09.94	40	135B
1.3i (SPI)	01.93 - 09.94	50	136B

T372S K011 25 35 40 50 K065 30

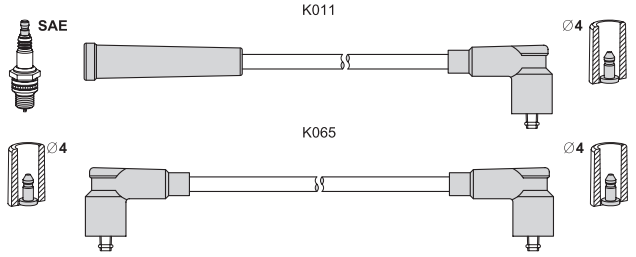

Skoda Felicia I (6U1) 1.3i (SPI)	10.94 - 03.98	40	135B/AMG
1.3i (SPI)	10.94 - 03.98	50	136B/AMH
Felicia I Combi 1.3i (SPI)	08.95 - 03.98	40	135B/AMG
1.3i (SPI)	08.95 - 03.98	50	136B/AMH
Felicia I Pick Up 1.3i (SPI)	06.97 - 04.02	40	135B/135M
1.3i (SPI)	06.97 - 04.02	50	136B/136M

T373B K220 75 70 55 50 K061 30

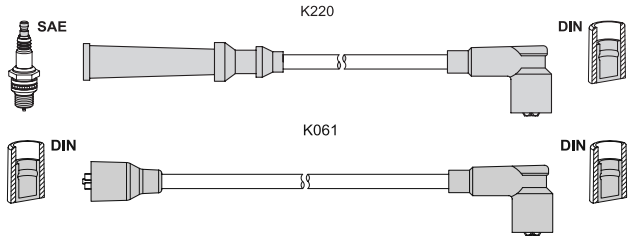

Saab 900 I 2.0 c	07.82 - 12.88	74	B201XC/B 20
2.0 c	11.80 - 08.84	79	B20T/BT 20
2.0 i	09.85 - 08.90	81	B201
2.0 i	11.80 - 08.90	85	BI 20/B201XI

< T373B

Saab 900 I 2.0 Turbo	10.86 - 12.91	103	B201XL
900 I Combi-Coupe 2.0 c	09.79 - 12.88	74	B201XC/B 20
2.0 c	09.78 - 08.84	79	B20T/BT 20
2.0 i	09.85 - 08.90	81	B201
2.0 i	11.80 - 12.88	85	BI 20/B201XI
2.0 Turbo	10.86 - 12.91	103	B201XL
2.0 Turbo	01.86 - 12.88	110	B201XL

T374B K012 60 60 80 80 K061 50

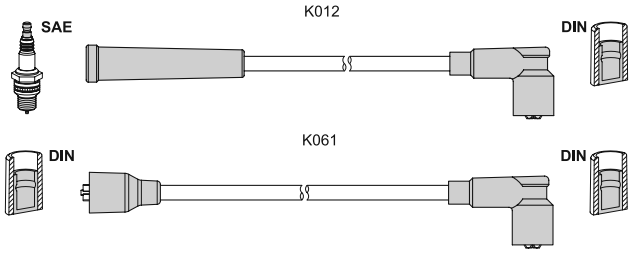

Saab 900 I 2.0 Turbo	10.80 - 07.85	107	B201S/BSI 20
900 I Combi-Coupe 2.0 T	09.78 - 07.85	107	B201S/BSI 20

T378B K025 70 70 70 80 K073 95

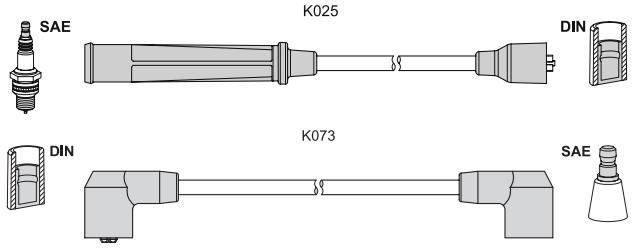

Volvo 240 (P242, P244) 2.0	08.84 - 07.85	76	B 200 K
240 Combi (P245) 2.0	08.84 - 07.85	76	B 200 K
340-360 (343, 345) 2.0	08.80 - 07.83	70	B 19 A/B 200 K
2.0	08.84 - 07.87	77	B 200 K
2.0	08.88 - 07.89	80	B 200 F
2.0	08.87 - 07.88	81	B 200 F
2.0	08.86 - 07.88	82	B 200 E/B 200 F
340-360 Sedan 2.0	08.84 - 07.90	75	B 200 K
2.0	08.84 - 07.87	77	B 200 K
2.0	08.88 - 07.89	80	B 200 F
2.0	08.86 - 07.88	82	B 200 EA
2.0	08.84 - 07.86	85	B 200 E
2.0	08.84 - 07.86	87	B 200 E

T379B K532 53 46 34 22 -

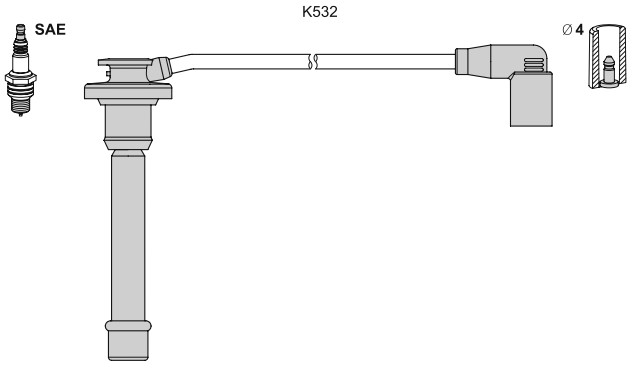

Geely CK 1.5	05 - 09	69	MR479QA
CK - 2 1.5	10 -	69	MR479QA
MK I 1.5	06 -	69	MR479QA
MK II 1.5	09 -	69	MR479QA

T 379B ▶

< T379B				
Geely MK Cross 1.5	10 -		69	MR479QA
Otaka 1.5	05 - 09		69	MR479QA

T380B K026 70 70 70 80 K062 60

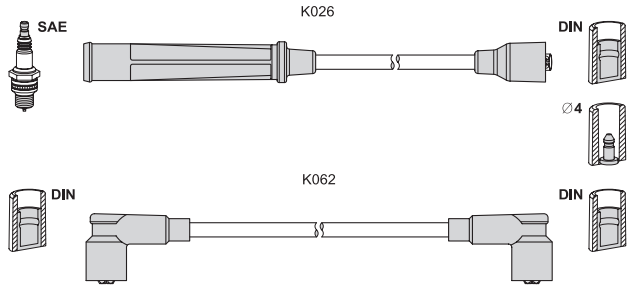

Volvo 240 2.0	08.76 - 07.79	66	B 19 A
2.0	09.78 - 08.83	71	B 19 A/B 19 K
2.0	08.84 - 07.85	76	B 200 K
2.0	10.82 - 08.84	100	B 19 ET
2.1	08.74 - 07.75	71	B 21 A
2.1	08.75 - 07.80	74	B 21 A
2.1	08.80 - 07.84	79	B 21 A
2.1	08.74 - 07.80	90	B 21 E
2.1 Turbo	08.80 - 07.84	114	B 21 ET
2.3	08.84 - 07.86	81	B 230 A
2.3	08.80 - 07.84	82	B 23 A
2.3	08.86 - 07.87	83	B 230 F
2.3	08.83 - 07.85	96	B 230 E
2.3	08.84 - 12.89	98	B 23 E
2.3	08.80 - 07.83	100	B 23 E/B 230 FX
240 Combi 2.0	08.80 - 12.84	71	B 19 A/B 19 K
2.0	08.76 - 01.82	66	B 19 A
2.0	08.84 - 07.85	76	B 200 K
2.0	08.83 - 07.93	86	B 200 E
2.0	10.82 - 08.84	100	B 19 ET
2.1	08.74 - 07.75	71	B 21 A
2.1	08.75 - 07.80	74	B 21 A
2.1	08.80 - 07.84	79	B 21 A
2.1	08.80 - 07.84	80	B 21 F
2.1	08.74 - 07.79	90	B 21 E
2.1 Turbo	08.80 - 07.85	114	B 21 ET
2.3	08.84 - 07.86	81	B 230 A
2.3	08.80 - 07.84	82	B 23 A
2.3	08.86 - 07.87	83	B 230 F
2.3	08.84 - 07.85	96	B 230 E
2.3	08.84 - 12.88	98	B 23 E
2.3	01.83 - 12.84	100	B 23 E
340-360 2.0	08.80 - 07.84	65	B 19 A
2.0	08.83 - 07.84	68	B 19 A
2.0	08.80 - 07.83	70	B 19 A/B 200 K
2.0	08.84 - 07.87	77	B 200 K
2.0	08.88 - 07.89	80	B 200 F
2.0	08.87 - 07.88	81	B 200 F
2.0	08.86 - 07.88	82	B 200 E/B 200 F
2.0	08.82 - 07.84	83	B 19 E
2.0	08.82 - 07.84	85	B 19 E
2.0	08.84 - 07.86	87	B 200 E
340-360 Sedan 2.0	08.82 - 07.84	66	B 19 A
2.0	08.83 - 07.84	68	B 19 A
2.0	08.84 - 07.90	75	B 200 K
2.0	08.84 - 07.87	77	B 200 K
2.0	08.88 - 07.89	80	B 200 F
2.0	08.86 - 07.88	82	B 200 EA
2.0	08.83 - 07.84	83	B 19 E
2.0	08.84 - 07.86	85	B 200 E

< T380B			
Volvo 340-360 Sedan 2.0	08.84 - 07.86	87	B 200 E
740 2.3	08.83 - 07.84	95	B 23 E
760 2.3 Turbo	08.82 - 07.84	127	B 23 ET

T381B K452 35 45 55 35 55 60 K062 60

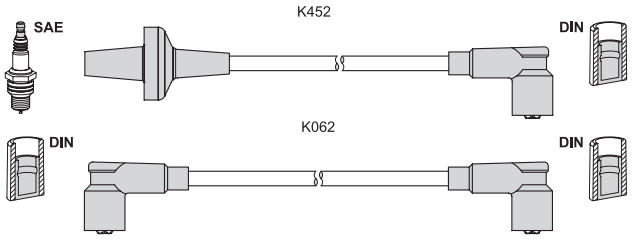

Volvo 260 2.7	08.76 - 07.82	92	B 27 A
2.7	08.74 - 07.80	103	B 27 E
2.7	08.78 - 07.82	109	B 27 E
2.8	08.80 - 07.82	95	B 28 A
2.8	08.80 - 07.82	114	B 28 E
260 Combi 2.7	08.75 - 07.77	92	B 27 A
2.7	07.75 - 07.82	103	B 27 E
2.7	10.78 - 07.82	109	B 27 F
2.8	08.80 - 07.82	114	B 28 F
760 2.8	01.82 - 12.87	95	B 28 A
2.8	08.81 - 07.88	115	B 280 E/B 28 E
760 Combi 2.8	05.86 - 12.87	95	B 28 A
2.8	08.86 - 08.90	115	B 280 E/B 28 E

T382B K122 30 30 + + -

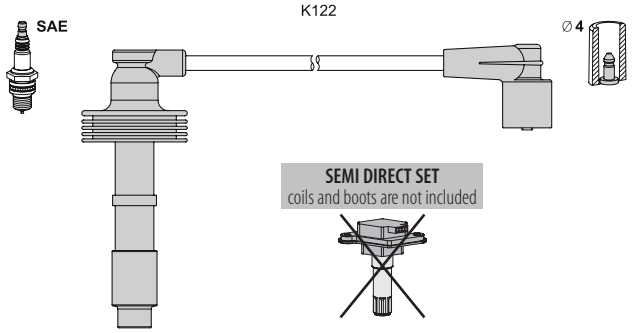

Volvo S40 I (VS) 1.6	03.99 - 12.03	80	B 4164 S2
1.8	07.95 - 08.99	85	B 4184 S3/B 4184 S
1.8	03.99 - 12.03	90	B 4184 S2/B 4184 S9
1.8 i	06.01 - 12.03	90	B 4184 SJ
1.9 T4	05.97 - 07.00	147	B 4194 T/B 4194 T2
2.0	07.95 - 12.03	100	B 4204 S2/B 4204 S
2.0 T	10.97 - 07.00	118	B 4204 T
2.0 T	06.01 - 12.03	120	B 4204 T3
2.0 T	07.00 - 06.01	121	B 4204 T2/B 4204 T3
2.0 T4	07.00 - 12.03	147	B 4204 T5
V40 Combi (VW) 1.6	03.99 - 06.04	80	B 4164 S2
1.8	07.95 - 08.99	85	B 4184 S3/B 4184 S
1.8	03.99 - 06.04	90	B 4184 S2/B 4184 S9
1.9 T4	05.97 - 07.00	147	B 4194 T
2.0	07.95 - 06.04	100	B 4204 S2/B 4204 S
2.0 T	10.97 - 07.00	118	B 4204 T
2.0 T	07.99 - 06.01	121	B 4204 T2
2.0 T	06.01 - 06.04	120	B 4204 T3
2.0 T4	07.00 - 06.04	147	B 4204 T5

T383B K529 56 36 30 37 -

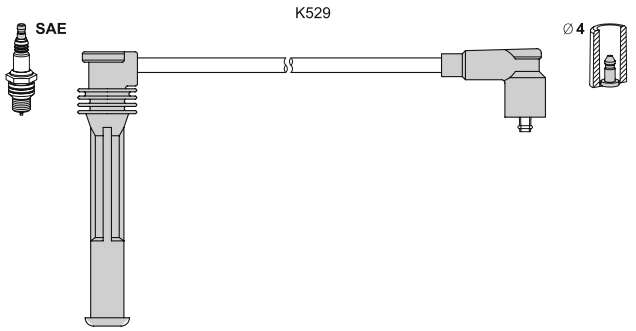

Renault Clio II 2.0 16V Sport	02.00 -	124	F4R 730
2.0 16V Sport	01.04 -	132	F4R 738

T385B K133 40 46 57 62 -

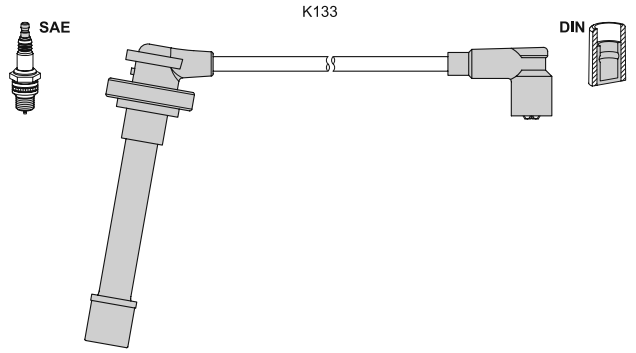

Nissan Micra (K11) 1.0 i 16V	08.92 - 09.00	40	CG10DE
1.3 i 16V	08.92 - 09.00	55	CG13DE
1.4 i 16V	09.00 - 02.03	60	CGA3DE

T386B K424 65 50 K308 45 32 K439 35

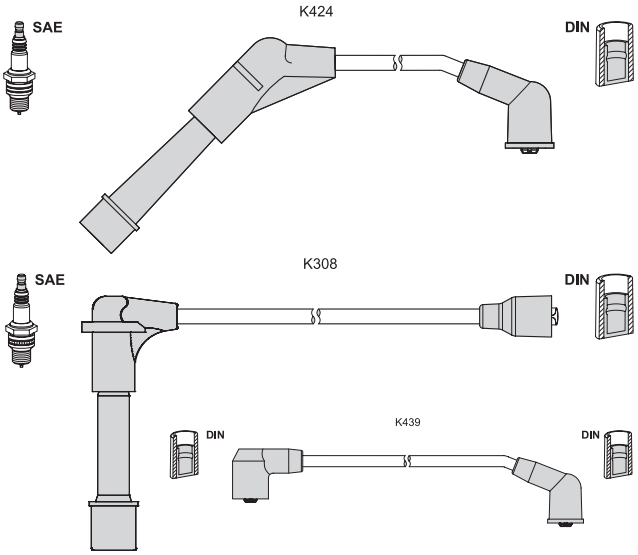

Nissan Sunny II 1.6 GTI 16V	02.87 - 10.88	81	CA16D
1.6 i 12V	10.88 - 06.91	66	GA16i
Sunny II Coupe 1.6 i 12V	10.88 - 06.91	66	GA16i
Sunny II Hatch. 1.6 GTI 16V	06.87 - 05.89	81	CA16D
1.6 i 12V	06.86 - 10.90	66	GA16i
Sunny II Traveller 1.6 i 12V	10.88 - 06.91	66	GA16i

T387C K403 75 63 50 43 - alternative T098B

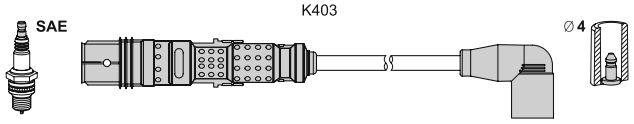

Seat Cordoba (6L2) 1.6	04.03 - 11.09	74	BAH
Ibiza IV (6L1) 1.6	02.03 - 11.09	74	BAH
VW Fox (5Z1) 1.4	04.05 -	55	BKR
Polo 1.6 (9N_)	08.02 - 05.05	74	BAH
Polo Sedan (9A4)	09.02 -	74	BPA/CFZA/BAH

T389C K083 47 51 61 65 65 70 70 75 - alternative T021B

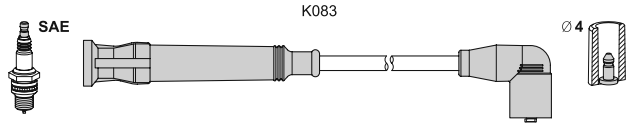

Alfa Romeo 155 1.7 T.S. 16V	05.96 - 12.97	103	AR 67106
164 (164) 2.0 T.S.	09.92 - 09.98	106	AR 64103

T390C K604 49 53 55 66 71 74 74 83 89 91 96 106 K444 63 63 alternative T024B

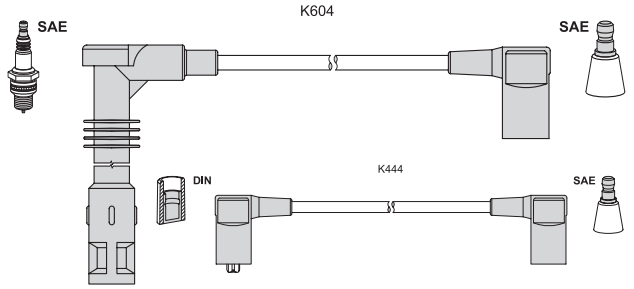

Mercedes 600 (W140) 6.0	04.91 - 12.92	300	M 120.982/_.980
S 600 (W140) 6.0	01.93 - 10.98	290	M 120.982/_.980
S 600 (C140) Coupe 6.0	09.92 - 02.99	290	M 120.982/_.980
SL 600 (R129)	07.92 - 10.01	290	M 120.981

T391C K592 45 45 65 65 K444 50 alternative T005B

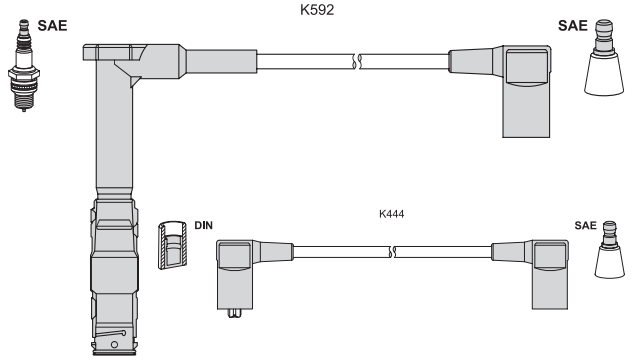

Mercedes 190 (W201) E 2.3-16	09.85 - 12.87	125	M 102.983
E 2.3-16	09.85 - 08.88	130	M 102.983
E 2.3-16	04.84 - 01.87	136	M 102.983
E 2.5-16	03.89 - 08.93	143	M 102.991
E 2.5-16	09.88 - 08.93	150	M 102.990
E 2.5 Evolution II	05.90 - 08.93	173	M 102.992

T 393B ▶

T393B K450 31 49 56 65 -

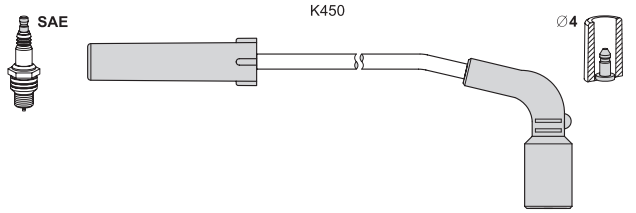

ZAZ Chance 1.3i 8V	07.09 - 06.14	49	MeMZ-307
Sens 1.3 i	01.01 -	49	MeMZ-307
1.4 i 8V	01.07 -	56	MeMZ-317
Sens Hatchback 1.3i	01.12 -	49	MeMZ-307
1.4 i 8V	01.12 -	56	MeMZ-317

T394S K024 30 35 35 50 -

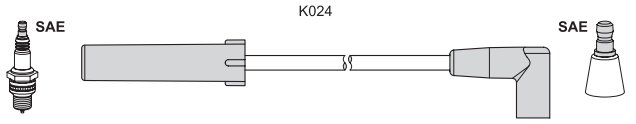

Lada 2120 Nadezhda 1.7i 8V SPI	98 - 99	59	VAZ 21214
2121 Niva 1.7i 8V SPI	95 - 00	58	VAZ 21214
21214 Niva 1.7i 8V SPI	95 - 00	58	VAZ 21214
2131 Niva 1.7i 8V SPI	95 -	58	VAZ 21214
Lada 4x4 1.7i 8V SPI	95 - 00	58	VAZ 21214

T395S K023 37 40 50 60 -

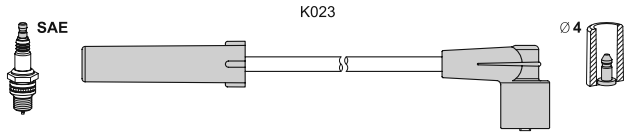

Datsun mi-DO	08.14 -	64	VAZ 11186
on-DO	08.14 -	60	VAZ 11186
on-DO	08.14 -	64	VAZ 11186
Lada 1117 Kalina Combi 1.6i 8V	09.07 - 08.13	58	VAZ 11183
1.6i 8V	09.07 - 08.13	60	VAZ 21114
1118 Kalina Sedan 1.6i 8V	11.04 - 11.13	58	VAZ 11183
1.6i 8V	11.04 - 11.13	60	VAZ 21114
1119 Kalina Hatch. 1.6i 8V	12.06 - 02.13	58	VAZ 11183
1.6i 8V	12.06 - 02.13	60	VAZ 21114
2108, -083 Samara 1.5i 8V	93 - 02	57	VAZ 2111
2109, -093 Samara 1.5i 8V	94 - 04	57	VAZ 2111
21099 Samara 1.5i 8V	96 - 06.04	57	VAZ 2111
2110 Lada 110 1.5i 8V	06.95 - 10.07	57	VAZ 2111
1.6i 8V	01.00 - 10.07	60	VAZ 21114
2111 Lada 111 1.5i 8V	06.98 - 02.09	57	VAZ 2111
1.6i 8V	06.98 - 02.09	60	VAZ 21114
2112 Lada 112 1.5i 8V	06.99 - 02.09	57	VAZ 2111
1.6i 8V	06.99 - 02.09	60	VAZ 21114
2113 Samara 2 1.5i 8V	09.04 - 09.07	57	VAZ 2111
1.6i 8V	09.07 - 02.10	58	VAZ 11183
2114 Samara 2 1.5i 8V	10.01 - 08.07	57	VAZ 2111
1.6i 8V	09.07 - 12.13	60	VAZ 21114
2115 Samara 2 1.5i 8V	03.97 - 03.12	57	VAZ 2111
1.6i 8V	03.97 - 03.12	58	VAZ 11183
1.6i 8V	03.97 - 03.12	60	VAZ 21114
2170 Priora Sedan 1.6i 8V	03.07 - 11.11	60	VAZ 21114
1.6i 8V	12.11 -	66	VAZ 21116
2172 Priora Hatch. 1.6i 8V	02.08 - 11.11	60	VAZ 21114
1.6i 8V	03.07 - 08.14	66	VAZ 21116
2190 Granta Sedan 1.6i 8V	10.11 -	60	VAZ 11183
1.6i 8V	10.11 -	64	VAZ 11186
1.6i 8V	07.13 -	66	VAZ 21116
2191 Granta Liftback 1.6i 8V	05.14 -	64	VAZ 11186

< T395S

Lada 2191 Granta Liftback 1.6i 8V	05.14 -	66	VAZ 21116
2192 Kalina 2 Hatch. 1.6i 8V	05.13 -	64	VAZ 11186
2194 Kalina 2 Combi 1.6i 8V	09.13 -	64	VAZ 11186
Kalina Cross 1.6i 8V	09.14 -	64	VAZ 11186
Largus Combi 1.6i 8V	11.15 -	64	VAZ 11189
Largus Furgon 1.6i 8V	11.15 -	64	VAZ 11189
ZAZ Lanos Pick Up 1.3 i	01.05 -	49	MeMZ-307
Slavuta 1.2 i	01.06 - 01.11	46	MeMZ-2477
1.3 i	07.06 - 01.11	49	MeMZ-307
Tavria 1.2 i	01.98 - 09.08	46	MeMZ-2477

T396P K437 36 64 K432 45 69 87 97 K438 43

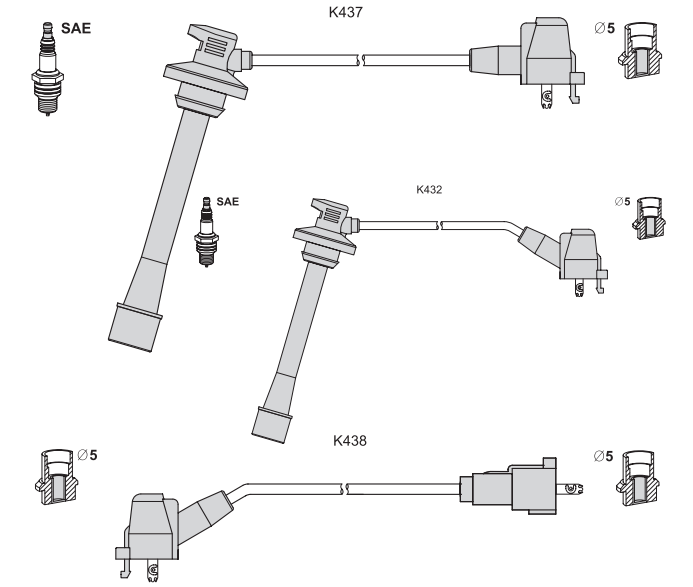

Toyota Land Cruiser 80 4.5 24V	08.92 - 12.97	151	1FZ-FE

T398P K448 21 22 84 85 91 94 56 57 K449 25 32

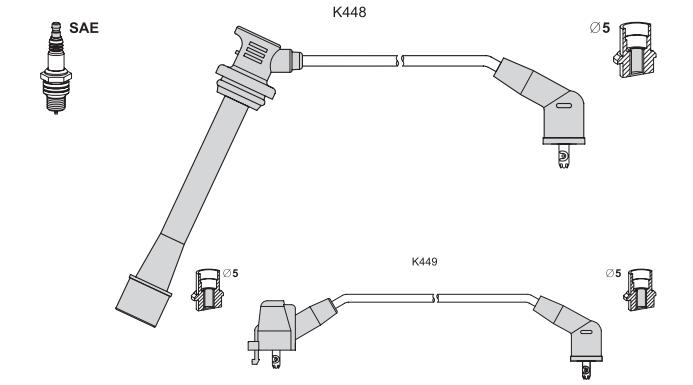

Lexus LS 400 (UCF10) 4.0	12.89 - 12.94	180	1UZ-FE
LS 400 (UCF20) 4.0	12.94 - 08.97	194	1UZ-FE
4.0	09.97 - 10.00	209	1UZ-FE
4.0	09.98 - 10.00	203	1UZ-FE

T399P K455 34 36 45 68 -

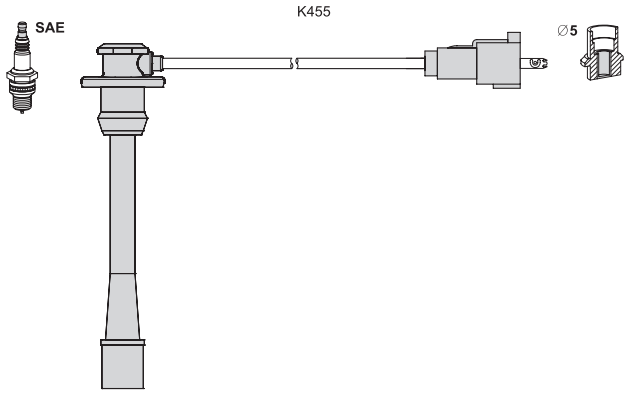

Toyota Hiace IV Bus 2.7	04.98 - 08.01	105	3RZ-FE
2.7	11.01 - 08.06	106	3RZ-FE
2.7 4WD	04.98 - 08.01	105	3RZ-FE
Hiace IV Van 2.7	04.98 - 08.01	105	3RZ-FE
2.7 4WD	04.98 - 08.01	106	3RZ-FE
Hilux Pick Up 2.4i 4WD	08.97 - 07.05	103	2RZ-FE

T400P K155 36 46 56 63 -

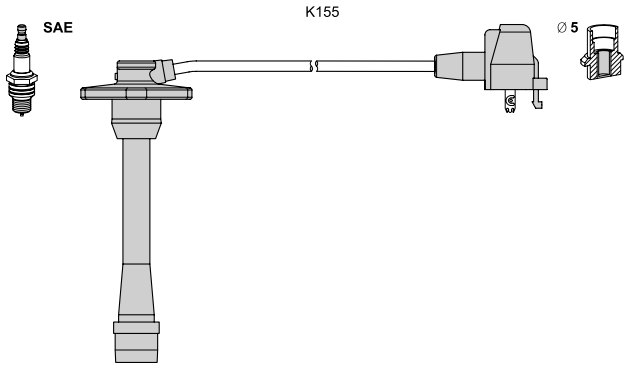

Toyota Paseo Coupé 1.5 16V	10.96 - 03.99	66	5E-FE
Paseo Cabrio (EL54) 1.5 16V	08.95 - 07.99	66	5E-FE

T401P K156 37 43 51 59 -

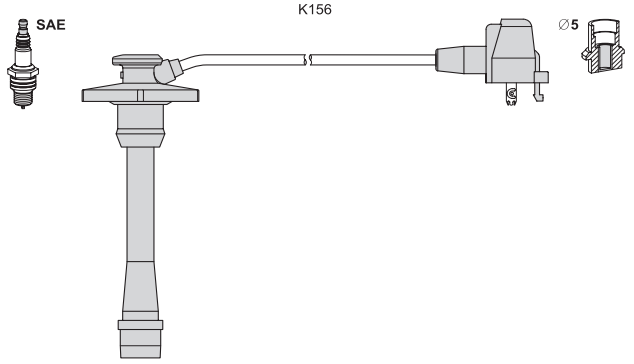

Toyota Starlet (EP91) 1.3	04.96 - 03.99	55	4E-FE

T402P K355 31 46 50 61 K158 30

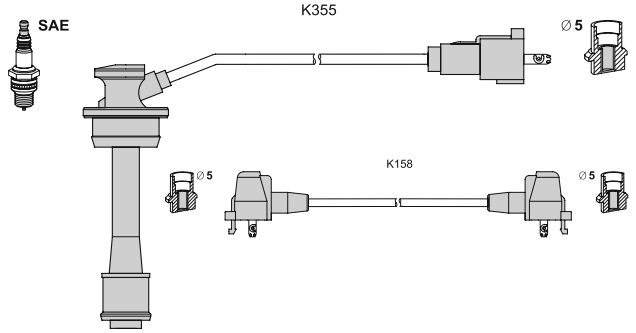

Toyota Celica Cabrio 2.0 GTi	10.89 - 11.93	115	3S-GE
Celica Coupe 2.0 GTi	09.91 - 11.93	115	3S-GE
2.0 Turbo 4WD	10.89 - 11.93	150	3S-GTE
2.0 Turbo 4WD	10.89 - 11.93	153	3S-GTE

T403H K012 40 45 -

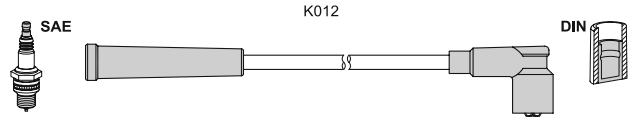

application → T627S

T406C K403 43 55 58 60 - alternative T056B

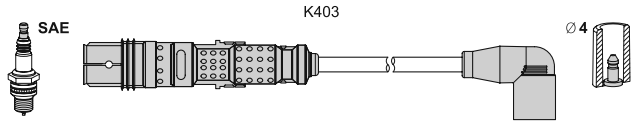

Audi A1 (8X1) 1.2 TFSI	05.10 -	63	CBZA
A1 Sportback(8XA) 1.2 TFSI	01.12 -	63	CBZA
A3 (8P1) 1.2 TSI	04.10 - 08.12	77	CBZB
A3 Cabrio (8P7) 1.2 TFSI	03.10 -	77	CBZB
A3 Sportback(8PA) 1.2 TSI	04.10 -	77	CBZB
Seat Altea (5P1) 1.2 TSI	04.10 -	77	CBZB
Altea XL 1.2 TSI	04.10 -	77	CBZB
Ibiza V (6J5) 1.2 TSI	09.10 -	77	CBZB
Ibiza V Sportcoupe 1.2 TSI	09.10 -	77	CBZB
Ibiza V ST (6J8) 1.2 TSI	09.10 -	77	CBZB
Ibiza V ST (6J8) 1.2 TSI	09.12 -	63	CBZA
Leon (1P1) 1.2 TSI	02.10 -	77	CBZB
Toledo IV (KG3) 1.2 TSI	07.12 -	63	CBZA
Toledo IV (KG3) 1.2 TSI	07.12 -	77	CBZB
Skoda Fabia 1.2 TSI	03.10 -	63	CBZA
Fabia 1.2 TSI	03.10 -	77	CBZB
Fabia Combi 1.2 TSI	03.10 -	63	CBZA
Fabia Combi 1.2 TSI	03.10 -	77	CBZB
Octavia (1Z3) 1.2 TSI	02.10 -	77	CBZB
Octavia Combi (1Z5) 1.2 TSI	02.10 -	77	CBZB
Rapid 1.2 TSI	07.12 -	63	CBZA
Rapid 1.2 TSI	07.12 -	77	CBZB
Rapid Spaceback 1.2 TSI	07.12 -	63	CBZA
Rapid Spaceback 1.2 TSI	07.12 -	77	CBZB
Roomster (5J) 1.2 TSI	03.10 -	63	CBZA
Roomster (5J) 1.2 TSI	03.10 -	77	CBZB
Roomster Praktik 1.2 TSI	03.10 -	63	CBZA
Yeti 1.2 TSI	09.09 -	77	CBZB
VW Beetle (5C1) 1.2 TSI	07.11 -	77	CBZB
Beetle Cabriolet (5C7)	12.12 -	77	CBZB
Caddy III Combi 1.2 TSI	09.10 -	63	CBZA
1.2 TSI	09.10 -	77	CBZB
Caddy III Van 1.2 TSI	09.10 -	63	CBZA
1.2 TSI	09.10 -	77	CBZB

T 406C ▶

< T406C			
VW Golf VI (5K1) 1.2 TSI	05.10 - 11.12	63	CBZA
1.2 TSI	05.09 - 11.12	77	CBZB
Golf VI Cabrio 1.2 TSI	03.11 -	77	CBZB
Golf VI Variant 1.2 TSI	07.10 -	63	CBZA
1.2 TSI	08.09 -	77	CBZB
Golf Plus (5M1,521) 1.2 TSI	11.09 -	77	CBZB
Jetta IV (162) 1.2 TSI	02.11 -	77	CBZB
Polo (6R) 1.2 TSI	05.11 -	66	CBZC
1.2 TSI	11.09 -	77	CBZB
Touran (1T3) 1.2 TSI	05.10 -	77	CBZB

T407B K012 100 30 100 30 K061 30

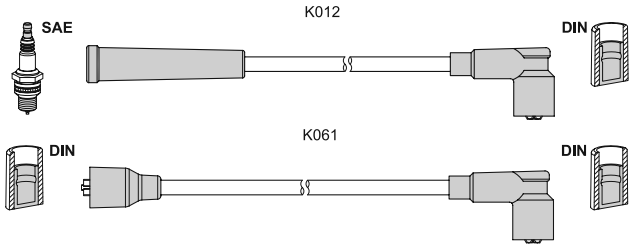

Subaru Leone II 1.8 Turbo AWD	06.85 - 07.86	100	EA82
1.8 4WD	11.84 - 12.90	66	EA82
1.8 4WD	01.88 - 12.90	88	EA82
1.8 Turbo 4WD	03.89 - 12.90	96	EA82
Leone II S. Wagon 1.8 4WD	11.84 - 12.90	66	EA82
1.8 4WD	01.88 - 12.90	88	EA82
1.8 Super 4WD	03.89 - 12.90	96	EA82
1.8 Super 4WD cat	07.86 - 02.92	70	EA82
1.8 Super Turbo 4WD	11.84 - 12.90	100	EA82

T409H K010 30 40 50 60 K060 45

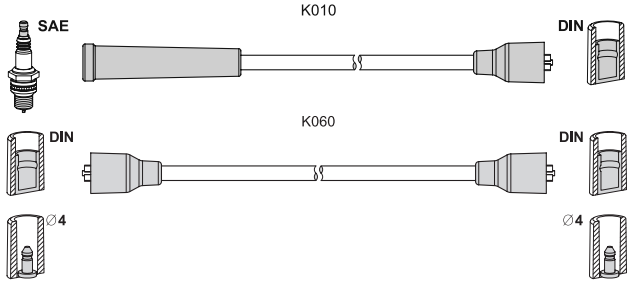

application → T369S

T410G K045 60 65 80 80 -

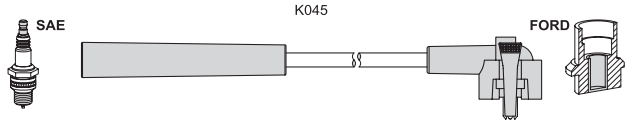

Ford Escort '86 Express 1.1	05.86 - 07.90	37	GSG
1.3	07.88 - 07.90	46	JBA
1.3	02.86 - 07.90	44	JLA/JBB/JLB
Escort '91 Express 1.3	07.90 - 12.94	46	JBD
Escort IV 1.3	01.86 - 07.90	44	JLA/JBB/JLB
1.3	07.88 - 10.90	46	JBA
1.6 XR3i	01.86 - 08.89	77	LRB/LR2
Escort IV Combi 1.3	01.86 - 07.90	44	JLA/JBB/JLB
Escort V (GAL) 1.3	07.90 - 09.92	44	J6A/J4B
Escort V Combi 1.3	09.91 - 09.92	44	J6A/J4B
Escort VI 1.3	09.92 - 01.95	44	J6A/J4B
Escort VI Combi 1.3	09.92 - 01.95	44	J6A/J4B
Escort VI Sedan 1.3	08.93 - 01.95	44	J6A/J4B
Escort VII 1.3	01.95 - 08.98	44	J6A

< T410G			
Ford Escort VII Combi 1.3	01.95 - 08.98	44	J6A
Escort VII Sedan 1.3	01.95 - 08.98	44	J6A
Fiesta III (GFJ) 1.0	03.89 - 12.95	33	TLB
1.1	03.89 - 12.95	37	G6A
1.1	03.89 - 12.95	40	GUD/GUE
1.3	03.89 - 12.92	44	JBC
1.3	03.89 - 12.95	44	JBB, JBC
1.3 cat	05.91 - 01.97	44	J6B
Orion II (AFF) 1.3	12.85 - 07.90	44	JLA/JBB/JLB
1.6	12.85 - 07.90	66	LUC
1.6 i	08.89 - 07.90	75	LJB
Orion III (GAL) 1.3	07.90 - 12.93	44	J6A/J4B

T412M K010 40 45 45 55 K075 60

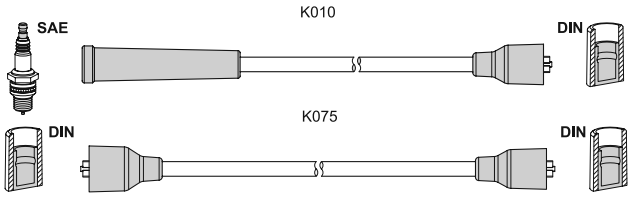

application → T355S

T413M K012 50 55 65 70 K079 30

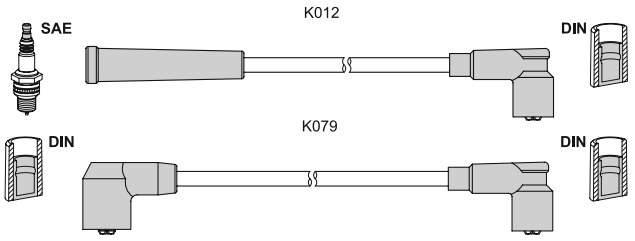

application → T356S

T414M K010 30 50 60 70 K075 80

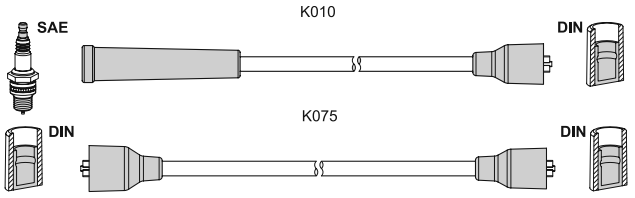

application → T357S

T415M K010 45 35 30 30 K075 40

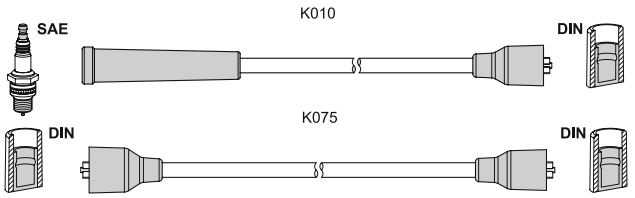

application → T358S

T416M K010 40 45 45 50 K075 80

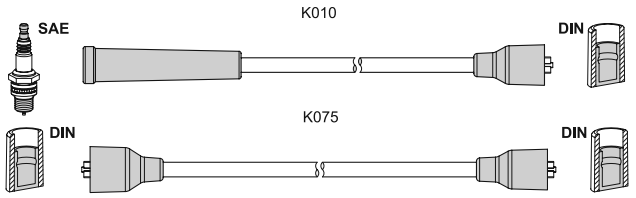

application → T359S

T417S K481 42 29 28 29 -

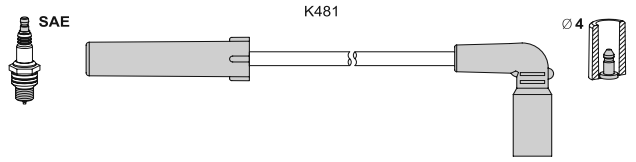

GAZ 2705 Gazel Bussin. 2.9i Euro 3	08.09 -	90	UMZ 4216
3221 Gazel Bussin. 2.9i Euro 3	08.09 -	90	UMZ 4216
3302 Gazel Bussin. 2.9i Euro 3	08.09 -	90	UMZ 4216
2217 Sobol Bussin. 2.9i Euro 3	08.09 -	90	UMZ 4216
2310 Sobol Bussin. 2.9i Euro 3	08.09 -	90	UMZ 4216
2752 Sobol Bussin. 2.9i Euro 3	08.09 -	90	UMZ 4216

T418S K012 35 35 50 50 K079 65
T419H K012 35 35 50 50 K079 65
T420M K012 35 35 50 50 K079 65

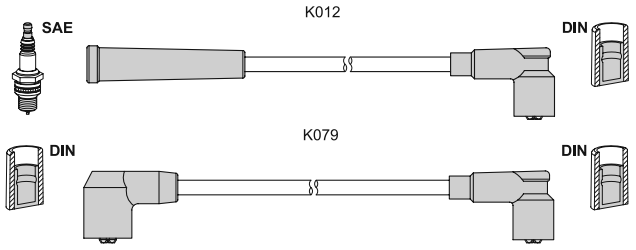

Lada 2120 Nadezhda 1.8	12.97 - 06	60	VAZ 2130
2121 Niva 1.7	94 - 98	56	VAZ 21213
1.8	01 -	60	VAZ 2130
21214 Niva 1.7	94 - 98	56	VAZ 21213
1.8	01 -	60	VAZ 2130
2131 Niva 1.8	01 -	60	VAZ 2130
2329 Niva Pick Up 1.8	01 -	60	VAZ 2130
Lada 4x4 1.7	94 - 98	56	VAZ 21213
1.8	01 -	60	VAZ 2130

T423B K132 40 45 55 60 K078 55

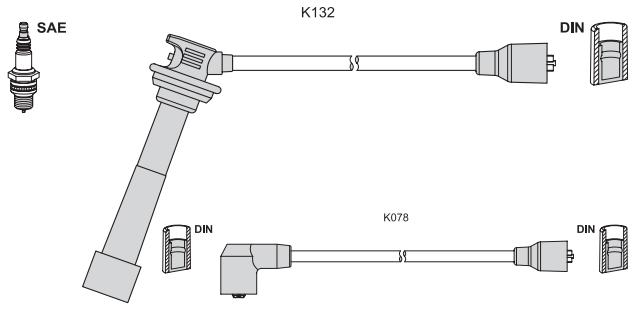

Suzuki Swift I (AA) 1.3	10.84 - 03.89	54	G13A
Swift II CC 1.3	03.89 - 12.91	52	G13A
Swift II Sedan 1.3	10.84 - 05.01	50	G13A

T424S K011 35 50 50 60 K072 40

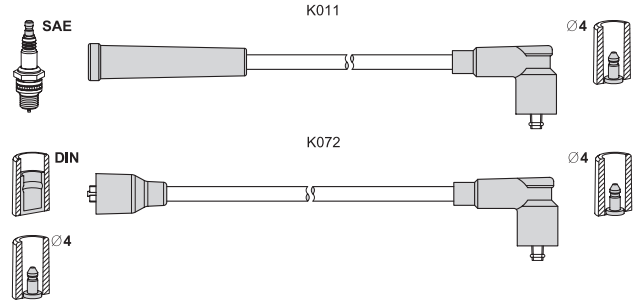

Wartburg 353 1.3	09.88 - 05.91	43	4V07,2/7,5GRF
353 Tourist 1.3	02.89 - 05.91	43	4V07,2/7,5GRF

T425B K010 60 70 80 80 K060 70

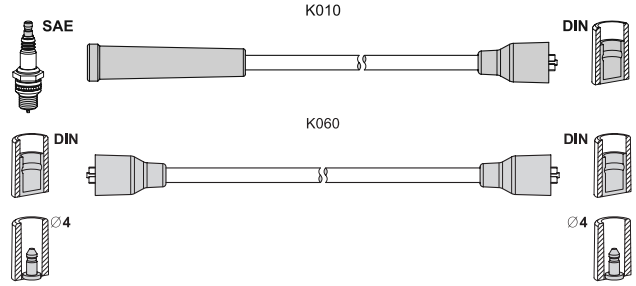

Alfa Romeo 75 (162B) 1.6	05.85 - 09.89	81	AR 06100
1.6 cat	05.89 - 02.92	81	AR 61101
1.8	09.85 - 06.89	85	AR 06202
1.8	09.88 - 02.92	88	AR 06168/AR 61102
1.8	08.89 - 02.92	90	AR 61201
1.8 Turbo	09.86 - 02.92	110	AR 06134
1.8 i.e. Turbo	02.86 - 01.90	114	AR 06158
2.0	05.85 - 10.88	94	AR 06212
90 (162) 1.8	10.84 - 07.87	85	AR 06202
1.8	10.84 - 07.87	89	AR 06202
2.0 i.e.	10.84 - 07.87	94	AR 01713/AR 06212
GTV (116) 2.0	07.78 - 01.86	96	AR 06212/AR 01655
2.0	01.85 - 12.85	94	AR 06212

T427B K010 70 70 80 90 K060 80

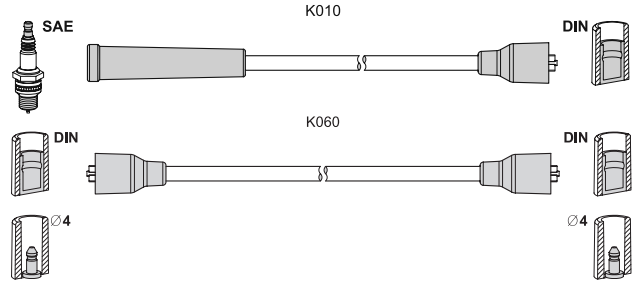

Alfa Romeo Spider 1600 1.6	03.76 - 12.90	76	AR 00526
1.6	03.71 - 12.79	80	AR 00536
Spider (115) 2000 2.0	08.86 - 12.90	85	AR 01544
2.0	08.86 - 12.90	92	AR 00515
2.0 Veloce	01.77 - 12.93	93	AR 00515/AR 01590

T 428B ▶

T428B K017 60 60 60 60 K072 40

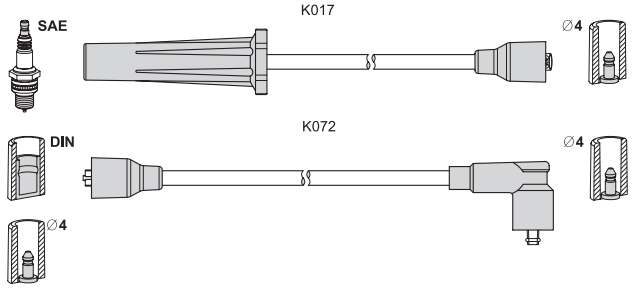

application → T702C (original)

T429B K018 80 80 70 60 50 K065 40

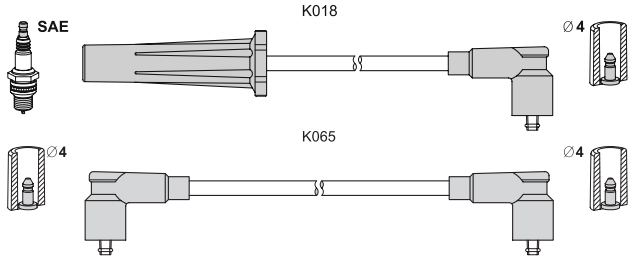

application → T700C (original)

T431B K025 35 45 50 60 K075 50

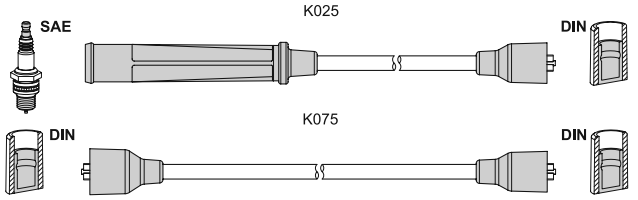

Mazda B-serie (UN) 2.2 8V 4WD	06.99 -	68	JL22

T432B K487 26 38 38 K107 20 K069 36

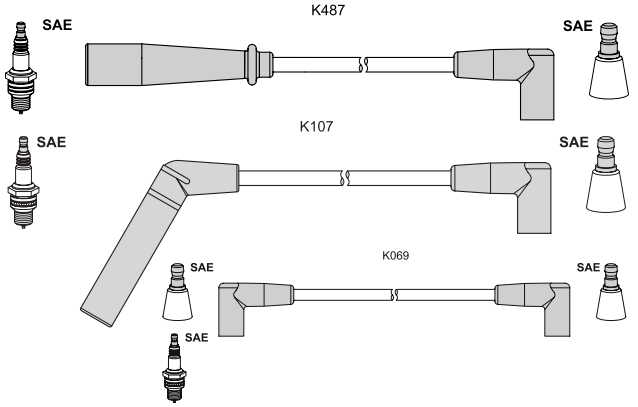

Jeep Cherokee (XJ) 2.5	10.90 - 09.96	89	EPE
2.5	10.95 - 09.01	89	EPE
2.5 i 4x4	12.91 - 09.01	90	EPE/HX
Wrangler I (YJ, SJ) 2.5	12.91 - 08.96	89	EPE
Wrangler II (TJ) 2.5	08.96 - 04.07	87	P00

T433B K107 22 22 26 26 K070 33

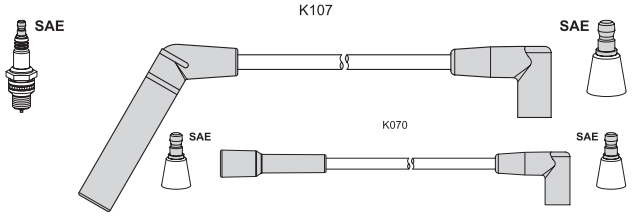

Jeep Cherokee (XJ) 2.5 i	11.96 - 09.01	87	EPE
2.5 SE	10.96 - 09.99	87	EPE

T435B K042 60 65 70 80 K062 40

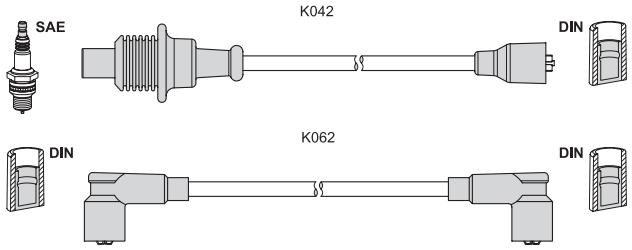

Citroen BX 15 (XB-_) 1.5	10.87 - 05.92	59	B1E (XU51C)
BX 16 1.6	01.87 - 02.93	53	B1E (XU51C)
1.6	07.85 - 02.93	64	171D
1.6	10.82 - 06.88	66	171B/171A/171C
1.6	03.86 - 02.93	76	180Z
BX 19 1.9	09.86 - 11.89	70	D2C (XU92C)
1.9	07.86 - 05.89	75	159A
1.9	07.86 - 05.89	77	D2A (XU92C)
1.9 GTi	06.88 - 02.93	88	DKZ (XU9JA)
1.9 GTi 4x4	06.88 - 02.93	88	DKZ (XU9JA)
BX 15 Break 1.5	10.87 - 03.88	59	B1E (XU51C)
BX 16 Break 1.6	09.88 - 12.94	53	B1E (XU51C)
1.6	07.85 - 12.94	64	171D
1.6	06.85 - 06.88	66	171B/171A/171C
1.6	03.86 - 12.94	76	180Z
BX 19 Break 1.9	06.88 - 12.94	88	DKZ (XU9JA)
1.9	12.87 - 12.89	70	D2C (XU92C)

T437B K027 50 60 60 70 K065 70

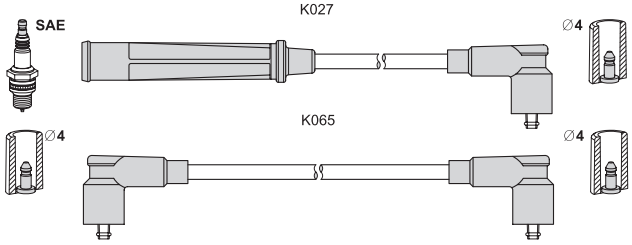

BMW 315 (E21) 1.6	03.81 - 03.84	55	M10 B16
316 (E21) 1.6	08.75 - 08.80	66	M10 B16
1.8	09.80 - 08.82	66	M10 B18
318 i (E21) 1.8	11.79 - 08.82	77	M10 B18
315 (E30) 1.6	09.82 - 12.91	55	M10 B16
316 (E30) 1.8	09.82 - 12.87	66	M10 B18
316 Ecotronic (E30) 1.8	09.83 - 12.90	66	M10 B18
316 i (E30) 1.8	08.87 - 08.88	75	M10 B18
318 i (E30) 1.8	12.84 - 08.88	75	M10 B18
1.8	09.82 - 08.87	77	M10 B18
518 (E28) 1.8	06.81 - 08.84	66	M10 B18
518 i (E28) 1.8	09.83 - 12.87	77	M10 B18
Trabant 1.1 Sedan 1.1	05.90 - 12.91	30	4VO5,9/7,5GRF
Cabrio 1.1	05.90 - 12.91	30	4VO5,9/7,5GRF
Combi 1.1	05.90 - 12.91	30	4VO5,9/7,5GRF

T440B K053 70 60 50 K013-40 K070 45

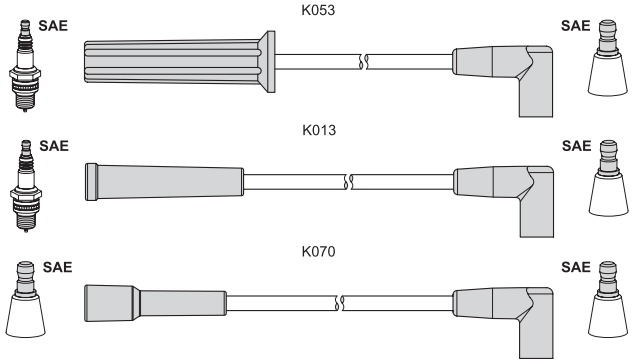

application → T736B

T441B K010-45 K031 50 45 K077 50

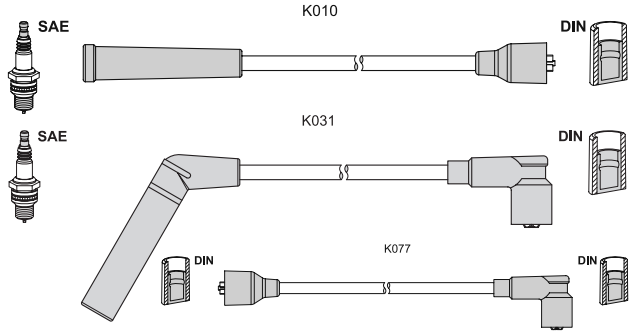

Daewoo Matiz (KLYA) 0.8	09.98 - 12.01	38	F8CV
Tico (KLY3) 0.8	02.95 - 12.00	35	F8C
0.8	01.96 - 12.00	38	F8CV

T442B K369 72 70 56 50 -

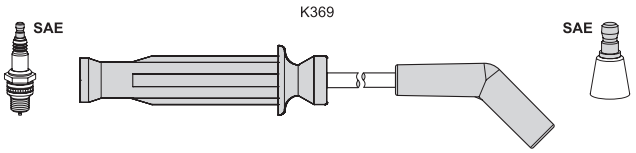

Landrover Discovery I 2.0 16 V	09.93 - 10.98	99	

T443B K139 35 45 55 65 K077 50

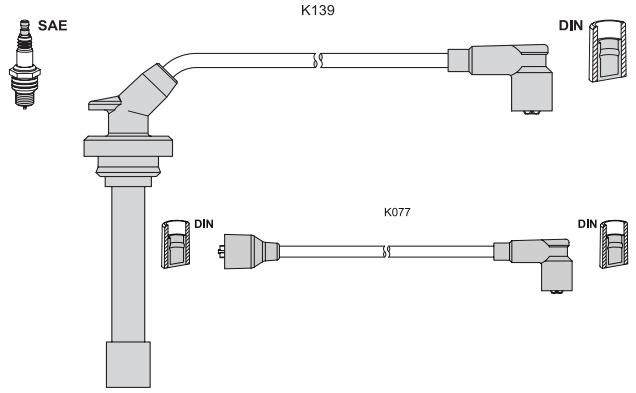

Daihatsu Applause I 1.6 16V	06.89 - 07.97	77	HD-E
1.6 16V	06.89 - 07.97	66	HD
1.6 16V 4WD	06.89 - 07.97	77	HD-E
Applause II 1.6 16V	07.97 - 05.00	73	HD-E
Charade III 1.3 i	06.88 - 12.92	66	HCE
1.3 i 4WD	06.88 - 01.93	66	HCE
Charade III Sedan 1.3	11.90 - 02.93	66	HCE
Charade IV 1.3	09.96 - 11.99	44	HC

< T443B

Daihatsu Charade IV 1.3 16V	05.96 - 11.99	55	HCE
1.3 i 16V	01.93 - 11.99	62	HC
1.5 16V	01.97 - 11.99	66	HEE/HEEG
1.6 GTi	03.93 - 11.99	77	HD-E
Charade IV Sedan 1.5 16V	08.94 -	66	HEE

T444B K010 60 65 70 K060 40

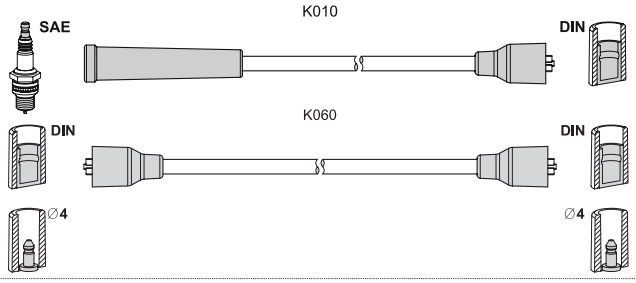

Daihatsu Cuore II 0.8	11.89 - 12.90	29	ED 10
0.8	09.85 - 06.90	32	ED 10
0.8 4WD	09.86 - 10.88	32	ED 10
Charade III 1.0	03.87 - 12.92	38	CB 23
1.0	11.90 - 12.92	40	CB 90
1.0	04.89 - 12.92	41	CB 90
1.0 GTi	03.87 - 12.92	74	CB 80 T
1.0 Turbo	03.87 - 10.90	50	CB 61
Move (L6, L9) 0.8	10.96 -	31	ED 20

T445B K187 41 43 51 58 K061 43

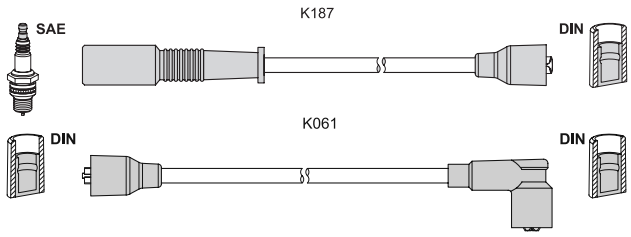

Fiat Panda 750 0.75	01.86 - 01.95	25	141 B.000
Panda Van (141_) 0.75	01.86 - 07.92	25	141 B.000

T446B K235 20 20 38 48 K061 118

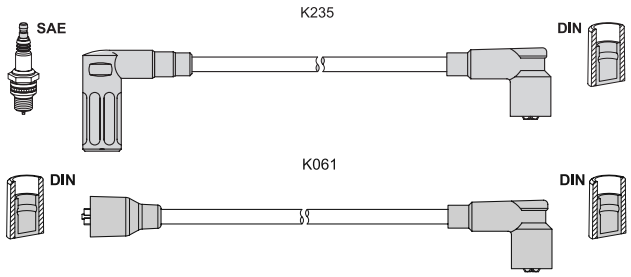

Fiat Uno 1.4 Turbo i.e.	09.89 - 09.93	82	146 A8.046
1.4 Turbo i.e.	12.89 - 12.96	87	146 A8.000

T455B K010 40 40 50 50 K060 60

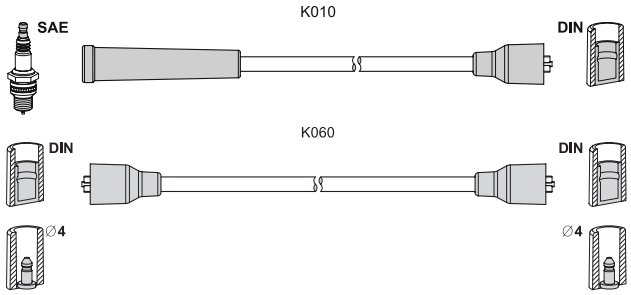

T 455B ▶

< T455B

Fiat Panda (141A_) 900 0.9	10.80 - 06.94	33	146 A.000/100 GL3.__
Uno 45 (146A/E) 0.9	03.83 - 09.92	33	146 A.000/_ A.1000
Seat Marbella (28) 0.8	08.86 - 12.93	25	08 NCA
0.9	01.87 - 12.93	29	100 GL 7000/09 NCA
0.9 cat	01.90 - 11.96	29	100 GL 7000/09 NCB
Marbella Van (028A) 0.8	01.87 - 12.93	25	08 NCA
0.9	01.87 - 12.93	29	09 NCA
0.9 cat	01.87 - 12.93	29	09 NCB

T456B K010 50 60 70 80 K061 40

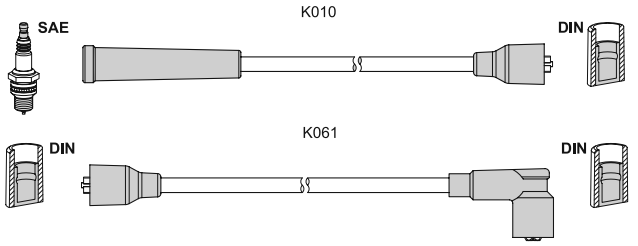

Fiat Argenta (132A) 1.6	04.81 - 12.85	72	132 D.000
2.0	06.78 - 12.85	83	132 D1.000/_ C2.000
Suzuki Super Carry Bus 1.0	10.92 - 03.99	31	F10A
1.0	09.94 - 03.99	30	F10A
1.0	10.85 - 03.99	33	F10A

T457C K261 110 100 90 85 80 63 -

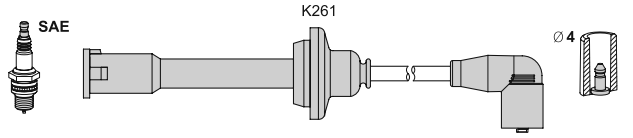

Fiat Croma (154) 2500 2.5 V6	06.93 - 08.96	119	834 G.000

T458B K010 30 30 40 40 K555 40

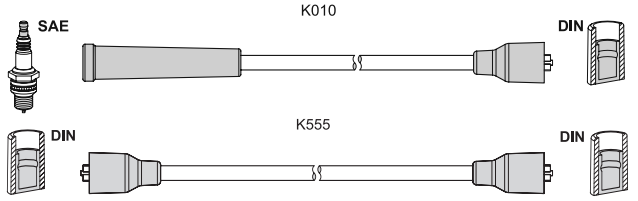

Fiat Duna 60 (146 B) 1.1	01.87 - 12.91	43	146 A6.000
Duna 70 (146 B) 1.3	01.87 - 12.91	49	146 A5.000
Duna 60 Weekend 1.1	01.87 - 12.91	43	146 A6.000
Duna 70 Weekend 1.1	01.87 - 12.91	49	146 A5.000
Fiorino (127) 0.9	10.77 - 12.84	33	100 GL.000
Fiorino (147) 1.0	12.86 - 04.88	41	156 A.000
1.3	12.87 - 08.93	49	146 A5.000
Fiorino 60 (147) 1.1	11.86 - 04.88	40	146 A9.000
Fiorino Pick up (147) 1.1	09.87 - 12.88	41	
Fiorino Pick up (146) 1.3	01.88 - 12.94	49	146 A5.000
Fiorino 60 Van 1.1	05.88 - 12.93	40	146 A9.000
Fiorino 70 Van 1.3	01.88 - 12.94	49	146 A5.000

T459G K338 60 60 70 80 K061 40

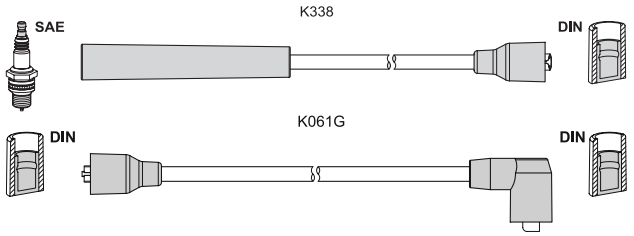

Ford Capri II 1.6	02.74 - 12.77	53	LCE
Capri III 1.6	01.78 - 04.87	54	LCN
2.0	01.78 - 12.85	74	NEN/OHC TL 20 H
2.0	01.78 - 12.85	64	

T460G K340 50 50 50 60 70 70 K061 70

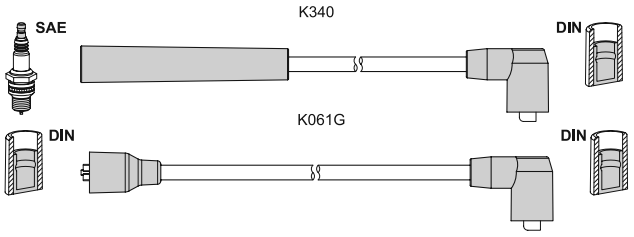

Ford Capri II 2.3	02.74 - 12.77	79	YYE
3.0	02.74 - 12.77	101	HYF
3.0	02.74 - 12.77	101	HYF
Capri 2.0	01.78 - 12.82	66	NYL
2.3 Super	06.79 - 12.85	84	YYN
3.0	01.78 - 12.81	101	HYF

T462G K338 60 60 70 80 K061 50

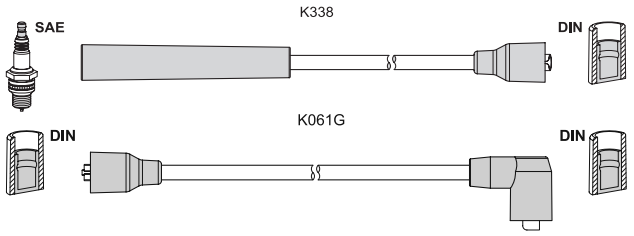

Ford Escort III (GAA) 1.6	09.80 - 10.82	71	LUA
Fiesta II (FBD) 1.4	10.86 - 02.89	52	F6C/F6A
1.4	02.87 - 02.89	54	FUD
1.4	10.85 - 11.89	55	FUB
Scorpio I 1.8	04.85 - 02.92	66	REC
2.0	04.85 - 08.89	77	N8D/NEL
Scorpio I Sedan 2.0	03.90 - 08.92	77	N8B

T463G K012 50 60 70 80 K061 60

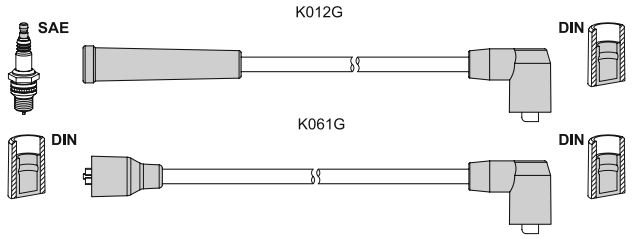

Ford Escort III 1.6	05.83 - 07.86	48	CHT 1600
Escort IV 1.4	10.85 - 10.90	51	FUAA
1.6	01.86 - 12.88	58	LP2
1.6	04.89 - 07.90	65	LUG
1.6 i	01.86 - 05.90	66	L4B
Escort IV Cabriolet 1.6	01.86 - 12.87	58	LP2/LPA
1.6 i	01.86 - 07.90	66	L4B

< T463G

Ford Escort IV Combi 1.6	01.86 - 07.90	58	LP2
1.6 i	01.86 - 07.90	66	L4B
Fiesta II (FBD) 1.6 XR2	03.84 - 02.89	70	LUD
1.6 XR2	04.84 - 02.89	71	LUB
Orion I (AFD) 1.3	07.83 - 03.86	51	JPA
1.6	07.83 - 03.86	58	LP1/LPA
1.6 i	07.83 - 03.86	77	LRA/LR1
Orion II (AFF) 1.3	12.85 - 07.90	44	JLA/JBB/JLB
1.4	12.85 - 07.90	55	FUA
1.4 cat	02.87 - 07.90	54	F6D/F6B
1.6	12.85 - 07.90	66	LUC
1.6 i	03.86 - 07.90	77	LRB
1.6 i	08.89 - 07.90	75	LJB
1.6 i cat	03.86 - 07.90	66	L4B

T464G K010 60 60 70 80 K061 70

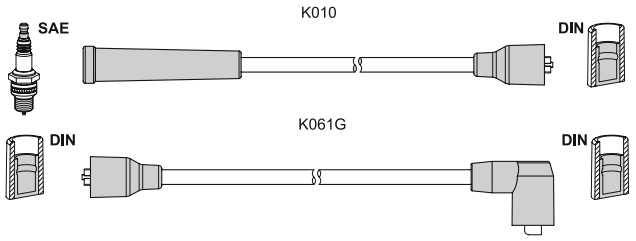

Ford Granada 2.0	08.79 - 08.85	74	NEP
Granada Combi 2.0	08.79 - 08.85	74	NEP

T465G K510 45 40 35 K509 25 -

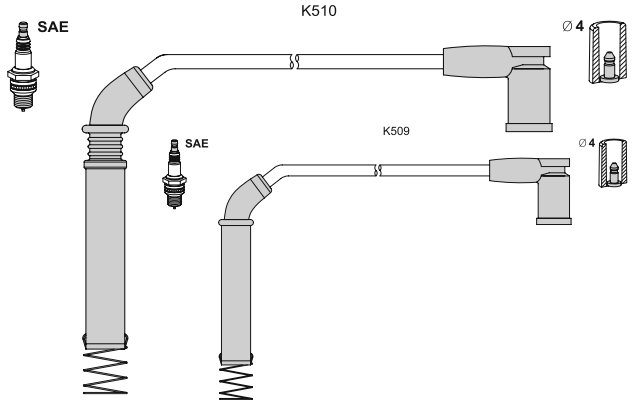

Ford Fiesta V 1.3	11.01 -	44	BAJA
1.3	11.01 -	51	A9JA/A9JB
Fiesta Van 1.3	10.03 -	51	A9JA/A9JB
Ka (RB_) 1.3 i	09.96 - 11.08	44	BAA
1.3 i	08.02 - 11.08	51	A9B/A9A
1.6 i	07.03 - 11.08	70	CDC/CDB
Street Ka 1.6	05.03 - 07.05	70	CDRA/CDRB

T466G K049 60 60 70 80 K030 70

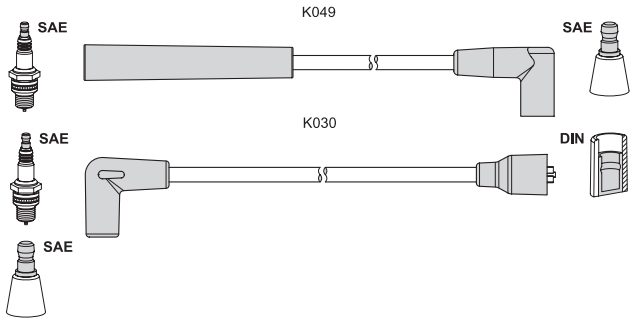

Ford Orion II (AFF) 1.4	01.86 - 07.90	54	FUC

< T466G

Ford Scorpio I 2.0 i	10.85 - 12.85	74	NRC
Sierra (GBG, GB4) 2.0 i	01.87 - 02.93	85	N4I/N4A
Sierra Hatch. (GBC) 1.8	10.84 - 10.85	66	REB
2.0	08.82 - 10.85	77	NET
2.0 i	03.85 - 12.86	85	NR2/NRB
2.0 i	01.87 - 02.93	85	N4I/N4A
Sierra Combi (BNC) 1.8	10.84 - 10.85	66	REB
2.0	08.82 - 10.85	77	NET
2.0	03.85 - 12.86	85	NR2/NRB
2.0 i	01.87 - 02.93	85	N4I/N4A

T467G K049 50 60 70 70 80 80 K069 45

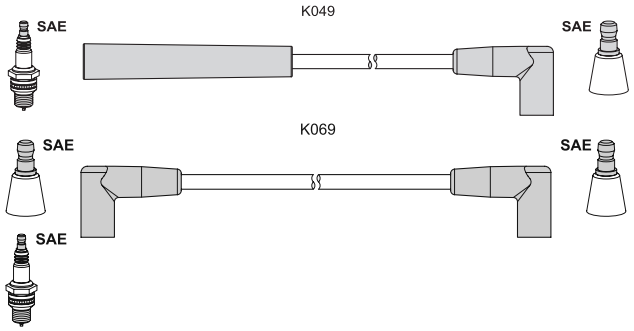

Ford Probe I 3.0 V6	09.89 - 07.93	104	

T468G K408 55 45 40 25 -

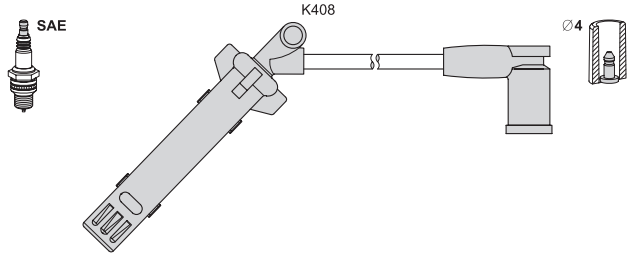

Ford Galaxy (WGR) 2.0i	02.01 - 05.06	85	ZVSA
2.3 16V	04.00 - 05.06	107	E5SA
2.3 16V	09.01 - 05.06	103	E5SB

T469G K049 50 60 60 80 K030 60

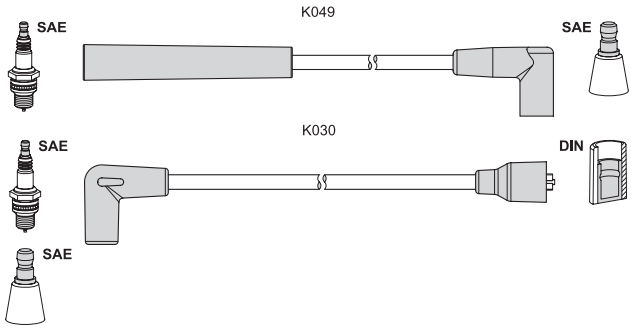

Ford Sierra (GBG, GB4) 1.8	10.87 - 09.89	59	RED/REF
Sierra Hatchback 1.8	10.87 - 05.88	59	RED/REF
Sierra Combi (BNG) 1.8	10.87 - 05.88	59	RED/REF

T 470G ▶

T470G K338 60 65 75 85 K061 60

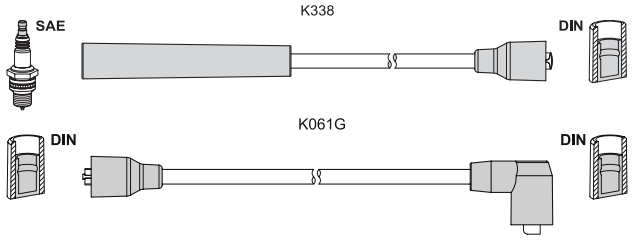

Ford Sierra (GBG, GB4) 1.8	01.87 - 05.88	66	R2A
2.0 i	01.87 - 12.89	74	NE5/NEJ
2.0 i cat	01.87 - 02.93	74	N4B
Sierra Hatch. (GBC) 1.3	08.82 - 12.86	44	JCT
1.6	08.82 - 12.86	55	LCS/LCT/LSD
1.8	10.85 - 12.86	66	REB
2.0	10.85 - 12.86	77	NET
Sierra Hatch. (GBG) 1.8	01.87 - 05.88	66	RED/R2A
2.0 i	01.87 - 02.93	74	NE5/NEJ
2.0 i cat	01.87 - 02.93	74	N4B
Sierra Combi (BNC) 1.6	08.82 - 12.86	55	LCS/LCT/LSD
1.8	10.85 - 12.86	66	REB
2.0	10.85 - 12.86	77	NET
Sierra Combi (BNG) 1.8	01.87 - 05.88	66	R2A
2.0 i	01.87 - 02.93	74	NE5/NEJ
2.0 i cat	01.87 - 02.93	74	N4B

T471G K409 30 15 + + -

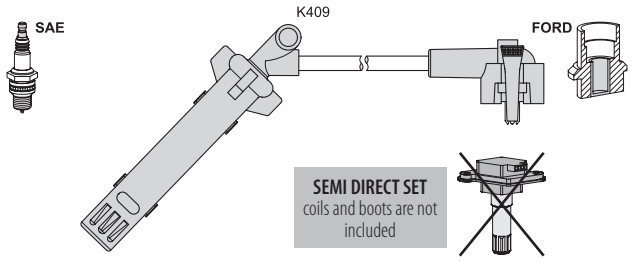

Ford Escort V (GAL) 2.0 RS	05.91 - 12.92	110	N7A
Escort VI 2.0 RS	09.92 - 01.95	110	N7A
2.0 RS 4x4	08.93 - 01.95	110	N7A
2.0 RS Cosworth 4x4	09.92 - 01.95	162	N5F
Escort VII 2.0 RS	02.95 - 02.98	110	N7A
2.0 RS 4x4	02.95 - 10.98	110	N7A
2.0 RS Cosworth 4x4	02.95 - 10.98	162	N5F
Galaxy (WGR) 2.3 16V	01.97 - 03.00	107	Y5B
Scorpio II 2.0 i 16V	10.94 - 08.98	100	N3A
2.3 i 16V	06.96 - 08.98	108	Y5A
Scorpio II Combi 2.0 i 16V	10.94 - 08.98	100	N3A
2.3 i 16V	06.96 - 08.98	108	Y5A
Transit Bus (FD_) 2.3 16V	08.00 - 05.06	107	E5FC/E5FA
Transit Flatbed 2.3 16V	04.01 - 05.06	107	E5FC/E5FA
Transit Van (FA_) 2.3 16V	04.01 - 05.06	107	E5FC/E5FA

T474G K010 50 60 60 70 K061 60

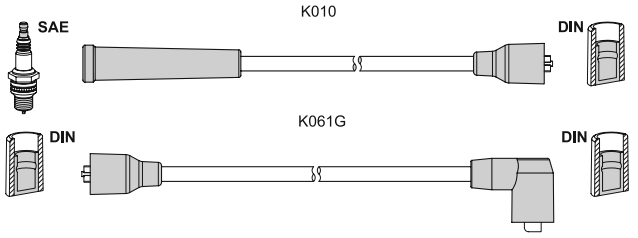

Ford Escort '86 Express 1.3	02.86 - 07.90	44	JLA/JBB/JLB
Fiesta II (FBD) 1.0	09.83 - 11.89	33	TLB
1.0	09.83 - 02.89	33	TKB

< T474G

Ford Fiesta II (FBD) 1.1	05.86 - 02.89	36	GSH
1.1	09.83 - 02.89	37	GSF/GLC

T475B K401 25 40 45 60 -

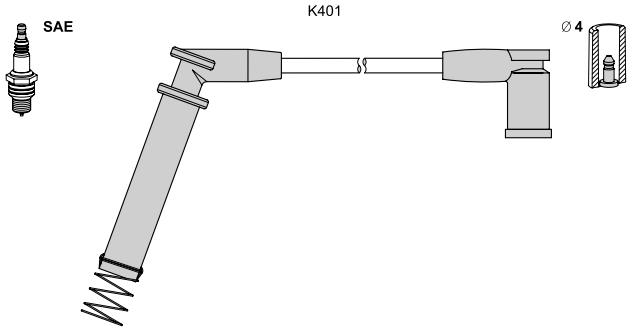

Ford Focus I Rocam 1.6	08.02 - 05	72	Zetec Rocam

T476G K338 60 65 75 85 K062 50

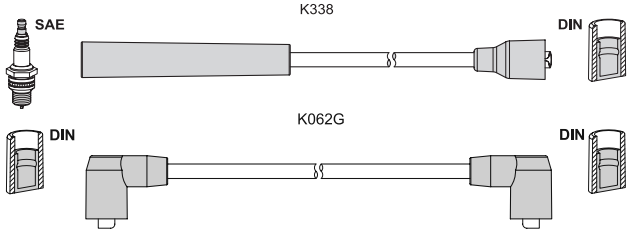

Ford Transit Bus (T_ _) 2.0	11.85 - 09.92	57	NAT/NAV
Transit Flatbed (T_ _) 2.0	01.86 - 09.92	57	NAT/NAV
Transit Van (T_ _) 2.0	09.85 - 09.92	57	NAT/NAV

T477B K445 61 61 53 53 38 38 -

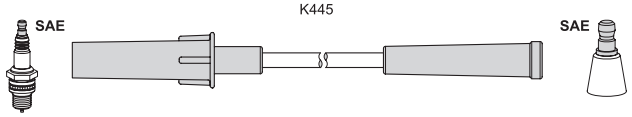

Chrysler Voyager IV (RG,RS) 3.3	02.00 - 12.08	128	EGA
3.3 AWD	02.00 - 12.08	128	EGA
3.3 Flex Fuel	02.00 - 12.08	128	EGM
3.8	02.00 - 12.08	160	EGH
3.8 AWD	02.00 - 12.08	160	EGH
Jeep Wrangler II (TJ) 3.8	02.06 - 12.08	153	EGT
Wrangler III (JK) 3.8	04.07 -	146	EGT
VW Routan 3.8	09.08 - 12.10	147	CGUA

T478B K413 60 59 47 49 34 38 -

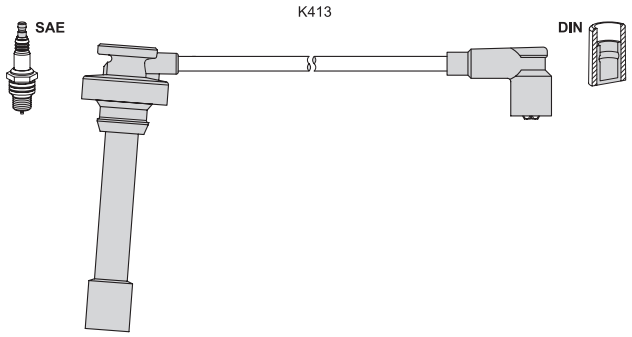

Chrysler Stratus (JA) 2.5 LX V6	12.95 - 04.01	120	EEB/H00
2.5 V6	12.95 -	125	H00
Stratus Cabrio 2.5 LX	04.96 - 04.01	120	625H

T479B K414 65 70 75 85 K439 60

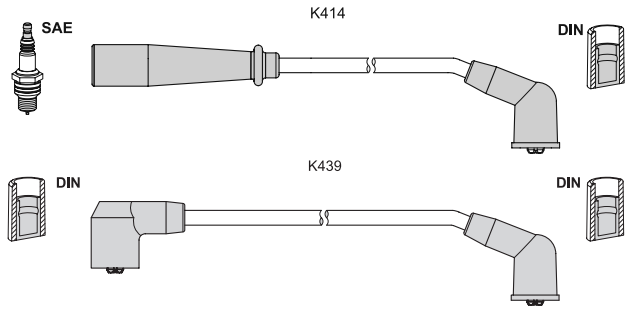

Hyundai Pony 1.3	10.85 - 09.89	50	G13B
1.5	10.85 - 09.89	53	G15B/G4DJ
Pony Sedan 1.3	10.85 - 09.89	50	G13B
1.5	10.85 - 09.89	53	G15B/G4DJ

T480B K381 70 60 50 40 K078 40

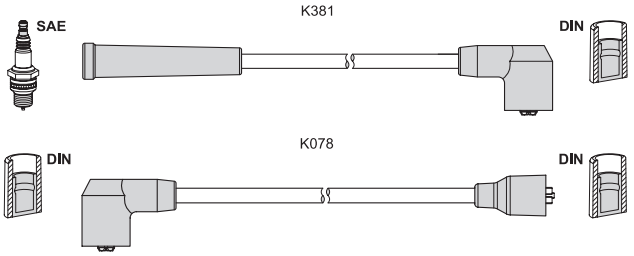

Mazda 121 I (DA) 1.1	10.87 - 10.90	42	B1/B116
1.3	10.87 - 11.90	44	B3
1.3	04.89 - 10.90	40	B3
323 III (BF) 1.3	08.85 - 05.89	44	E3
1.5 i	08.85 - 05.89	70	E5E3
1.5 i Turbo	08.85 - 05.89	85	E5E2
323 III Hatchback 1.3	09.85 - 12.87	44	E3
1.5 i	08.85 - 05.89	70	E5E3
1.5 i Turbo	08.85 - 05.89	85	E5E2
323 III Station Wagon 1.3	07.86 - 04.90	44	E3

T481B K012 80 70 60 60 K075 40

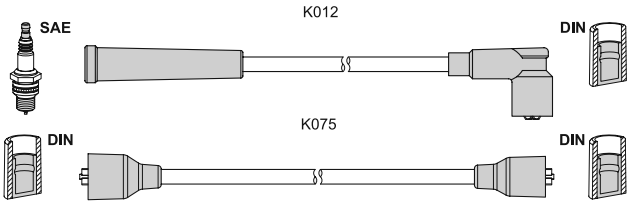

Mazda 323 II (BD) 1.1	11.80 - 10.85	40	E1
1.3	09.81 - 10.85	44	E3
1.3	11.80 - 10.89	50	E3
1.5	11.80 - 07.85	59	E5
1.5	05.81 - 12.85	55	E5
1.5	03.82 - 09.86	65	E5
1.6 GLX	06.86 - 03.87	54	B68
323 II Hatchback (BD) 1.1	11.80 - 10.85	40	E1
1.3	11.80 - 10.85	44	E3
1.3	11.80 - 10.89	50	E3
1.5	05.81 - 07.85	55	E5
1.5	11.80 - 12.83	63	E5
1.5	08.82 - 04.85	59	D5
1.5	03.82 - 12.85	65	E5
323 III (BF) 1.1	08.85 - 04.90	40	E1
1.5	09.87 - 10.89	54	B5
1.6 GT	11.86 - 10.89	63	B6 (SOHC)
1.6 GT	01.86 - 12.88	77	B6 (SOHC)

< T481B

Mazda 323 III Hatchback (BF) 1.1	09.85 - 10.89	40	E1
1.5	09.87 - 10.89	54	B5
1.6 GT	09.87 - 10.89	63	B6 (SOHC)
1.6 GT	08.85 - 08.93	77	B6 (SOHC)
323 III Station Wagon 1.5	05.86 - 05.89	55	B50/B53/E5
1.5	01.87 - 05.89	54	B50/B53/B5

T482B K012 70 60 50 50 K492 50

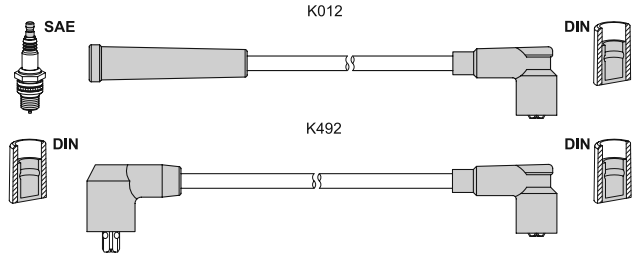

Mazda 323 III (BF) 1.4	04.87 - 07.89	44	B3
323 III Hatchback (BF) 1.4	09.87 - 10.89	44	B3
323 III St. Wag. (BW) 1.6	09.86 - 10.95	63	B6 /B65M /B6E
1.6 4x4	05.90 - 03.93	63	B65M /B6E
323 C IV (BG) 1.3	09.89 - 07.94	49	B3E
1.3 16V	09.89 - 07.94	54	B3 (16V)
1.6	09.89 - 06.91	62	B6E
1.6 16V	03.91 - 10.94	65	B6
1.8 16V 4WD	11.91 - 12.93	76	BP
323 F IV (BG) 1.6	09.89 - 06.91	62	B6E
1.6 16V	03.91 - 10.94	65	B6
1.8 16V	08.89 - 07.94	76	BP
1.8 4WD	01.91 - 04.94	76	BPC
323 S IV (BG) 1.3	09.89 - 06.91	49	B3E/B383
1.3 16V	04.91 - 07.94	54	B3 (16V)
1.6	09.89 - 06.91	62	B6E
1.6 16V	08.89 - 10.94	65	B6
1.8 16V	08.89 - 07.94	76	BP52
1.8 16V 4WD	09.91 - 07.94	76	BP52
MX-3 (EC) 1.6 i	07.91 -	65	B69

T485B K012 40 40 50 60 K061 40

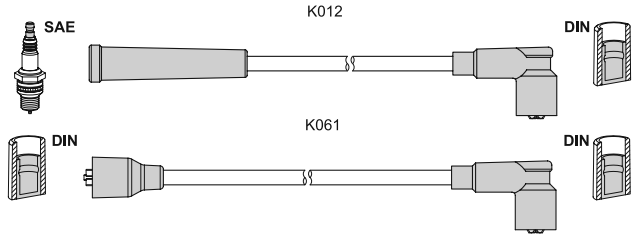

Mazda E 2000 Bus (SR1) 2.0	11.84 - 02.88	63	FE18/FEV4
2.0 4WD	10.88 - 09.89	60	FEBN
E 2000 Van (SR2) 2.0	05.85 - 04.89	63	FE18/FE58

T487B K025 60 80 80 110 K061 60

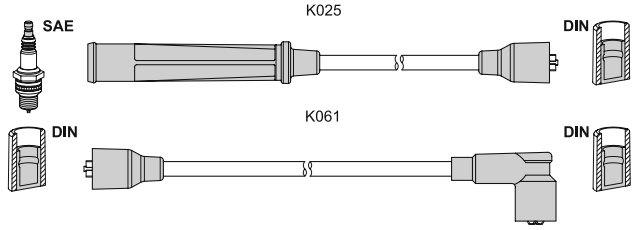

Mitsubishi Galant II 1.6 GLX	09.80 - 05.84	55	4G32
2.0 GLS	09.80 - 05.84	75	4G63 (SOHC 8V)
2.0 Turbo Eci	05.82 - 05.84	125	4G63 T (ECI)

T 487B ▶

< T487B				
Mitsubishi Galant II St. Wag. 1.6 GLX	09.80 - 05.84	55	4G32
2.0 GLX	09.80 - 06.83	75	4G63 (SOHC 8V)
Galant III (E1_A) 2.0 GLS	06.84 - 04.90	75	4G63 (SOHC 8V)
2.0 Turbo Eci	06.84 - 04.90	110	4G63 T (SOHC 8V)

T488B K028 50 60 80 80 K061 40

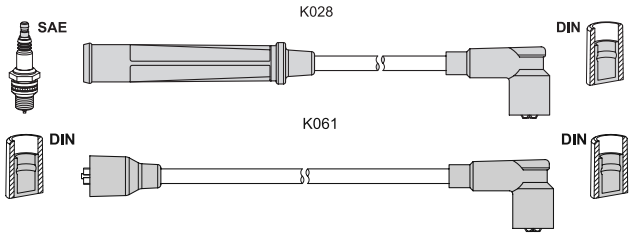

Nissan Bluebird 1.6	03.86 - 06.90	61	CA16S
1.6	12.85 - 02.90	66	CA16S
1.8	11.86 - 04.90	66	CA18S
1.8 Turbo	12.85 - 05.90	99	CA18T
2.0	12.85 - 12.87	75	CA20S
2.0 i	12.85 - 12.90	77	CA20E
2.0 i	09.88 - 09.90	85	CA20E
Bluebird (U11) 1.6	12.85 - 02.90	66	CA16S
1.8	11.83 - 06.88	66	CA18S
1.8 Turbo	04.84 - 05.90	99	CA18T
2.0 i	04.84 - 01.88	77	CA20E
Bluebird Hatchback 1.6	03.86 - 06.90	61	CA16S
1.8 Turbo	12.85 - 05.90	99	CA18T
2.0	12.85 - 12.87	75	CA20S
2.0 i	12.85 - 12.90	77	CA20E
2.0 i	09.88 - 09.90	85	CA20E
Bluebird Stat. Wagon 1.6	12.85 - 02.90	66	CA16S
1.8	11.83 - 04.90	66	CA18S
1.8 Turbo	09.84 - 04.90	99	CA18ET
2.0	04.86 - 09.90	75	CA20S
2.0 i	04.84 - 12.90	77	CA20E

T489B K012 40 60 70 80 K061 40

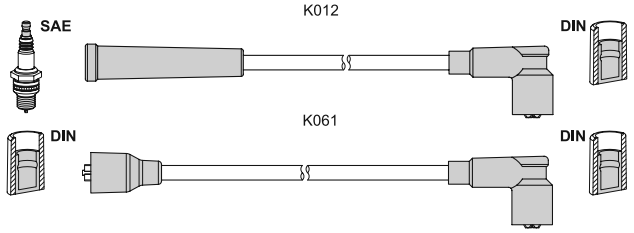

Nissan Cherry II Coupe 1.5	08.81 - 05.82	51	E15
Cherry III (N12) 1.3	05.82 - 10.86	44	E13
1.5	11.83 - 10.86	55	E15S
1.5 ET Turbo	01.83 - 12.85	77	E15ET
Sunny I (B11) 1.3	03.82 - 08.90	44	E13
Sunny II (N13) 1.3	07.86 - 10.91	44	E13S
1.6 i	06.86 - 10.90	54	E16i
1.6 i 4x4	06.86 - 10.90	54	E16i
Sunny II Coupe 1.6 i	06.86 - 05.89	54	E16i
Sunny II Hatch. 1.3	06.86 - 10.88	44	E13S
1.6 i	06.86 - 10.90	54	E16i
Sunny II Traveller 1.6 i	08.86 - 05.89	54	E16i
1.6 i 4x4	06.86 - 05.89	54	E16i

T491B K012 50 60 70 80 K061 40

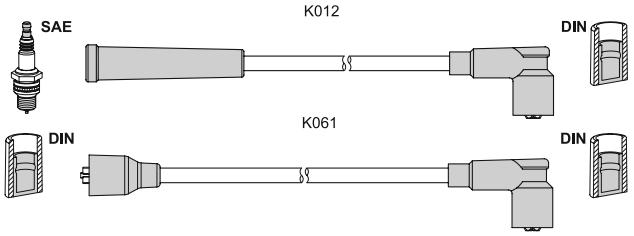

Nissan Sunny II (N13) 1.4 LX	10.88 - 08.91	55	GA14S
Sunny II Hatchback 1.4 LX	01.89 - 08.91	55	GA14S

T492B K010 40 30 30 30 K061 40

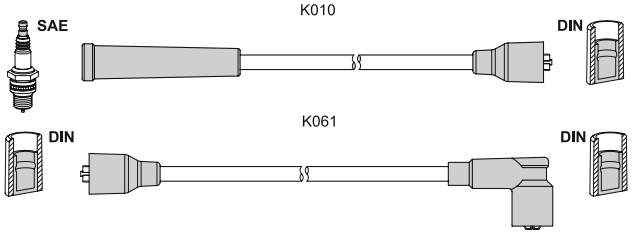

Nissan Vanette Bus (C22) 1.5	10.86 - 12.95	51	A15S
Vanette Bus (KC120) 1.5	01.83 - 12.87	51	A15
Vanette Van (C22) 1.5	10.86 - 12.95	51	A15S

T494B K042 60 70 80 95 K061 70

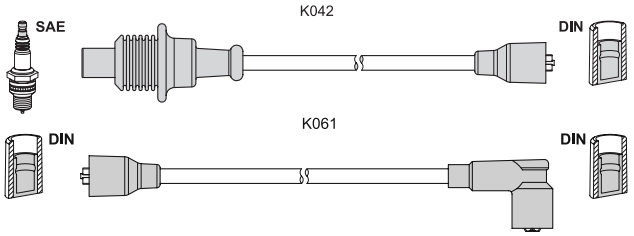

Peugeot 205 I (741A/C) 1.6	08.86 - 10.87	55	B1A (XU51C)
1.6 GTI	12.84 - 10.87	76	180A (XU5J)
205 I Cabriolet 1.6 CTI	04.86 - 10.90	76	180A / 180Z
205 II (20A/C) 1.6 GTI	10.87 - 12.89	76	180A / 180Z
1.6 GTI	10.87 - 12.89	85	
1.9 GTI	10.87 - 05.89	75	D2A (XU92C)
1.9 GTI cat	10.87 - 07.94	75	DFZ (XU9J1)
305 II (581M) 1.6	10.82 - 06.84	71	171 (XU5S)
1.6	10.82 - 07.88	55	B1A (XU51C)
1.6	07.84 - 08.87	66	171 (XU5S)
1.6	11.86 - 12.88	54	BAZ (XU5CP)
1.9	10.82 - 08.85	75	159 (XU9S)
1.9	11.86 - 12.88	72	DFZ (XU9J1)
305 II Break (581E) 1.6	09.83 - 06.84	71	171 (XU5S)
1.6	07.84 - 12.87	66	171 (XU5S)
1.6	02.86 - 12.88	55	B1A (XU51C)
1.6	11.86 - 12.88	54	BAZ (XU5CP)
1.9	09.84 - 10.87	75	159 (XU9S)
1.9	11.86 - 12.88	72	DFZ (XU9J1)
309 I (10C, 10A) 1.6	08.87 - 07.89	53	B1E (XU51C)
1.6	10.85 - 07.89	55	B1A (XU51C)
1.6	11.85 - 09.88	76	180Z / B6B (XU5J)
1.6	07.86 - 06.89	83	
1.6 cat	09.86 - 12.89	55	BAZ (XU5CP)
1.9	03.86 - 07.89	72	DFZ (XU9J1)
1.9	10.85 - 07.89	75	D2B (XU9S)
405 I (15B) 1.6	07.87 - 12.92	53	B1E (XU51C)
1.6	07.87 - 06.88	55	B1E / BAZ
1.9	07.87 - 12.92	70	D2C (XU92C)
1.9 Injection	07.87 - 12.92	77	DFZ (XU9J1)

< T494B

Peugeot 405 I Break (15E) 1.6	10.88 - 08.92	53	B1E (XU51C)
1.6	10.88 - 08.92	55	BAZ (XU5CP)
1.9	10.88 - 08.92	70	D2C (XU92C)
1.9	10.88 - 08.92	77	DFZ (XU9J1)

T495B K479 54 49 49 49 -

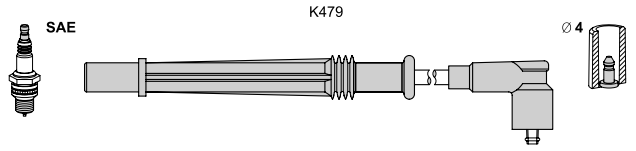

Dacia Logan (LS_) 1.2 16V	02.06 -	55	D4F 732
Logan II 1.2	10.12 -	55	D4F 732
1.2 LPG	10.12 -	55	D4F 734
Logan MCV II 1.2	05.15 -	54	D4F 732
1.2	02.13 -	55	D4F 732
1.2 LPG	02.13 -	55	D4F 734
Sandero 1.2 16V	11.08 -	55	D4F 732
1.2 16V LPG	11.08 -	55	D4F 732
Sandero II 1.2	10.12 -	55	D4F 732
1.2 LPG	10.12 -	55	D4F 732
Nissan Kubistar (X76) 1.2 16V	04.06 -	55	D4F 712
Kubistar Van 1.2 16V	04.06 -	55	D4F 712
Renault Clio II 1.2 16V	06.01 -	55	D4F 728/_714/D4F_
Clio III 1.2 16V	06.05 -	48	D4F 740
1.2 16V	06.05 -	55	D4F 740
1.2 16V	06.05 -	58	D4F 764
1.2 16V	05.07 -	74	D4F 784
1.2 16V	09.10 -	76	D4F 786
1.2 16V Hi-Flex	07.08 -	55	D4F 740/D4F 742
Clio Grandtour 1.2 16V	02.08 -	55	D4F 740
1.2 16V	02.08 -	58	D4F 764
1.2 16V Hi-Flex	07.08 -	55	D4F 740
Clio Grandtour IV 1.2 16V	01.13 -	54	D4F 740
Kangoo (KC0/1_) 1.2 16V	06.01 -	55	D4F 714/_716/_712
Kangoo Express 1.2 16V	10.01 -	55	D4F 714/_712/_730
Modus (F/JP01_) 1.2 16V	12.04 -	55	D4F 740
1.2 16V	12.04 -	58	D4F 764
1.2 16V Hi-Flex	10.08 -	55	D4F 740
Twingo (C06_) 1.2 16V	08.04 -	44	D4F 708
1.2 16V	01.01 -	55	D4F 702
Twingo (CN0_) 1.2 16V	03.07 -	56	D4F 772

T496B K046 50 65 K387 75 85 K070 65

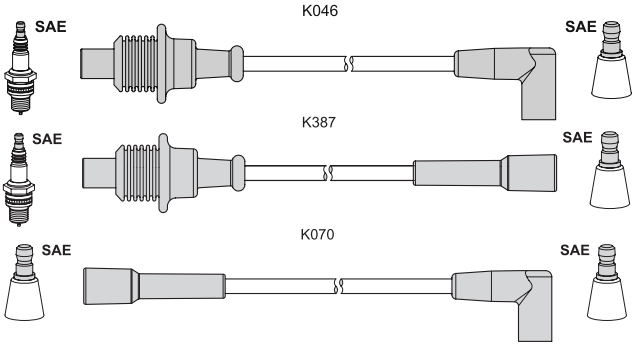

Citroen BX 15 1.5	10.87 - 05.92	59	B1E (XU51C)
BX 16 1.6	01.87 - 02.93	53	B1E (XU51C)
1.6	07.85 - 02.93	64	171D
1.6	09.89 - 02.93	55	BAZ / BAY
1.6 E	05.89 - 03.91	65	BDY/ BDZ
BX 19 1.9	09.86 - 11.89	70	D2C (XU92C)
1.9	07.86 - 05.89	75	159A
1.9 E 4x4	04.89 - 02.93	80	D2F

< T496B

Citroen BX 19 1.9 GTi	06.88 - 02.93	88	DKZ (XU9JA)
1.9 GTi 4x4	06.88 - 02.93	88	DKZ (XU9JA)
BX 15 Break 1.5	04.88 - 05.92	59	B1E (XU51C)
BX 16 Break 1.6	09.88 - 12.94	53	B1E (XU51C)
1.6	07.85 - 12.94	64	171D
1.6	05.89 - 03.91	65	BDY/ BDZ
BX 19 Break 1.9	06.88 - 12.94	88	DKZ (XU9JA)
1.9	12.87 - 12.89	70	D2C (XU92C)
Peugeot 205 II (20A/C) 1.6	10.87 - 09.98	53	B1E (XU51C)
1.6	01.90 - 09.98	55	B1A (XU51C)
309 I (10C, 10A) 1.6	01.86 - 07.89	69	
1.9	07.88 - 07.89	80	DDZ (XU9M)
309 II (3C, 3A) 1.6	07.89 - 12.93	65	BDY / BDZ
1.6	07.89 - 12.93	69	B2A (XU52C/K)
1.6	07.89 - 12.93	68	B2A (XU52C/K)
405 I (15B) 1.6	07.87 - 12.92	53	B1E (XU51C)
1.6	10.89 - 09.90	66	BDZ (XU5M)
1.6	07.87 - 06.88	55	B1E / BAZ
1.6	07.87 - 09.90	65	BDY/ BDZ
1.6	01.87 - 12.92	69	B2A (XU52C/K)
1.9	07.87 - 12.92	70	D2C (XU92C)
1.9	07.88 - 12.92	80	DDZ (XU9M)
1.9 4x4	07.88 - 12.92	80	DDZ (XU9M)
405 I Break (15E) 1.6	10.88 - 08.92	53	B1E (XU51C)
1.6	10.88 - 08.92	66	BDZ (XU5M)
1.6	10.88 - 09.90	65	BDY/ BDZ
1.9	10.88 - 08.92	70	D2C (XU92C)
1.9	10.88 - 08.92	88	DKZ (XU9JAZ)
1.9	10.88 - 08.92	80	DDZ (XU9M)
1.9 4x4	10.88 - 08.92	80	DDZ (XU9M)

T497B K043 40 50 60 80 -

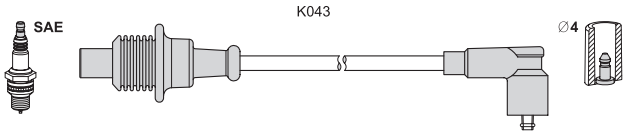

Citroen Berlingo (MF) 1.8 i	05.97 -	66	LFX (XU7JB)
1.8 i 4WD	04.97 -	66	LFX (XU7JB)
Berlingo Van (M_) 1.8 i	08.99 - 10.02	66	LFX (XU7JB)
BX 16 (XB-_) 1.6 E	03.91 - 02.93	65	BDY / BDZ
BX 16 Break (XB-_) 1.6	03.91 - 12.94	65	BDY / BDZ
Evasion (22, U6) 1.8	05.97 - 07.02	73	LFZ (XU7JP)
Jumper Bus (230P) 2.0	02.94 - 04.02	80	RFW (XU10J2U)
2.0 4x4	08.96 - 04.02	80	RFW (XU10J2U)
Jumper Flatbed (230) 2.0	03.94 - 04.02	80	RFW (XU10J2U)
Jumper Van (230L) 2.0	03.94 - 04.02	80	RFW (XU10J2U)
2.0 4x4	10.96 - 01.02	80	RFW (XU10J2U)
Jumper Bus (244) 2.0	04.02 -	81	XU10J2
2.0 Bivalent	02.03 -	81	XU10J2
Jumper (244) 2.0	04.02 -	81	XU10J2
2.0 Bivalent	02.03 -	81	XU10J2
Xantia (X1) 1.6 i	03.93 - 01.98	65	BFZ (XU5JP)
1.8 i	03.93 - 01.98	74	LFZ (XU7JP)
1.8 i	04.97 - 01.98	66	LFX (XU7JB)
1.8 i 16V	06.95 - 01.98	81	LFY (XU7JP4)
Xantia (X2) 1.8 i	01.98 - 04.03	66	LFX (XU7JB)
Xantia Break (X1) 1.8 i	06.95 - 01.98	74	LFZ (XU7JP)
1.8 i	04.97 - 01.98	66	LFX (XU7JB)
1.8 i 16V	06.95 - 01.98	81	LFY (XU7JP4)
Xantia Break (X2) 1.8 i	01.98 - 04.03	66	LFX (XU7JB)
Xsara (N1) 1.8 i	04.97 - 09.00	66	LFX (XU7JB)
1.8 i 16V	04.97 - 09.00	81	LFY (XU7JP4)
1.8 i Aut.	04.97 - 09.00	74	LFZ (XU7JP)
Xsara Break (N2) 1.8 i	10.97 - 09.00	66	LFX (XU7JB)

T 497B ▶

< T497B

Citroen Xsara Break (N2) 1.8 i 16V	10.97 - 09.00	81	LFY (XU7JP4)
1.8 i Aut.	10.97 - 09.00	74	LFZ (XU7JP)
Xsara Coupe (N0) 1.8 i	02.98 - 09.00	66	LFX (XU7JB)
1.8 i	02.98 - 09.00	74	LFZ (XU7JP)
1.8 i 16V	02.98 - 09.00	81	LFY (XU7JP4)
ZX (N2) 1.6	07.94 - 10.97	66	
1.6 i	03.91 - 06.97	65	BFZ / BDY
1.8	07.94 - 10.97	76	
1.8 i	07.92 - 06.97	74	LFZ (XU7JP)
1.8 i 16V	01.96 - 06.97	81	LFY (XU7JP4)
1.9	03.91 - 09.93	96	
1.9	03.91 - 06.97	93	D6E (XU9JA)
1.9 i	03.91 - 06.97	88	DKZ (XU9JA)
ZX Break (N2) 1.6 i	10.93 - 10.97	65	BFZ / BDY
1.8 i	10.93 - 10.97	74	LFZ (XU7JP)
1.8 i 16V	01.96 - 02.98	81	LFY (XU7JP4)
Fiat Ducato Bus 2.0 4x4	11.94 - 11.01	80	RFW
2.0 Panorama	03.94 - 04.02	80	RFW
Ducato Flatbed (230) 2.0	06.98 - 04.02	80	RFW
Ducato Van (230L) 2.0	03.94 - 04.02	80	RFW
Ducato Bus (244, Z_) 2.0	04.02 -	81	RFL
2.0 Bipower	11.02 -	81	RFL
Ducato Van (244) 2.0	04.02 -	81	RFL
2.0 Bipower	11.02 -	81	RFL
Ulysse (220) 1.8	05.97 - 08.02	73	LFW
Peugeot 205 I Cabriolet 1.6 CJ	08.92 - 12.94	65	BDY (XU5M3Z)
205 II (20A/C) 1.6 Aut.	05.90 - 09.98	65	BDY
306 (7B, N3, N5) 1.8 16V	03.97 - 05.01	81	LFY (XU7JP4)
1.8 ST	06.94 - 05.01	74	LFZ (XU7JP)
306 Break (7E, N3, N5) 1.8	03.97 - 04.02	74	LFZ (XU7JP)
1.8 16V	03.97 - 04.02	81	LFY (XU7JP4)
306 Cabriolet 1.8	03.94 - 04.02	74	LFZ (XU7JP)
1.8 16V	07.00 - 04.02	81	LFY (XU7JP4)
306 CC 1.8	05.93 - 05.01	74	LFZ (XU7JP)
1.8 16V	03.97 - 05.01	81	LFY (XU7JP4)
309 II (3C, 3A) 1.6	07.89 - 12.93	65	BDY / BDZ
405 I (15B) 1.6	09.90 - 12.92	66	BDZ (XU5M)
1.6	09.90 - 12.92	65	BDY / BDZ
405 I Break (15E) 1.6	10.88 - 08.92	66	BDZ (XU5M)
1.6	09.90 - 08.92	65	BDY / BDZ
405 II (4B) 1.6	08.92 - 10.95	65	BFZ / BDY / BDZ
1.8	08.92 - 10.95	74	LFZ (XU7JP)
405 II Break (4E) 1.6	08.92 - 10.96	65	BFZ / BDY / BDZ
1.8	08.92 - 10.96	74	LFZ (XU7JP)
406 (8B) 1.6	11.95 - 05.04	65	BFZ (XU5JP)
1.8	05.97 - 05.04	66	LFX (XU7JB)
1.8 16V	11.95 - 03.99	81	LFY (XU7JP4)
406 Break (8E/F) 1.8	05.97 - 10.04	66	LFX (XU7JB)
1.8 16V	10.96 - 03.99	81	LFY (XU7JP4)
806 (221) 1.8	07.95 - 08.02	73	LFW (XU7JP)
Boxer Bus (230P) 2.0 i	03.94 - 04.02	80	RFW (XU10J2)
2.0 i 4x4	08.96 - 04.02	80	RFW (XU10J2)
Boxer Bus (244, Z_) 2.0	04.02 -	81	RFL (XU10J2U)
Boxer Flatbed (ZCT_) 2.0	12.01 - 04.02	81	RFL (XU10J2U)
2.0 i	06.94 - 04.02	80	RFW (XU10J2)
Boxer Van (230L) 2.0 4x4	03.96 - 09.98	80	
2.0 i	06.94 - 04.02	80	RFW (XU10J2)
Boxer Van (244) 2.0	04.02 -	81	RFL (XU10J2U)
Expert (224) 1.8	10.96 - 09.00	74	LFZ (XU7JP)
Expert Van (222) 1.8	10.96 - 09.00	74	LFZ (XU7JP)
Partner Combispace 1.8	05.97 -	66	LFX (XU7JB)
Partner Van (5) 1.8	03.97 -	66	LFX (XU7JB)

T498B K022 50 60 65 85 -

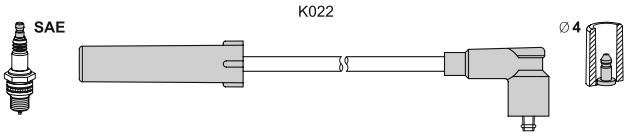

Citroen BX Break 19 (XB) 1.9	04.90 - 12.94	80	DDZ (XU9M)
Evasion (22, U6) 2.0	06.94 - 07.02	89	RFU (XU10J2/C)
2.0 Turbo C.T.	06.94 - 07.02	108	RGX (XU10J2TE)
Xantia (X1) 2.0 i	03.93 - 01.98	89	RFX (XU10J2C)
2.0 i 16V	03.93 - 01.98	112	RFY (XU10J4/Z)
2.0 i 16V	06.94 - 01.98	110	RFT (XU10J4/Z)
2.0 i 16V	06.95 - 01.98	97	RFV (XU10J4R)
2.0 Turbo	06.95 - 01.98	108	RGX (XU10J2TE)
Xantia (X2) 2.0 i	01.98 - 04.03	89	RFX (XU10J2C)
2.0 Turbo	01.98 - 04.03	108	RGX (XU10J2TE)
Xantia Break (X1) 2.0 i	06.95 - 01.98	89	RFX (XU10J2C)
2.0 i 16V	06.95 - 01.98	97	RFV (XU10J4R)
2.0 Turbo	06.95 - 01.98	108	RGX (XU10J2TE)
Xantia Break (X2) 2.0 i	01.98 - 04.03	89	RFX (XU10J2C)
2.0 Turbo	01.98 - 04.03	108	RGX (XU10J2TE)
XM (Y3) 2.0 i	05.89 - 06.94	89	RFZ (XU10J2)
2.0 i Turbo	09.92 - 06.94	104	RGY (XU10J2TE/Z)
XM (Y4) 2.0 i 16V	05.94 - 10.00	97	RFV (XU10J4R)
2.0 Turbo	05.94 - 10.00	108	RGX (XU10J2TE)
XM Break (Y3) 2.0 i	11.91 - 04.94	89	RFZ (XU10J2)
2.0 Turbo	09.92 - 04.94	104	RGY (XU10J2TE/Z)
XM Break (Y4) 2.0 i 16V	05.94 - 10.00	97	RFV (XU10J4R)
2.0 Turbo	05.94 - 10.00	108	RGX / RGY
Xsara (N1) 2.0 16V	07.98 - 09.00	97	RFV (XU10J4R)
Xsara Break (N2) 2.0 16V	07.98 - 09.00	97	RFV (XU10J4R)
ZX (N2) 2.0	07.94 - 10.97	90	RFX (XU10J2C)
2.0 i	07.92 - 06.97	89	RFX (XU10J2C)
2.0 i 16V	07.92 - 10.94	112	RFT / RFY
2.0 i 16V	06.94 - 06.97	110	RFT (XU10J4/Z)
Fiat Ulysse (220) 2.0	06.94 - 08.02	89	RFU (XU10J2C)
2.0 Turbo	06.94 - 08.02	108	RGX (XU10J2CTE)
Lancia Zeta (220) 2.0 16V	07.00 - 09.02	100	RFN
2.0 Turbo	05.95 - 09.02	108	RGX (XU10J2TE)
Peugeot 306 (7B, N3, N5) 2.0	03.97 - 05.01	97	RFV (XU10J4R)
2.0 ST	07.94 - 05.01	89	RFX (XU10J2)
306 Break (7E, N3, N5) 2.0	03.97 - 04.02	97	RFV (XU10J4R)
306 Cabrio (7D, N3, N5) 2.0	03.94 - 04.02	89	RFX (XU10J2)
2.0 16V	03.97 - 12.97	97	RFV (XU10J4R)
306 CC (7A_) 2.0 16V	03.97 - 12.97	97	RFV (XU10J4R)
2.0 XSi	05.93 - 05.01	89	RFX (XU10J2)
405 II (4B) 2.0	08.92 - 10.95	89	RFX (XU10J2)
2.0 MI_16	08.92 - 10.95	112	RFY (XU10J4Z)
2.0 X4	08.92 - 10.95	89	RFX (XU10J2)
405 II Break (4E) 2.0	08.92 - 10.96	89	RFX (XU10J2)
2.0 4x4	08.92 - 10.96	89	RFX (XU10J2)
406 (8B) 2.0 16V	11.95 - 05.04	97	RFV (XU10J4R)
2.0 Turbo	04.96 - 05.04	108	RGX (XU10J2TE)
406 Break (8E/F) 2.0 16V	10.96 - 03.97	97	RFV (XU10J4R)
2.0 Turbo	10.96 - 10.04	108	RGX (XU10J2TE)
406 Coupe (8C) 2.0 16V	03.97 - 12.04	97	RFV (XU10J4R)
605 (6B) 2.0	10.90 - 09.99	89	RFZ (XU10J2Z)
2.0 Turbo	07.92 - 09.99	104	RGY (XU10J2TE)
2.0 Turbo	07.91 - 09.99	108	RGX (XU10J2TE)
806 (221) 2.0	06.94 - 08.02	89	RFU (XU10J2)
2.0 16V	05.98 - 09.00	97	RFV (XU10J4R)
2.0 Turbo	06.94 - 08.02	108	RGX (XU10J2TE)

T499B K021 40 45 50 60 K060 45

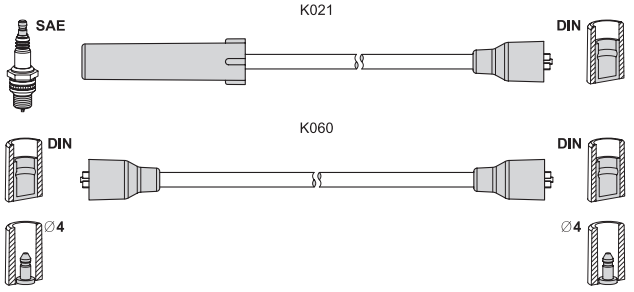

Seat Terra (24) 0.9	02.87 - 12.96	29	09 NCA
Terra Van (024A) 0.9	01.87 - 12.95	29	09 NCA

T500G K374 14 18 32 36 -

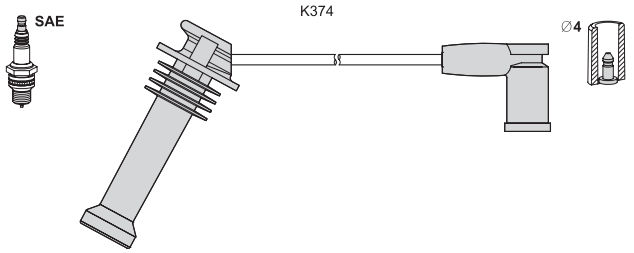

Ford Fiesta IV 1.25 i 16V	05.98 - 01.02	55	DHG/_B/_C/_E/_F
1.6 16V Sport	02.00 - 01.02	76	L1V/L1T
Focus (DAW, DBW) 1.4 16V	10.98 - 11.04	55	FXDA/_DD/_DC/_DB
1.6 16V	10.98 - 11.04	74	FYDH/_DA/_DB/_DD
Focus Combi (DNW) 1.4 16V	02.99 - 11.04	55	FXDA/_DD/_DC/_DB
1.6 16V	02.99 - 11.04	74	FYDH/_DA/_DB/_DD
Focus Sedan (DFW) 1.4 16V	02.99 - 11.04	55	FXDA/_DD/_DC/_DB
1.6 16V	02.99 - 11.04	74	FYDH/_DA/_DB/_DD
Puma (EC_) 1.4 16V	05.00 -	66	FHD/FHF
1.7 16V	05.98 - 06.02	92	MHB/MHA
Volvo C30 1.6	10.06 -	74	B 4164 S3
S40 II (MS) 1.6	01.05 -	74	B 4164 S3
V50 (MW) 1.6	01.05 -	74	B 4164 S3

T501G K200 80 65 50 40 -

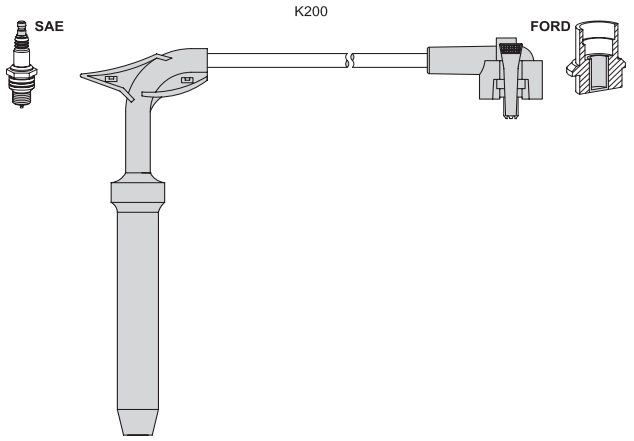

Ford Escort IV 1.6 i	08.89 - 07.90	75	LJB
Escort IV Cabrio 1.6 i	08.89 - 07.90	75	LJB
Escort V (GAL) 1.6	07.90 - 08.92	66	LUJ/LUK
1.6	07.90 - 12.92	77	LJF
Escort V Cabriolet 1.6	07.90 - 12.92	77	LJF
Escort V Combi 1.6	07.90 - 08.92	66	LUJ/LUK
1.6	07.90 - 09.92	77	LJF
Fiesta III (GFJ) 1.6	01.89 - 01.94	65	LUH
1.6 Turbo	03.90 - 10.92	96	LHA
1.6 XR2i	03.89 - 03.93	76	LJD

< T501G

Ford Fiesta III (GFJ) 1.6 XR2i	03.89 - 01.94	81	LJC
Orion III (GAL) 1.6 i	07.90 - 09.92	77	LJF

T502B K201 65 58 50 40 -

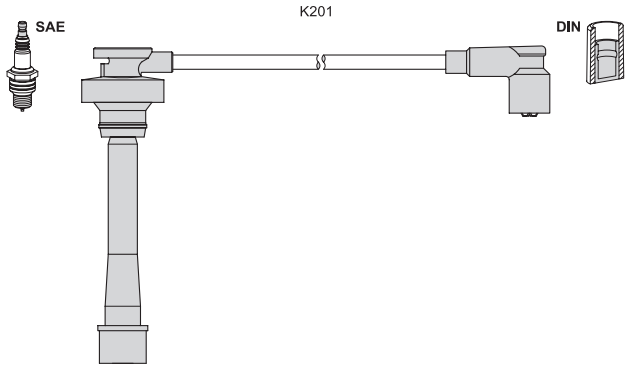

Mitsubishi Colt IV (CA_A) 1.6	02.94 - 02.96	66	4G92
1.6 4WD	08.93 - 08.95	84	4G92
1.6 GLXi 16V	04.92 - 04.96	83	4G92
Galant V 1.8	02.94 - 08.96	85	4G93
1.8 GLSI	11.92 - 08.96	93	4G93 (GDI)
2.0 GLSI	11.92 - 08.96	101	4G63 (SOHC 8V)
2.0 GLSI 4WD	11.92 - 08.96	101	4G63 (SOHC 8V)
Galant V Sedan 1.8	02.94 - 08.96	85	4G93
1.8 GLSI	11.92 - 08.96	93	4G93 (GDI)
2.0 GLSI	11.92 - 08.96	101	4G63 (SOHC 8V)
2.0 GLSI 4WD	11.92 - 08.96	101	4G63 (SOHC 8V)
Lancer IV 1.6 16V	06.92 - 05.94	83	4G92
1.6 4WD	06.92 - 11.93	84	4G92
Lancer V (CB/D_A) 1.6	02.94 - 12.96	66	4G92
1.6 16V	06.92 - 12.96	83	4G92
1.6 16V 4WD	06.92 - 12.96	83	4G92
Lancer V St. Wagon 1.6 16V	12.92 - 10.03	83	4G92
1.6 16V 4WD	12.92 - 10.03	83	4G92
Space Runner 1.8	10.91 - 08.99	90	4G93
1.8	06.96 - 08.99	85	4G93
1.8 4WD	10.91 - 08.99	90	4G93
1.8 4WD	06.96 - 08.99	85	4G93
Space Wagon 1.8	10.91 - 10.98	90	4G93
1.8 4WD	10.91 - 10.98	90	4G93
2.0	10.92 - 10.98	98	4G63 (DOHC 16V)
2.0 4WD	10.92 - 10.98	98	4G63 (DOHC 16V)

T503B K201 60 45 45 25 -

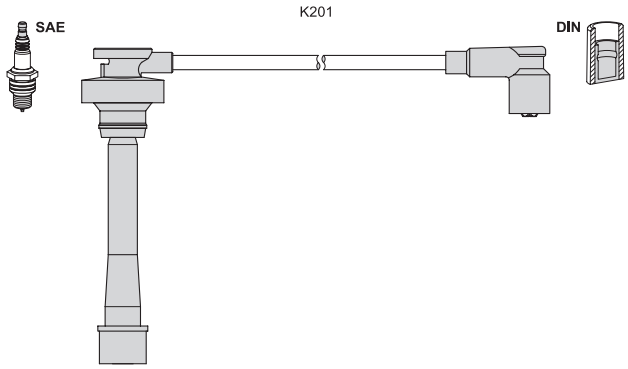

Mitsubishi Carisma (DA_) 1.6	07.95 - 04.96	66	4G92
1.6	12.98 - 12.99	70	4G92
1.8	07.95 - 04.96	85	4G93
Carisma Sedan (DA_) 1.6	12.98 - 12.99	70	4G92
Mirage 1.8 GTi	12.91 - 07.03	103	4G93
Mirage Sedan 1.8 GSi	12.91 - 08.95	103	4G93

T 504B ▶

T504B K202 23 37 44 72 74 79 -

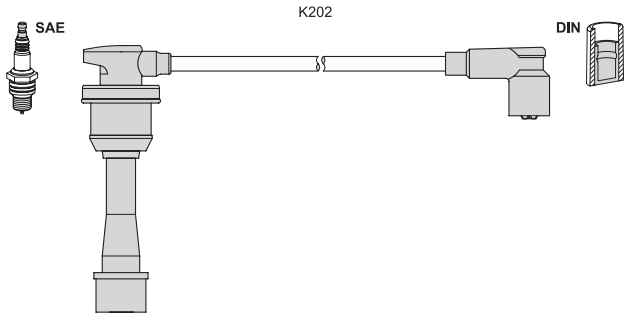

Mitsubishi Galant V 2.0 V6 24V	11.92 - 08.96	110	6A12
Galant V Sedan 2.0 V6 24V	11.92 - 08.96	110	6A12

T505B K203 37 47 59 62 -

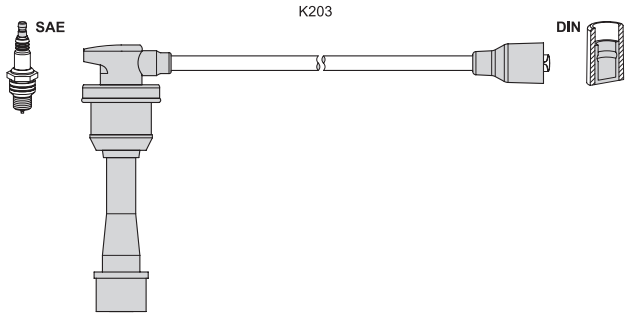

Mitsubishi Colt IV 1.8 GTi 16V	04.92 - 04.96	103	4G93
Lancer IV 1.8 GTi 16V	06.92 - 12.93	103	4G93
Lancer V (CB/D_A) 1.8 16V	06.92 - 12.93	103	4G93

T506B K196 65 60 45 K549 45 -

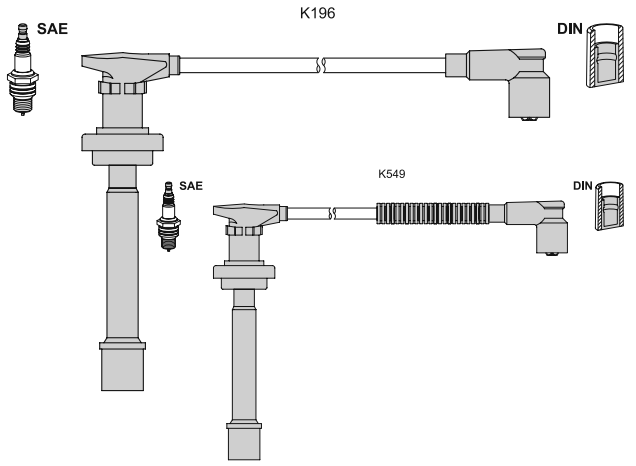

Nissan Almera I Hatch. 2.0 GTi	07.96 - 03.00	105	SR20DE
Almera Tino (V10) 2.0	08.00 -	100	SR20DE
Primera (P11) 2.0 16V	09.96 - 12.01	96	SR20DE
2.0 16V	09.96 - 12.01	85	SR20De
2.0 16V	09.96 - 12.01	110	SR20DE
2.0 16V	08.99 - 12.01	103	SR20DE
Primera Hatchback 2.0 16V	09.96 - 07.02	96	SR20DE
2.0 16V	09.96 - 07.02	85	SR20De
2.0 16V	09.96 - 07.02	110	SR20DE
2.0 16V	08.99 - 07.02	103	SR20DE
Primera Traveller 2.0 16V	06.96 - 12.01	85	SR20De
2.0 16V	04.98 - 12.01	96	SR20DE
2.0 16V	08.99 - 12.01	103	SR20DE

T507B K205 65 50 45 35 K061 55

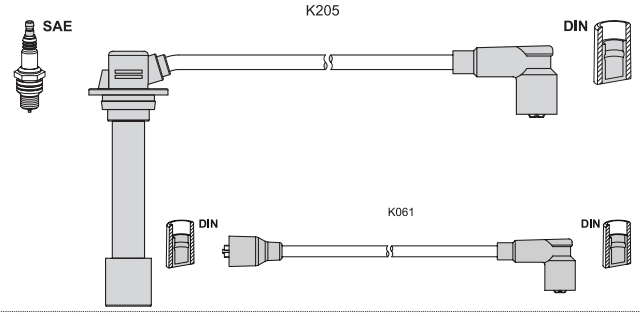

Mazda 626 III (GD) 2.0 12V	09.87 - 05.92	79	FE (12V)
2.0 16V	11.87 - 05.92	103	FE Kat. (16V)
2.0 16V	07.87 - 09.89	109	FE Kat. (16V)
626 III Coupe (GD) 2.0 12V	09.87 - 12.88	79	FE (12V)
2.0 16V	12.87 - 10.90	103	FE Kat. (16V)
2.0 16V	06.87 - 09.89	109	FE Kat. (16V)
626 III Hatchback 2.0 12V	11.87 - 05.92	79	FE (12V)
2.0 16V	11.87 - 10.90	103	FE Kat. (16V)
2.0 16V	06.87 - 08.89	109	FE Kat. (16V)
626 III Station Wagon 2.0 12V	09.87 - 01.90	81	FE (12V)
2.0 16V	01.88 - 03.92	103	FE Kat. (16V)

T508B K206-25 K199-20 + + -

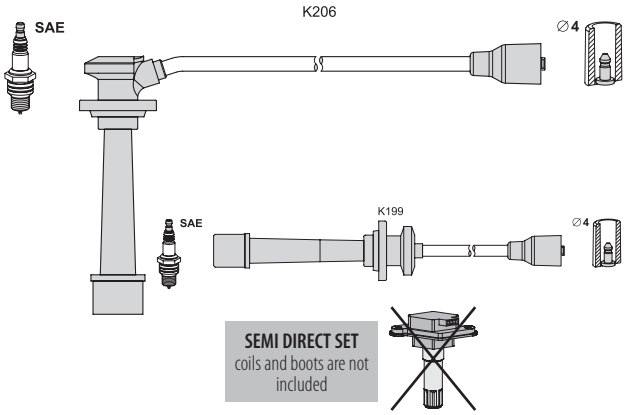

SEMI DIRECT SET
coils and boots are not included

Kia Carens I (FC) 1.8	11.00 - 07.02	81	T8
Carens II (FJ) 1.8	07.02 -	93	TB
Clarus (K9A) 1.8 i 16V	07.96 -	85	T8
Clarus Combi (GC) 1.8 i 16V	05.98 -	85	T8
Sephia (FA) 1.5 i 16V	02.96 - 10.97	59	B5
1.6 i	01.95 - 10.97	59	B6
1.8 i 16V	01.95 - 10.97	82	OK24N/OK26Y
Sephia Sedan (FA) 1.5 i 16V	02.96 - 10.97	59	B5
1.8 i 16V	01.95 - 10.97	82	OK24N/OK26Y
Shuma (FB) 1.5 i 16V	10.97 - 03.01	65	BFD, ZYVE
1.8 i 16V	10.97 - 03.01	81	T8
Shuma Sedan (FB) 1.5	03.96 - 12.98	59	OK280
1.5 i 16V	10.97 - 10.01	65	ZYVE, BFD
1.8 GX	05.99 - 10.01	85	
Shuma II (FB) 1.8	04.03 - 08.04	84	T8
Spectra 1.5 i 16V	99 - 03	65	
1.8 i 16V	01 - 08.04	84	

T509B K207 65 55 45 35 K458 55

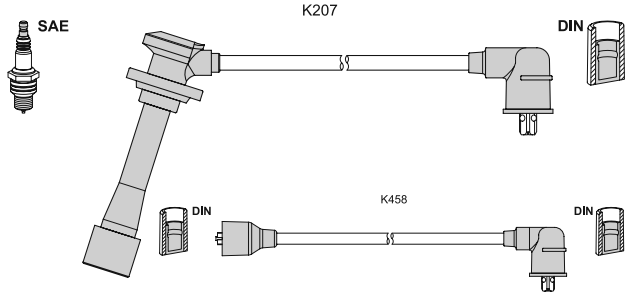

Kia Clarus (K9A) 2.0 i 16V	07.96 -	98	FE (16 V)
Clarus Combi 2.0 i 16V	05.98 -	98	FE (16 V)

T512B K505 60 55 40 40 K078 40

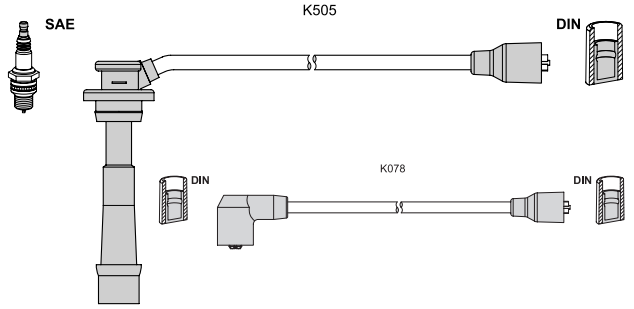

Suzuki Wagon R+ (EM) 1.0	02.98 - 05.00	48	K10A
1.2	02.98 - 05.00	51	K12A
1.2 4WD	02.98 - 05.00	51	

T513M K024 30 35 35 50 -

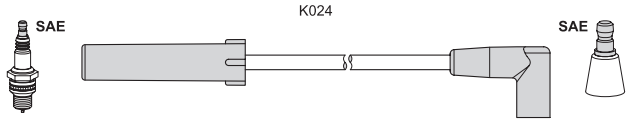

application → T394S

T514M K023 37 40 50 60 -

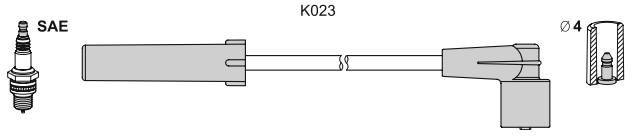

application → T395S

T516M K141 37 31 23 37 -

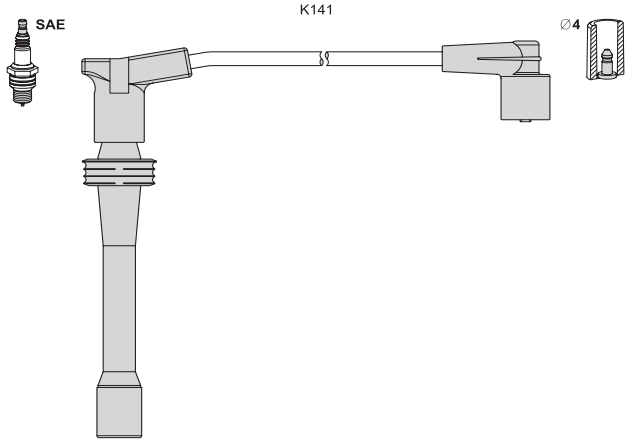

application → T774S

T517M K023 45 40 40 50 -

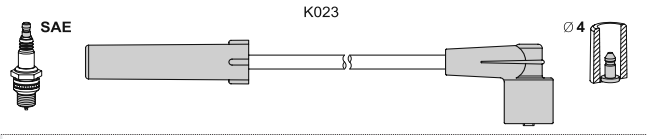

application → T867S

T518B K503 66 35 25 22 -

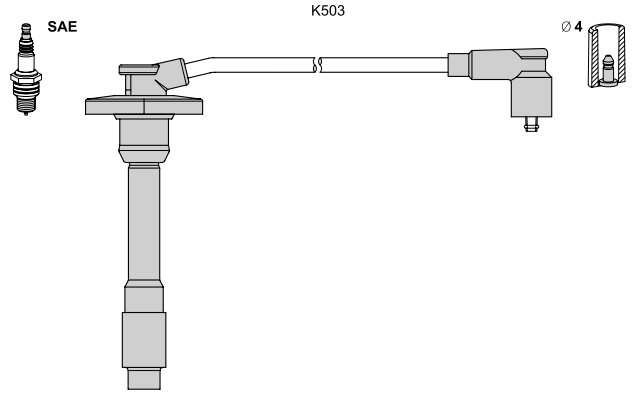

Toyota Avensis (_T22_) 1.6	09.97 - 10.00	74	4A-FE
1.6	09.97 - 10.00	81	4A-FE
1.8	09.97 - 10.00	81	7A-FE
Avensis Liftback 1.6	09.97 - 10.00	74	4A-FE
1.6	09.97 - 10.00	81	4A-FE
1.8	09.97 - 10.00	81	7A-FE
Avensis St. Wagon 1.6	09.97 - 10.00	74	4A-FE
1.6	09.97 - 10.00	81	4A-FE
1.8	09.97 - 10.00	81	7A-FE

T520B K210 32 37 52 56 K062 90

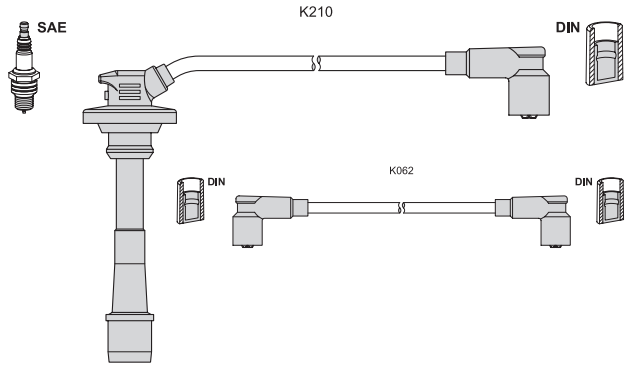

Toyota Carina II 1.6	12.87 - 03.92	72	4A-FE
1.6	12.87 - 03.92	75	4A-FE
Carina II Sedan 1.6	12.87 - 03.92	72	4A-FE
1.6	12.87 - 03.92	75	4A-FE
Carina II St. Wagon 1.6	12.87 - 03.92	72	4A-FE
1.6	12.87 - 03.92	75	4A-FE

T 521B ▶

T521B K210 33 37 52 55 -

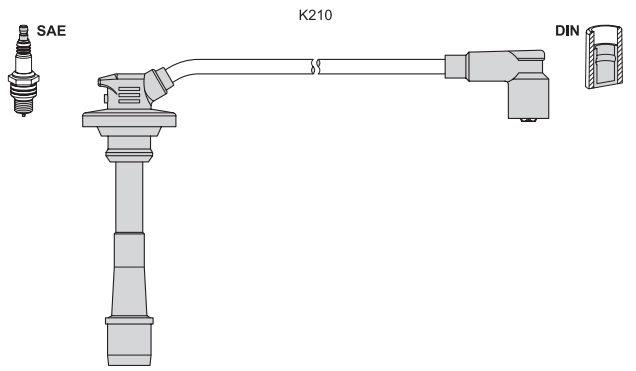

Toyota Carina II 1.6	12.87 - 11.89	66	4A-F
1.6	12.87 - 03.92	72	4A-FE
1.6	12.87 - 03.92	75	4A-FE
Carina II Sedan 1.6	12.87 - 08.90	66	4A-F
1.6	12.87 - 03.92	72	4A-FE
1.6	12.87 - 03.92	75	4A-FE
1.6 4WD	12.87 - 03.92	66	4A-FE
Carina II St. Wagon 1.6	12.87 - 12.89	66	4A-F
1.6	12.87 - 03.92	72	4A-FE
1.6	12.87 - 03.92	75	4A-FE
Celica Coupe 1.6 STI	10.89 - 11.93	77	4A-FE
Corolla (_E9_) 1.6	08.87 - 12.89	66	4A-F
1.6 GL 4WD	10.87 - 08.90	70	4A-F
1.6 i	11.89 - 06.93	77	4A-FE
1.6 i 4WD	10.87 - 08.90	77	4A-FE
1.6 XL	09.89 - 04.92	70	4A-F
Corolla Compact (E9) 1.6	08.87 - 04.92	66	4A-F
1.6 GL 4WD	10.87 - 08.90	70	4A-F
1.6 i	08.89 - 04.92	77	4A-FE
1.6 XL	09.89 - 04.92	70	4A-F
Corolla Liftback (E9) 1.6	08.87 - 04.92	66	4A-F
1.6	08.87 - 04.92	70	4A-F
1.6	08.89 - 04.92	77	4A-FE
1.6 4WD	09.89 - 05.92	77	4A-FE
Corolla Stat. Wag. (E9) 1.6	02.88 - 05.92	66	4A-F
1.6	12.87 - 04.92	70	4A-F
1.6 XLI	11.89 - 06.92	77	4A-FE
1.6 XLI 4WD	08.88 - 06.92	77	4A-FE

T522P K215 43 56 70 64 66 77 K158 41

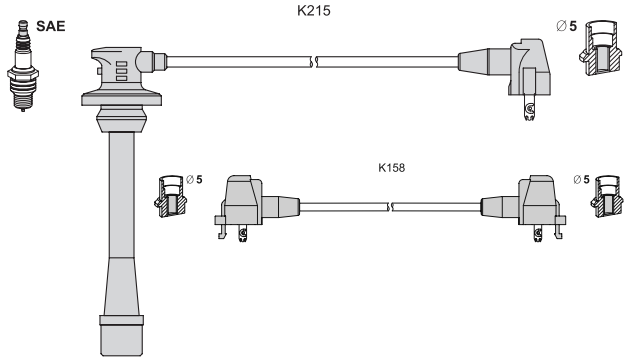

Lexus ES 300 (F1, F2) 3.0	09.91 - 12.97	138	3VZ-FE
Toyota Camry (_V1_) 3.0	06.91 - 08.96	138	3VZ-FE
Camry Station Wagon 3.0	03.92 - 07.96	138	3VZ-FE

T523B K204 45 40 31 22 -

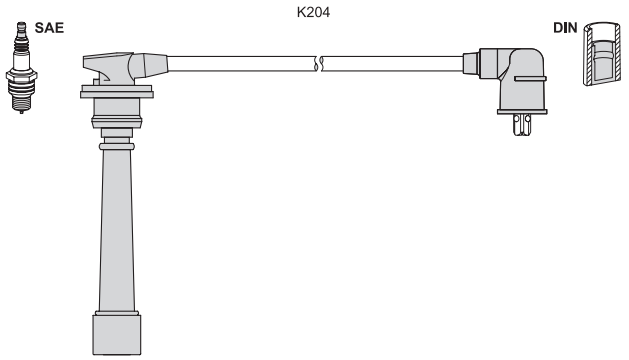

Hyundai Accent I 1.5 i 12V	10.94 - 01.00	65	G4EK DOHC
1.5i 16V (RUS)	12.96 - 01.00	73	G4ER
Accent II (LC) 1.5	09.00 - 11.05	75	G4EC-G
Accent III (MC) 1.4 GL	11.05 - 11.10	71	G4EE
Accent IV (RB) 1.4	11.10 -	79	G4FA
Accent Sedan (MC) 1.4 GL	11.05 - 11.10	71	G4EE
Accent Sed. (X-3) 1.5 i 12V	10.94 - 01.00	65	G4EK DOHC
1.5 i 16V	12.96 - 01.00	73	G4ER
Elantra (XD) 1.6	06.00 - 07.06	79	G4ED-G
Elantra Sedan (XD) 1.6	06.00 - 07.06	79	G4ED-G
Getz (TB) 1.4 i	08.05 - 06.09	71	G4EE
1.6	09.02 - 09.05	77	G4ED-G
1.6	08.05 - 06.09	78	G4ED-G
Matrix (FC) 1.6	06.01 - 08.10	76	G4ED-G
Kia Rio (DC_) 1.5 16V	09.02 - 02.05	71	A5D
Rio II (JB) 1.4 16V	03.05 -	71	G4EE
1.6 CVVT	03.05 -	82	G4ED
Rio II Sedan 1.4 16V	03.05 -	71	G4EE
1.6 16V	03.05 -	82	G4ED

T524B K217 53 46 43 38 K458 32

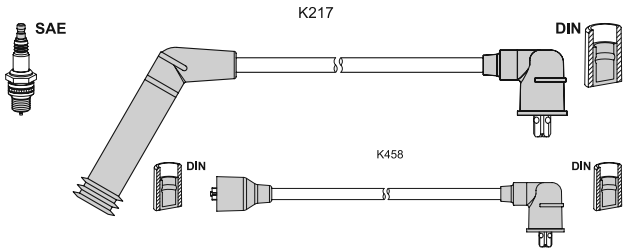

Hyundai Atos (MX) 1.0 i	02.98 - 08.00	40	G4HC
Atos Prime (MX) 1.0 i	08.99 - 08.00	40	G4HC

T527B K414 65 50 40 35 -

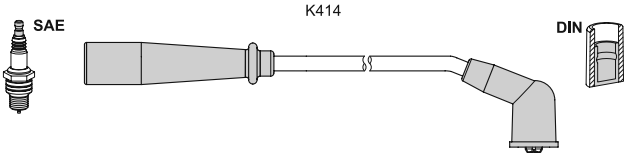

Kia Rio (DC_) 1.3	09.00 - 02.05	55	
1.3	08.02 - 02.05	60	
Rio Combi (DC) 1.3	08.00 - 02.05	55	
1.3	08.00 - 02.05	60	

T528M K022 30 25 35 50 -

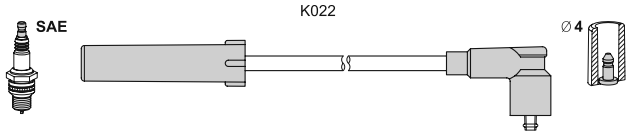

Lada Largus Combi (R90) 1.6i 8V	07.12 - 10.15	62	K7M
Largus Furgon (F90) 1.6i 8V	07.12 - 10.15	62	K7M

T530B K031-61 K220 57 46 35 K079 62

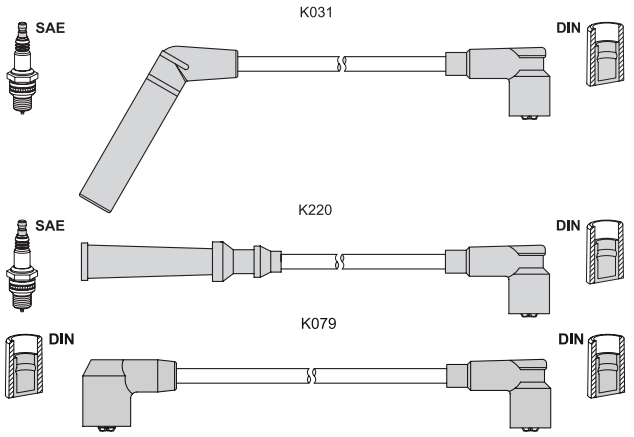

Nissan Prairie PRO 2.4 i	04.92 - 07.94	98	KA24E
2.4 i 4x4	04.92 - 07.94	98	KA24E

T531B K202 44 74 30 60 19 60 -

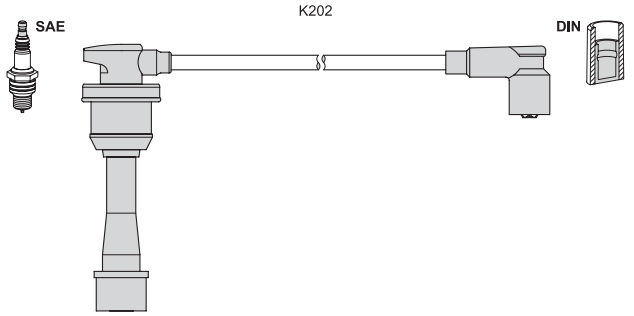

Mitsubishi 3000 GT 24V 4WD	06.92 - 08.99	210	6G72 (DOHC 24V)
Galant V (E_ _A) 2.5	11.92 - 09.96	125	6G73
2.5 V6 24V 4WD	11.92 - 08.96	125	6G73
Galant V Sed. 2.5 24V 4WD	11.92 - 08.96	125	6G73

T532B K031 33 40 47 K221 42 52 57 K079 25

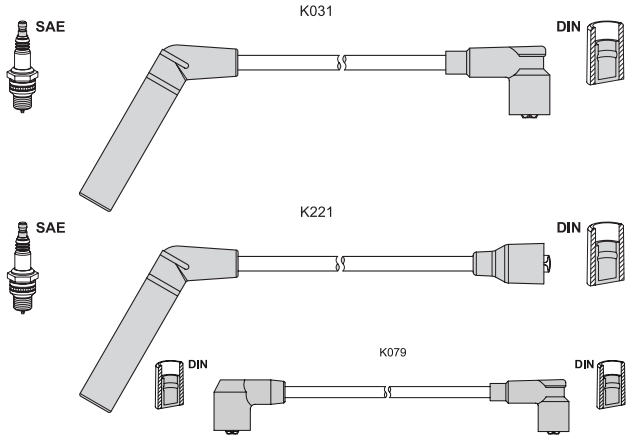

Mitsubishi Diamante Sed. 3.0	10.92 - 07.96	151	6G72 (DOHC 24V)
Sigma (F16A) 3.0 V6	12.90 - 07.96	130	6G72 (SOHC 12V)

< T532B

Mitsubishi Sigma (F16A) 3.0 V6	12.90 - 07.96	151	6G72 (DOHC 24V)
Sigma Station Wagon 3.0	06.92 - 10.96	125	6G72 (SOHC 12V)

T533P K222 45 30 + + -

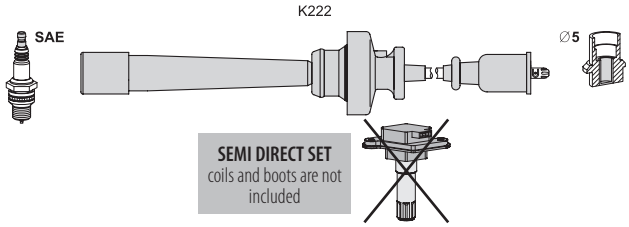

Mitsubishi Carisma 1.6	05.96 - 06.06	66	4G92
1.6	01.00 - 06.06	70	4G92
1.6	05.97 - 06.06	73	4G92
1.6	09.00 - 06.06	76	4G92
1.8	05.96 - 06.06	85	4G93
1.8 16V	07.95 - 06.06	103	4G93
Carisma Sedan 1.6	09.96 - 06.06	66	4G92
1.6	01.00 - 06.06	70	4G92
1.6	05.97 - 06.06	73	4G92
1.6	09.00 - 06.06	76	4G92
1.8	09.96 - 06.06	85	4G93
Colt IV (CA_) 1.6	03.96 - 04.96	66	4G92
Colt V (CJ_) 1600 1.6	09.00 - 09.03	76	4G92
1.6 GLX	05.96 - 09.00	66	4G92
Galant VI (EA_) 2.0	09.96 - 09.00	100	4G63 (SOHC 16V)
2.0	09.00 - 10.04	98	4G63 (SOHC 16V)
2.4 GDI	02.99 - 09.00	110	4G64 (GDI)
2.4 GDI	09.00 - 10.04	106	4G64 (GDI)
Galant VI Stat. Wag. 2.0	09.96 - 09.00	100	4G63 (SOHC 16V)
2.0	09.00 - 10.03	98	4G63 (SOHC 16V)
2.4 GDI	02.99 - 09.00	110	4G64 (GDI)
2.4 GDI	09.00 - 10.03	106	4G64 (GDI)
Grandis (NA_W) 2.4	04.04 -	121	4G69
Lancer VI (CJ-CP) 1.6 16V	12.95 - 08.03	66	4G92
Lancer Sedan (CS_) 2.0	12.03 -	99	4G63 (DOHC 16V)
2.0 16V EVO VIII	03.04 -	195	4G63 Turbo
2.0 16V EVO IX	01.06 -	206	4G63 Turbo
Outlander I (CU_) 2.4 4WD	05.03 - 10.06	102	4G64 (SOHC 16V)
2.4 4WD	11.03 - 10.06	118	4G69
2.4 4WD	05.03 - 10.06	119	4G69
Pajero II Canvas Top 1.8 GDI	06.98 - 04.00	96	4G93 (GDI)
Pajero Pinin 1.8	11.01 - 06.07	84	4G93
1.8 GDI	10.99 - 06.07	88	4G93 (GDI)
Space Runner (N6_W) 2.0	08.99 - 08.02	100	4G63 (DOHC 16V)
Space Star (DG_A) 1.8 GDI	06.98 - 12.04	87	4G93 (GDI)
1.8 GDI	06.98 - 12.04	90	4G93 (GDI)
1.8 MPI	10.02 - 12.04	82	4G93
Space Wagon (N3_) 2.0	10.92 - 10.98	98	4G63 (DOHC 16V)
2.0 4WD	10.92 - 10.98	98	4G63 (DOHC 16V)
Space Wagon (N9_) 2.0 GDI	04.02 - 12.04	98	4G63 (DOHC 16V)
2.4 GDI	10.98 - 12.04	110	4G64 (GDI)
2.4 GDI	09.00 - 12.04	108	4G64 (GDI)
2.4 GDI 4WD	10.98 - 12.04	110	4G64 (GDI)
2.4 GDI 4WD	09.00 - 12.04	108	4G64 (GDI)
Proton Impian 1.6	09.01 -	76	4G 18P

T 535B ▶

T535B K031 70 60 60 50 50 50 K061 20

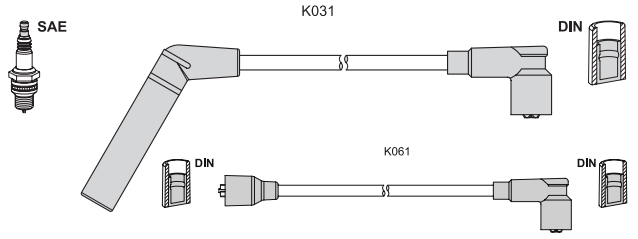

Mitsubishi L 200 3.0 4WD	11.86 - 05.92	107	6G72 (SOHC 12V)
Pajero I 3.0 V6	11.88 - 11.90	104	6G72 (SOHC 12V)
Pajero II 3.0 V6 4WD	12.90 - 12.95	110	6G72 (SOHC 12V)
Pajero II Canvas Top 3.0 V6	12.90 - 12.95	110	6G72 (SOHC 12V)

T536B K223 60 60 45 K224 50 40 35 -

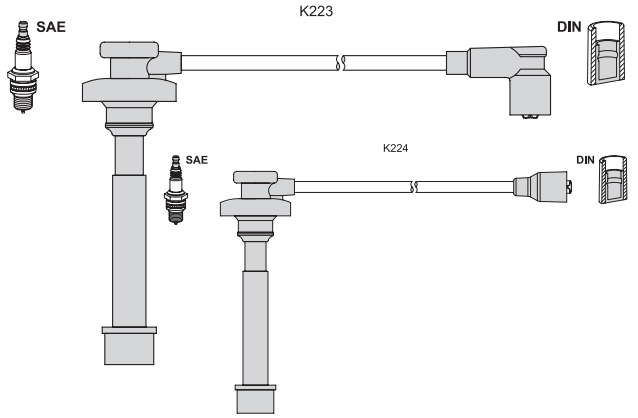

Mitsubishi Pajero II 3.0 V6 24V	06.94 - 05.97	133	6G72 (SOHC 24V)
3.0 V6 24V	06.97 - 10.99	130	6G72 (SOHC 24V)
Pajero II Can. Top 3.0 24V	06.94 - 04.00	133	6G72 (SOHC 24V)

T537P K225 105 90 80 + + + -

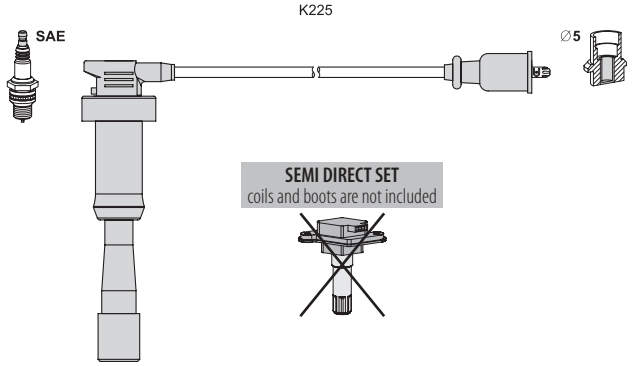

Kia Sorento (JC) 3.5 V6	08.02 -	143	G6CU
Mitsubishi Pajero II 3.5 24V	06.94 - 05.97	153	6G74 (DOHC/SOHC)
3.5 V6 24V	07.97 - 10.99	143	6G74 (DOHC/SOHC)
Pajero III Can. Top 3.5 GDI	04.00 - 12.06	149	6G74 (DOHC/SOHC)

T538B K201 26 40 42 55 K061 22

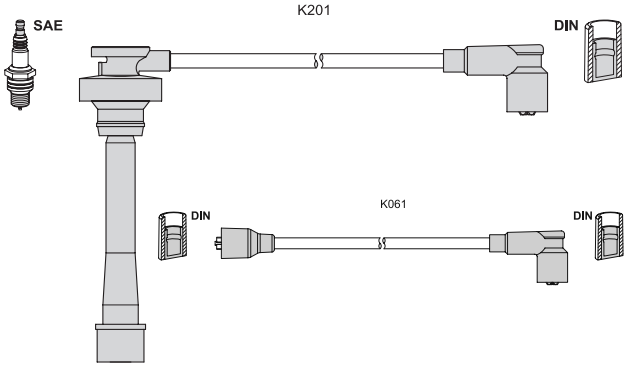

Mitsubishi L 200 (K__T) 2.0	06.96 - 12.07	90	4G63 (SOHC 8V)
2.4 4WD	06.96 - 12.07	97	4G64 (SOHC 16V)
L 300 Flatbed (P1_T) 2.0	07.94 - 04.00	85	4G63 (DOHC 16V)
L 400/Sp. Gear Bus 2.4i 4WD	05.95 - 05.00	97	4G64 (SOHC 16V)
Space Wagon 2.0 4WD	03.85 - 04.91	75	4G63 (SOHC 8V)
2.0 GLX	06.86 - 05.88	62	G63B
2.0 GLX 4WD	06.86 - 05.88	62	G63B

T539P K227 40 25 + + -

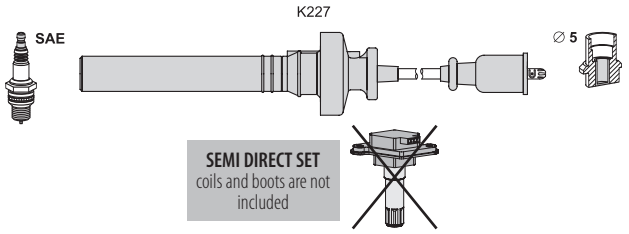

Mitsubishi Carisma Sedan 1.3	09.00 - 10.04	55	4G13 (12V)
Colt V (CJ_A) 1.3	09.00 - 09.03	60	4G13 (16V)
1.3 GL,GLX	05.96 - 09.00	55	4G13 (12V)
Lancer Combi (CS_W) 1.6	09.03 - 10.08	72	4G18
Lancer Sedan (CS_A) 1.3	09.03 -	60	4G13 (16V)
1.6	09.03 -	72	4G18
Space Star (DG_A) 1.3 16V	06.98 - 12.04	63	4G13 (16V)
1.3 16V	12.98 - 12.04	61	4G13 (16V)
1.3 16V	09.00 - 12.04	60	4G13 (16V)
1.6 16V	01.01 - 12.04	72	4G18

T540B K228 65 50 47 40 K062 27

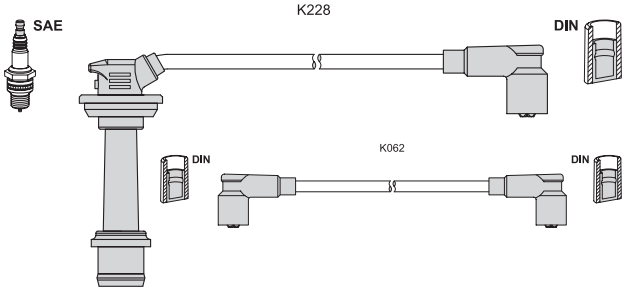

Toyota Celica Coupe 2.0 T 4x4	03.88 - 08.89	136	3S-GTE
2.0 Turbo 4WD	10.89 - 11.93	150	3S-GTE
2.0 Turbo 4WD	10.89 - 11.93	153	3S-GTE

T541B K333 37 49 57 67 K316 45

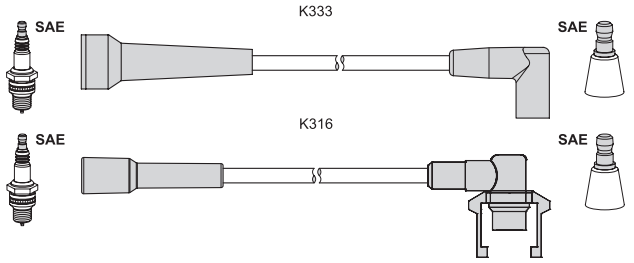

Renault 19 II (B/C53_) 1.8	04.92 - 12.95	65	F3P 706/_ 707/_ 760
1.8	04.92 - 12.95	66	F3P 706/F3P 760
1.8	05.94 - 12.95	79	F3P 765/F3P 682
19 II Cabriolet 1.8	04.92 - 06.96	65	F3P 704/_ 706/F3P_
1.8	09.93 - 06.96	66	F3P 706/F3P 760
1.8	12.95 - 06.96	79	F3P 765/_682/_764
19 II Chamade (L53_) 1.8	04.92 - 12.95	65	F3P 704/_ 706/F3P_
1.8	04.92 - 12.95	66	F3P 706/F3P 760
1.8	05.94 - 12.95	79	F3P 682
Clio I (B/C57_, 5/357_) 1.8	12.95 - 09.98	65	F3P 710 /F3P 714
1.8	08.94 - 09.98	66	F3P 755 /F3P 754
1.8 Rsi	12.95 - 09.98	79	F3P 758

T542B K230 68 58 56 43 K062 26

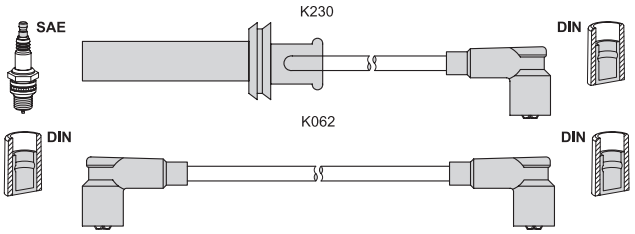

Fiat Coupe (FA/175) 2.0 16V	11.93 - 08.96	102	836 A3.000
Tipo 1.8 i.e.16V Sport	11.89 - 06.92	100	160 A5.000
2.0 16V	07.91 - 04.95	107	160 A8.046
2.0 i.e. 16V Sport	03.93 - 04.95	102	836 A3.000
Lancia Dedra (835) 2.0 16V	07.94 - 07.99	102	836 A3.000
Dedra S.W. (835) 2.0 16V	07.94 - 07.99	102	836 A3.000
2.0 Integrale	07.94 - 07.99	102	836 A3.000
Delta II (836) 2.0 16V	06.93 - 08.99	102	836 A3.000

T543B K230 63 61 61 63 -

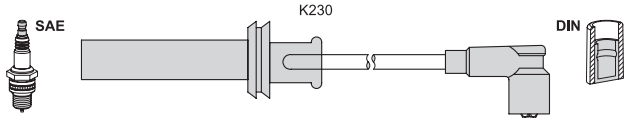

Fiat Coupe 2.0 16V Turbo	11.93 - 08.96	140	175 A1.000
Lancia Delta I 2.0 16V HF Integr.	06.93 - 01.94	155	831 E5.046/_E5.000
Delta II (836) 2.0 16V Turbo	06.93 - 08.99	137	836 A2.000
2.0 16V Turbo	07.96 - 08.99	142	175 A4.000
Thema (834) 2.0 16V Turbo	12.88 - 06.90	133	834 C1.000
2.0 i.e. 16V	05.88 - 08.92	108	834 B2.000
2.0 i.e. 16V	02.89 - 05.92	104	834 B2.246
2.0 i.e. 16V Turbo	04.89 - 05.92	130	834 C1.246
Thema S.W. 2.0 i.e. 16V	05.89 - 08.92	108	834 B2.000
2.0 i.e. 16V	02.89 - 05.92	104	834 B2.246
2.0 i.e. 16V Turbo	12.88 - 06.90	133	834 C1.000
2.0 i.e. 16V Turbo	04.89 - 03.93	130	834 C1.246

T544B K188 75 35 90 60 -

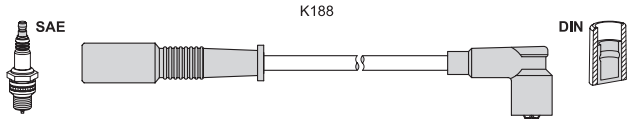

Fiat Palio (178BX) 1.5	06.04 -	62	178 E5.022
Palio Weekend 1.5	02.02 -	62	178 E5.022
Siena (178_) 1.5	06.04 -	62	178 E5.022

T545B K229 70 65 45 35 -

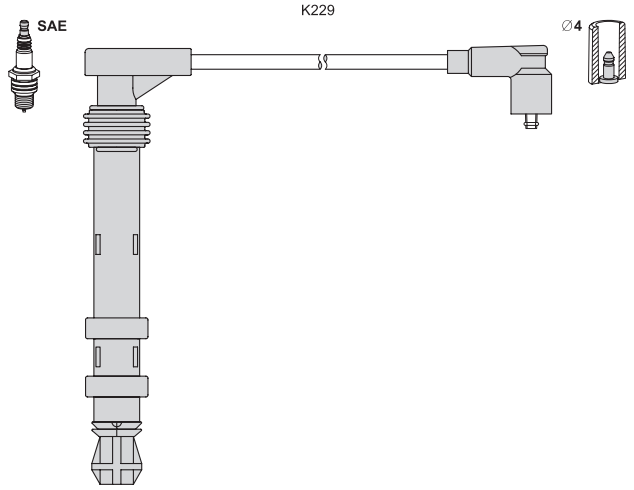

Fiat Palio Sport 1.6 16V	10.01 -	76	178E7.000

T547B K232 32 40 55 63 -

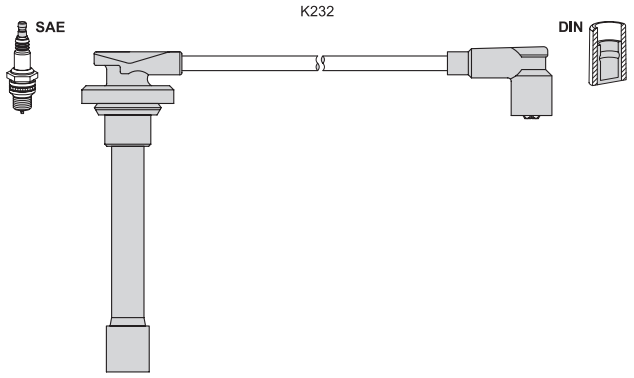

Honda Accord VII 2.2 Type-R	02.99 - 12.02	156	H22A7
Prelude IV 2.2 i 16V Vtec	02.93 - 09.96	136	H22A2
Prelude V (BB) 2.2 16V	10.96 - 10.00	136	H22A5
2.2 16V	10.96 - 10.00	147	H22A5

T548G K233 38 29 35 79 95 102 -

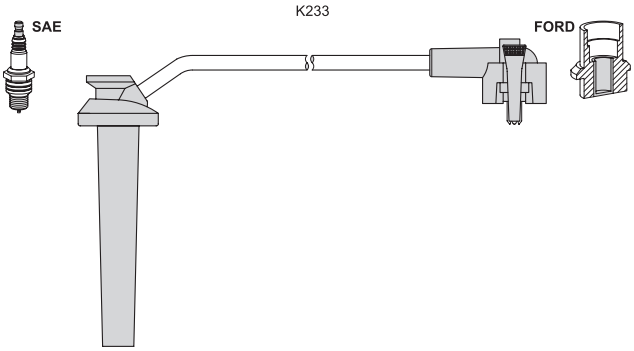

Ford Cougar (EC_) 2.5 ST 200	01.00 - 12.01	151	SGA
2.5 V6 24V	08.98 - 12.01	125	LCBA

T 548G ▶

< T548G			
Ford Cougar (EC_) 2.5 V6 24V	06.00 - 12.01	125	LCBC/LCBB/LCBE
Mondeo I (GBP) 2.5 i 24V	07.94 - 08.96	125	SEA
Mondeo II (BAP) 2.5 24V	09.96 - 11.00	125	SEA
2.5 24V	06.00 - 11.00	125	SEB/SEC
2.5 ST 200	05.99 - 11.00	151	SGA
Mondeo II Combi 2.5 24V	09.96 - 11.00	125	SEA
2.5 24V	10.99 - 11.00	125	SEB/SEC
2.5 ST 200	05.99 - 11.00	151	SGA
Mondeo II Sedan 2.5 24V)	09.96 - 11.00	125	SEA
2.5 24V	06.00 - 11.00	125	SEB/SEC
2.5 ST 200	05.99 - 11.00	151	SGA
MPV II (LW) 2.5	11.99 - 09.03	125	GY-DE

T549G K234 31 34 37 76 90 96 -

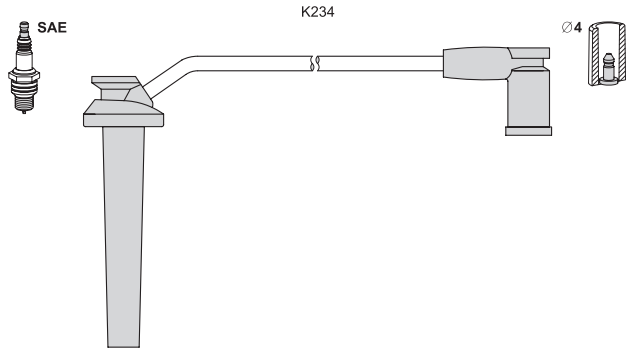

Ford Mondeo II (BAP) 2.5 24V	06.00 - 11.00	125	SEB/SEC
Mondeo II Combi 2.5 24V	10.99 - 11.00	125	SEB/SEC
Mondeo II Sedan 2.5 24V	06.00 - 11.00	125	SEB/SEC
Mondeo III (B5Y) 2.5 24V	11.00 - 08.07	125	LCBD
Mondeo III Combi 2.5 24V	11.00 - 08.07	125	LCBD
Mondeo III Sedan 2.5 24V	11.00 - 08.07	125	LCBD
MPV II (LW) 2.5	11.99 - 09.03	125	GY-DE

T550B K235 63 58 40 33 K061 88

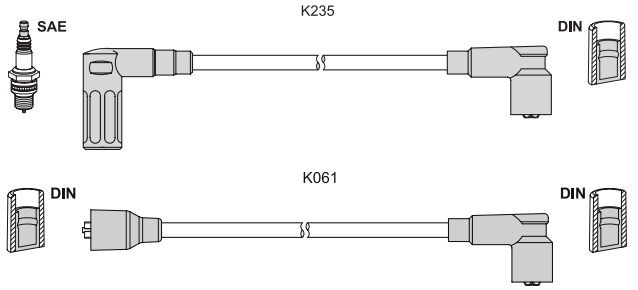

Lancia Dedra (835) 1.6 i.e.	08.89 - 03.93	57	835 A1.046
1.6 i.e.	08.89 - 06.94	66	835 A1.000
Delta I (831AB0) 1.5	09.79 - 10.82	63	831 A1.000/_B1.000

T551B K188 31 K533 28 38 43 -

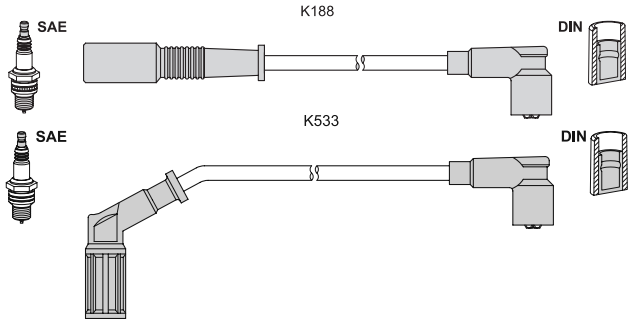

Fiat Tempra (159) 1.8 i.e.	09.93 - 08.96	66	835 C4.000
1.8 i.e	09.93 - 08.96	76	835 C2.000

< T551B			
Fiat Tempra (159) 1.8 i.e	10.94 - 08.96	74	836 A5.000
Tempra S.W. 1.8 i.e.	09.93 - 08.96	66	835 C4.000
1.8 i.e	09.93 - 08.96	76	835 C2.000
1.8 i.e	10.94 - 08.96	74	836 A5.000
Tipo (160) 1.8 i.e.	09.93 - 04.95	66	835 C4.000
1.8 i.e	03.93 - 04.95	71	836 A5.000
1.8 i.e	04.93 - 04.95	76	835 C2.000
1.8 i.e	10.94 - 04.95	74	159 A4.000
Lancia Dedra (835) 1.8 16V LE	07.94 - 07.99	74	836 A5.000
1.8 i.e	03.96 - 07.99	83	182 A2.000
Dedra S.W. 1.8 16V LE	03.96 - 07.99	83	182 A2.000
1.8 i.e	07.94 - 07.99	74	836 A5.000
Delta II (836) 1.8 i.e.	07.94 - 08.99	66	835 C4.000/836 _
1.8 i.e	12.94 - 08.99	76	835 C2.000
1.8 i.e. 16V	03.96 - 08.99	83	182 A2.000
1.8 i.e. 16V GT	03.96 - 08.99	96	183 A1.000

T552C K236 29 43 58 67 - alternative T013B

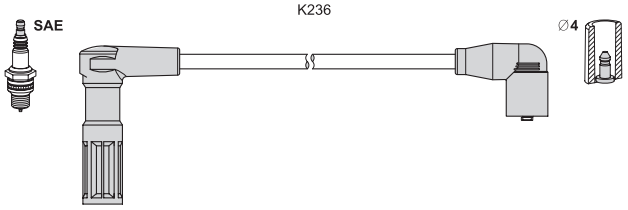

Citroen Jumpy (U6U) 1.6	10.95 -	58	220 A2.000/1580 SPI
Jumpy Van (B_ _) 1.6 i	10.95 -	58	220 A2.000/1580 SPI
Fiat Pick Up (146) 1.4	05.94 - 05.01	49	146 D5.000
Fiorino 70 Van 1.4 i.e.	11.96 - 05.01	49	146 C5.000/_D5.000
Fiorino 75 Van 1.6 i.e.	10.93 - 05.01	55	146 D6.000/_C6.000
Scudo Combinato 1.6	02.96 - 12.06	58	220 A 2.000
Tempra (159) 1.4 i.e.	03.92 - 08.96	51	836 A4.000
1.6 i.e.	06.92 - 08.96	55	835 C1.000
1.6 i.e.	06.94 - 08.96	66	159 B9.000
Tempra S.W. 1.4 i.e.	10.92 - 08.96	51	836 A4.000
1.6 i.e.	10.90 - 08.96	57	835 C1.000
1.6 i.e.	10.92 - 08.96	55	835 C1.000
1.6 i.e.	06.94 - 08.96	66	159 B9.000
Tipo (160) 1.4 i.e.	05.89 - 04.95	51	836 A4.000
1.6 i.e.	10.92 - 04.95	55	835 C1.000
Lancia Dedra (835) 1.6 i.e.	04.93 - 07.99	55	835 C1.000
Delta II (836) 1.4 i.e.	10.94 - 08.99	51	836 A4.000
1.6 i.e.	06.93 - 08.99	55	835 C1.000
Peugeot Expert (224) 1.6	02.96 -	58	222A2 (1580 SPI)
Expert Flatbed (223) 1.6	02.96 -	58	222A2 (1580 SPI)
Expert Van (222) 1.6	02.96 -	58	222A2 (1580 SPI)

T553B K032 50 45 40 40 -

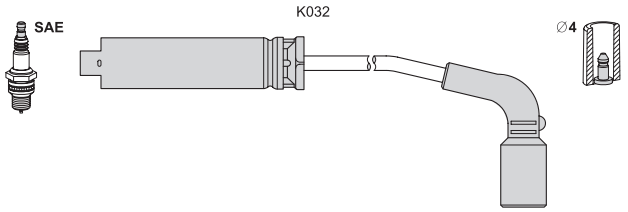

Daewoo Rezzo (KLAU) 1.8	09.00 -	67	F18D2
1.8	09.00 -	72	A18DMS
1.8	09.00 -	74	F18S2
Tacuma (KLAU) 1.8	09.00 -	67	F18D2
1.8	09.00 -	72	A18DMS
1.8	09.00 -	74	F18S2

T554B K238 31 36 51 66 -

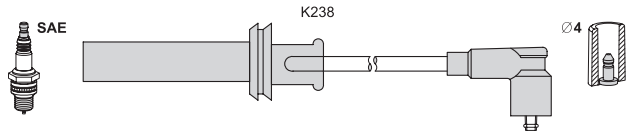

Fiat Croma 2000 (154) 2.0 16V	08.92 - 08.96	101	154 E1.000
Lancia Kappa 2.0 16V Turbo	02.95 - 10.01	151	838 A4.000
Kappa Coupe 2.0 16V Turbo	11.96 - 03.01	151	838 A4.000
Kappa S.W. 2.0 16V Turbo	07.96 - 10.01	151	838 A4.000
Thema 2000 (834) 2.0 16V	08.92 - 12.93	112	834 F1.000
2.0 16V Turbo	10.92 - 07.94	148	834 F2.000
Thema S.W. 2000 2.0 16V	05.92 - 07.94	112	834 F1.000
2.0 16V Turbo	11.92 - 07.94	148	834 F2.000

T555B K550 40 30 20 15 -

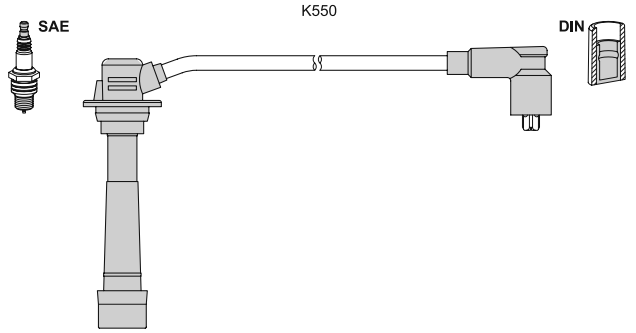

Mazda MX-5 I (NA) 1.6	05.90 - 01.94	85	B64F
1.6	01.95 - 04.98	66	
1.8	02.94 - 04.98	96	BPF1 /BP (DOHC)
1.8	09.93 - 12.97	96	BPF1
MX-5 II (NB) 1.6 16V	05.98 - 10.05	81	B6D
1.8 16V	05.98 - 10.05	103	BP-ZE

T556B K153 35 46 51 K548 61 -

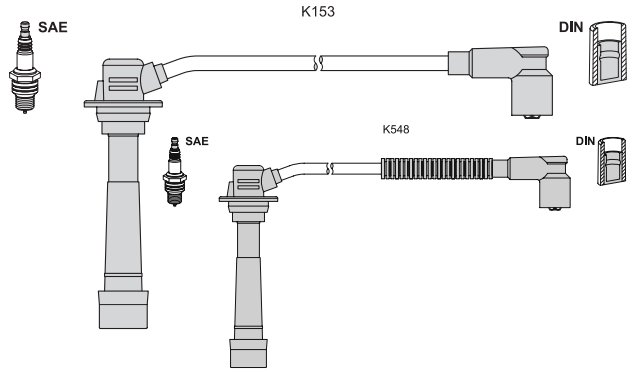

Mazda 323 III (BF) 1.5	08.85 - 05.89	55	E5
323 III Hatchback (BF) 1.5	08.85 - 05.89	55	E5
323 III Station Wagon 1.5	05.86 - 05.89	55	B50/B53/E5
323 C V (BA) 1.8 16V	08.94 - 09.98	84	BP-ZE
323 F V (BA) 1.8 16V	08.94 - 09.98	84	BP-ZE
323 S V (BA) 1.8 16V	08.94 - 09.98	84	BP-ZE
MX-3 (EC) 1.6 i	01.94 -	79	B6D

T557B K220 59 51 39 27 62 54 43 34 K062 30 35

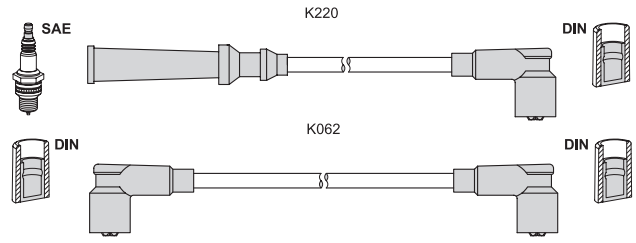

Nissan Prairie Pro (M11) 2.0 i	10.88 - 04.92	72	CA20E
2.0 i 4x4	10.88 - 12.92	72	CA20E

T558B K038 53 32 K164 54 32 K066 50

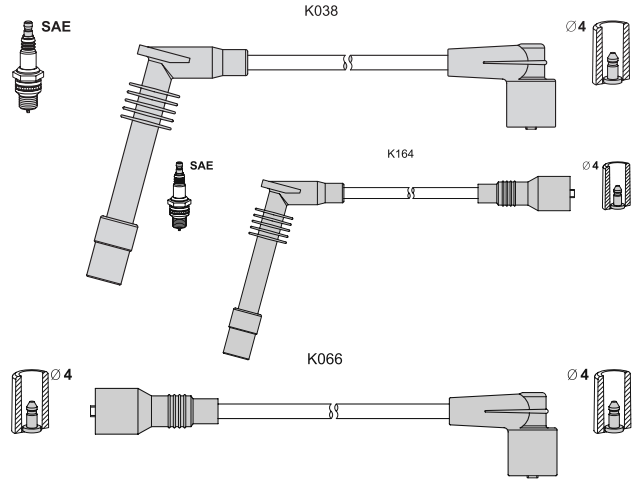

Opel/Vauxhall Astra F 1.6	09.95 - 09.98	55	16 NZR/16 LZ2
2.0 i	03.92 - 09.98	85	C 20 NE
Astra F Cabriolet 2.0 i	03.93 - 10.94	85	C 20 NE
Astra F Caravan 1.6	09.95 - 01.98	55	16 LZ2
2.0 i	09.91 - 07.94	85	C 20 NE
Astra F CC 1.6	09.95 - 01.98	55	16 NZR/16 LZ2
2.0 i	09.91 - 01.98	85	C 20 NE

T559C K240 82 76 75 74 -

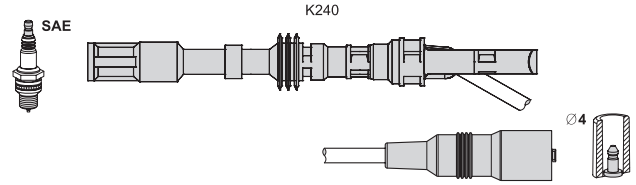

Audi A3 (8L1) 1.8	09.00 - 05.03	92	AGN/APG
Seat Leon (1M1) 1.8 20V	11.99 - 06.06	92	AGN/APG
Toledo II (1M2) 1.8 20V	04.99 - 05.06	92	AGN/APG
Skoda Octavia (1U2) 1.8	09.96 - 07.00	92	AGN
Octavia Combi 1.8 20V	07.98 - 07.00	92	AGN
VW Bora (1J2) 1.8	10.98 - 05.05	92	AGN
1.8 4motion	02.99 - 05.05	92	AGN
Bora Combi 1.8 4motion	05.99 - 05.05	92	AGN
Golf IV (1J1) 1.8	08.97 - 06.05	92	AGN
1.8 4motion	05.98 - 06.05	92	AGN
Golf IV Variant 1.8 4mot.	05.99 - 06.06	92	AGN

T 560B ▶

T560B K183 57 59 38 40 K061 50

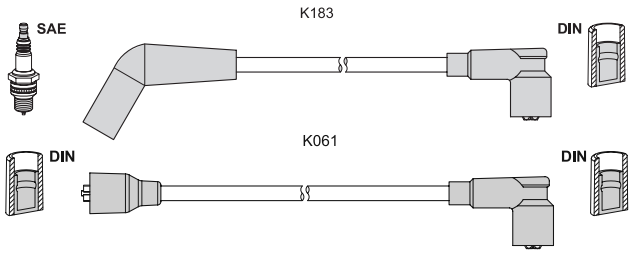

Rover 100 (Metro) 111 1.1	03.90 - 12.98	44	11 K2D/11 K2A

T561B K108 50 43 33 29 K061 50

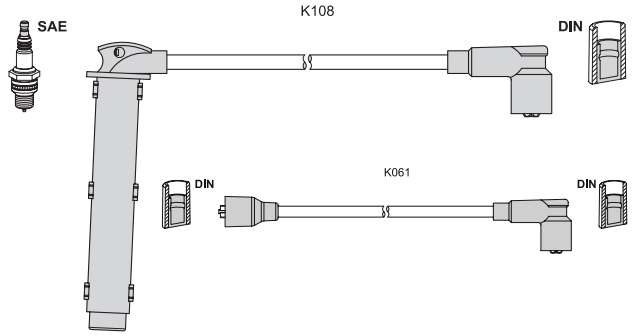

Rover 100 (Metro) 114 1.4 GSi	10.94 - 10.95	76	14 K4F
1.4 GTi 16V	03.90 - 08.91	69	14 K4C/14 K4D
1.4 GTi 16V	08.91 - 12.98	76	14 K4F
1.4 GTi/GT 16V cat	03.90 - 12.98	66	14 K4C/14 K4D
Cabriolet 114 (XP) 1.4	03.97 - 10.98	75	14 K4F
Cabriolet 214 1.4 i 16V	01.93 - 11.99	76	14 K4F

T562B K183 57 59 38 40 K061 80

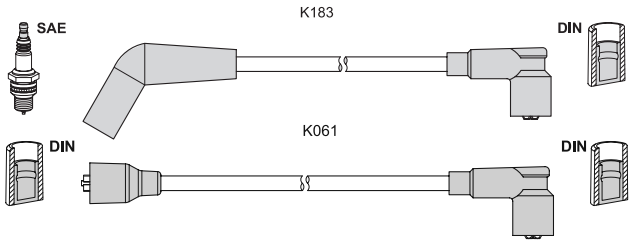

Rover 200 (RF) 1.4	01.96 - 12.97	66	14 K4D
214 Hatchback (XW) 1.4	09.93 - 10.95	55	14 K2D/14 K2A
1.4 Si/GSi	10.89 - 10.95	66	14 K4C/14 K4D
400 (XW) 414 1.4 GSi/Si	04.90 - 04.95	66	14 K4C/14 K4D
414 1.4 GSi/Si cat	01.93 - 04.95	76	14 K4F
Cabriolet 214 (XW) 1.4	01.92 - 11.99	66	14 K4C/14 K4D

T563B K183 57 59 38 40 K012 45

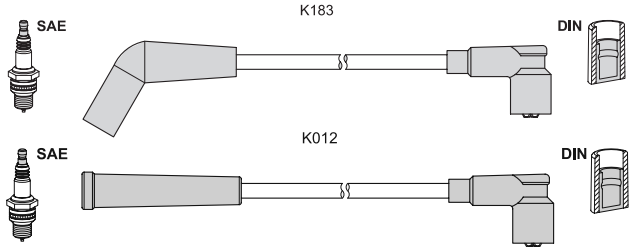

Rover 100 (Metro) 114 1.4	03.90 - 12.98	55	14 K2D/14 K2A
Cabriolet 111 (XP) 1.1	04.94 - 10.97	44	11 K2D
Cabriolet 114 (XP) 1.4	04.94 - 10.97	55	14 K2D/14 K2A
200 (RF) 211 1.1	01.98 - 03.00	44	11 K2D
1.4 i	11.95 - 03.00	55	14 K2F

T564B K108 50 43 33 30 K012 45

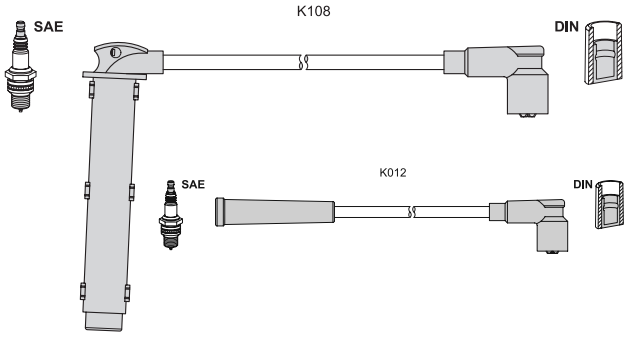

MG MG TF 115 1.6	03.02 -	85	16 K4F
MG TF 120 1.8	03.02 -	88	18 K4F
MG TF 135 1.8	03.02 -	100	18 K4F
MG ZR 105 1.4	06.01 - 04.05	76	14 K4F
MG ZR 120 1.8	06.01 - 04.05	86	18 K4F
MGF (RD) 1.6	02.00 - 03.02	82	16 K4F
1.8 i 16V	03.95 - 03.02	88	18 K4F
Rover 25 (RF) 1.4 16V	10.99 - 05.05	62	14 K4M
1.4 16V	10.99 - 05.05	76	14 K4F
1.6 16V	10.99 - 05.05	80	16 K4F
1.8 16V	10.99 - 05.05	85	18 K4F
200 (RF) 214 1.4 Si	11.95 - 03.00	76	14 K4F
216 (RF) 1.6 Si	11.95 - 03.00	82	16 K4F
400 (RT) 414 1.4 Si	05.95 - 03.00	76	14 K4F
416 (RT) 1.6 Si	05.95 - 03.00	82	16 K4F
1.6 Si	05.95 - 03.00	83	D 16 Y2
414 Hatchback (RT) 1.4	03.96 - 12.97	55	14 K2F
1.4 Si	05.95 - 03.00	76	14 K4F
416 Hatchback (RT) 1.6 Si	05.95 - 03.00	82	16 K4F
1.6 Si	06.95 - 03.00	83	D 16 Y2
416 Tourer (XW) 1.6 i	05.94 - 11.98	82	D 16 Z2
1.6 i	05.94 - 11.98	90	D 16 A8
Cabriolet 216 1.6 i 16V	01.96 - 11.99	82	16 K4F
Coupe 1.6 16 V	03.96 - 11.99	82	16 K4F

T565B K241 30 30 + + -

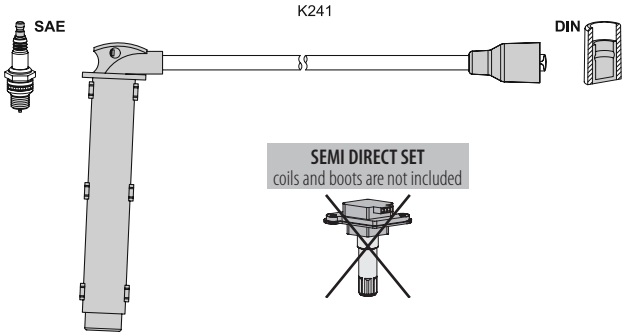

Landrover Freelander 1.8 16V	11.00 - 10.06	86	18 K4F
Freelander S. Top 1.8 i 16V	02.98 - 10.06	88	18 K4F
MG MG TF 115 1.6	03.02 -	85	16 K4F
MG TF 120 1.8	03.02 -	88	18 K4F
MG TF 135 1.8	03.02 -	100	18 K4F
MG TF 160 1.8	03.02 -	118	18 K4K
MG ZR 105 1.4	06.01 - 04.05	76	14 K4F
MG ZR 120 1.8	06.01 - 04.05	86	18 K4F
MG ZR 160 1.8	06.01 - 04.05	118	18 K4K
MG ZS 120 1.8	07.01 - 04.05	86	18 K4F
MG ZS 120 Hatchback 1.8	07.01 - 10.05	86	18 K4F
MGF (RD) 1.8 i 16V	03.95 - 03.02	88	18 K4F
1.8 i VVC	03.95 - 03.02	107	18 K4K
1.8 i VVC	10.01 - 03.02	118	18 K4K
Rover 25 (RF) 1.4 16V	10.99 - 05.05	62	14 K4M
1.4 16V	10.99 - 05.05	76	14 K4F

< T565B

Rover 25 (RF) 1.6 16V	10.99 - 05.05	80	16 K4F
1.8 16V	10.99 - 05.05	85	18 K4F
1.8 16V	02.00 - 05.05	107	18 K4K
45 (RT) 1.4	02.00 - 05.05	76	14 K4F
1.6	02.00 - 05.05	80	16 K4F
1.8	02.00 - 05.05	86	18 K4F
45 Sedan (RT) 1.4	02.00 - 05.05	76	14 K4F
1.6	02.00 - 05.05	80	16 K4F
1.8	02.00 - 05.05	86	18 K4F
75 (RJ) 1.8	02.99 - 05.05	88	K 1.8
1.8 Turbo	05.03 - 05.05	110	18 K4G
75 Tourer (RJ) 1.8	08.01 - 05.05	88	K 1.8
1.8 Turbo	05.03 - 05.05	110	18 K4G
200 (RF) 214 1.4 Si	11.95 - 03.00	76	14 K4F
216 (RF) 1.6 Si	11.95 - 03.00	82	16 K4F
218 (RF) 1.8 K Vi	11.95 - 03.00	107	18 K4K
400 Tourer (XW 1.8 i	06.96 - 11.98	107	18 K4K
Cabriolet 214 1.4 i 16V	01.93 - 11.99	76	14 K4F

T567B K243 33 96 48 86 60 96 -

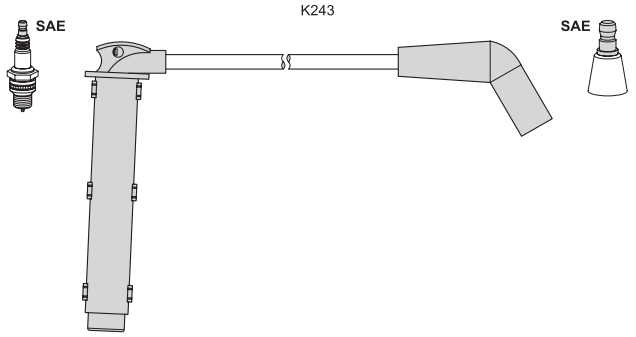

Rover 825 (XS) 2.5 Si Lux (RS)	04.96 - 02.99	129	25 K4F
825 Coupe 2.5 Si (RS)	04.96 - 02.99	129	25 K4F
825 Hatchback (XS) 2.5	02.96 - 10.98	129	25 K4F
2.5 Si	02.96 - 10.98	129	25 K4F

T568B K244 66 52 44 39 -

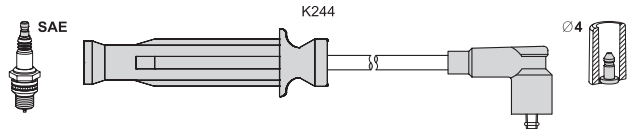

Rover 820 2.0 I/Si (RS)	01.92 - 02.99	100	20 T4H
820 Hatch. 2.0 I/Si (XS)	01.93 - 02.99	100	20 T4H

T569B K244 91 84 73 61 -

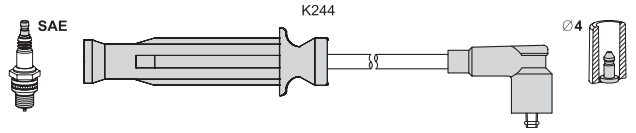

Rover 420 (RT) 2.0 Si Lux	12.95 - 03.00	100	20 T4H
420 Hatch. (RT) 2.0 Si Lux	12.95 - 03.00	100	20 T4H
420 Tourer (XW) 2.0 i	05.94 - 11.98	100	20 T4H
620 (RH) 2.0 Ti Vitesse	07.94 - 02.99	147	20 T4G

T570B K336 62 56 41 36 -

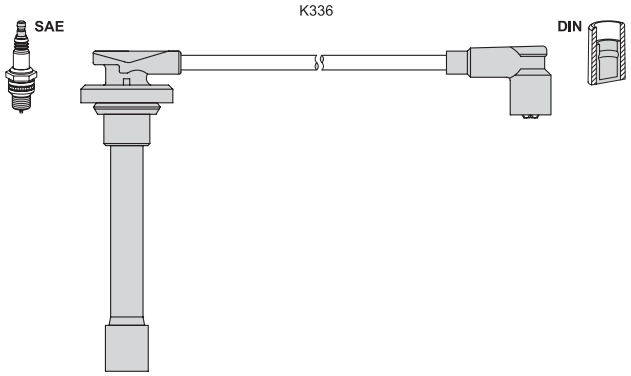

Honda Civic II Shut. 1.6 i 4WD	01.88 - 02.95	81	D16A6
Civic IV Hatch. 1.3 16 V cat	09.89 - 09.91	55	D13B2
1.4 L	10.87 - 12.89	66	D14A1
1.5 i 16V	10.88 - 09.91	66	D15B2
1.5 i 16V	10.88 - 09.91	69	D15B2
1.6 i 16V	10.87 - 09.91	81	D16Z2
Civic IV Sedan (ED) 1.4 L	10.87 - 12.89	66	D14A1
1.5 i 16V	10.87 - 09.91	66	D15B2
1.5 i 16V	10.87 - 09.91	69	D15B2
1.6 i 16V	10.87 - 09.91	81	D16Z2
Civic V Coupe (EJ) 1.5 i LSi	01.94 - 11.95	74	D15B7
Civic V Hatchback 1.3 16V	10.91 - 11.95	55	D13B2
Civic V Sedan (EG, EH) 1.3	01.92 - 12.92	55	D13B2
Civic VI Fastback 1.6 i	09.94 - 01.97	83	D16Y3
Concerto (HW) 1.4	08.89 - 10.91	66	D14A8/D14A1
1.4	10.89 - 10.92	61	D14A1
1.5 i 16V	08.89 - 03.95	66	D15B2
1.6 16V	08.89 - 03.95	78	D16Z2
1.6 i 16V	08.89 - 03.95	82	D16Z2
Concerto Sedan 1.4	08.89 - 10.91	66	D14A8/D14A1
1.4	10.89 - 10.92	61	D14A1
1.5 i 16V	08.89 - 05.95	66	D15B2
1.6 16V	08.89 - 03.95	78	D16Z2
1.6 i 16V	08.89 - 03.95	82	D16Z2
Rover 416 (RT) 1.6 Si	05.95 - 03.00	83	D 16 Y2
416 Hatchback (RT) 1.6 Si	06.95 - 03.00	83	D 16 Y2
623 (RH) 2.3 Si	08.93 - 02.99	116	H 23 A3

T571B K108 50 43 33 30 K061 80

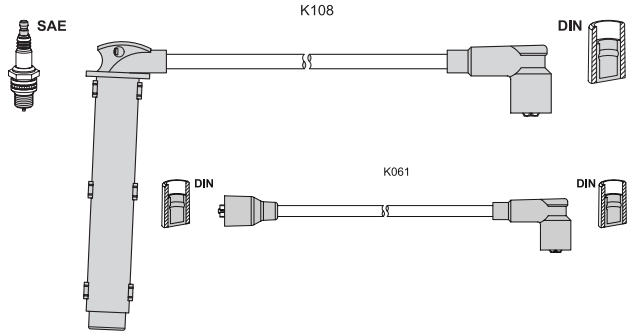

Rover 214 Hatch. 1.4 GSi/Si	12.92 - 10.95	76	14 K4F
1.4 GSi/Si	01.90 - 10.95	70	14 K4C
1.4 Si/Gsi	10.89 - 10.95	66	14 K4C/14 K4D
414 (XW) 1.4	01.93 - 04.95	70	14 K4C
414 (XW) 1.4 GSI/SI	04.90 - 04.95	66	14 K4C/14 K4D

T 572B ▶

T572B K246 58 57 40 34 -

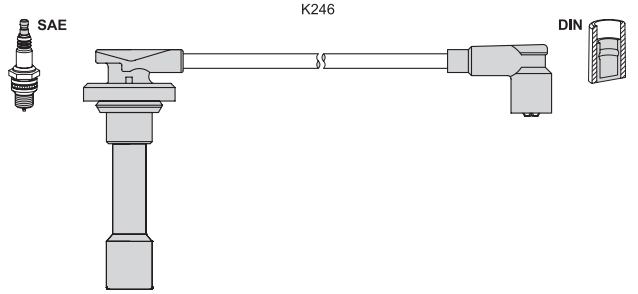

Honda Civic IV Hatch. 1.6 i 16V	09.87 - 09.91	96	D16A9
Concerto (HW) 1.6 i 16V	08.89 - 03.95	90	D16A8
Concerto Sedan 1.6 i 16V	08.89 - 03.95	90	D16A8
CRX II (ED, EE) 1.6 i 16V	10.87 - 02.92	91	D16Z5
1.6 i 16V	10.87 - 12.89	96	D16A8/D16A9
Rover 216 Coupe (XW) 1.6	10.92 - 06.99	90	D 16 A8
216 Hatch. (XW) 1.6 GSi	10.89 - 10.95	82	D 16 Z2
1.6 GTi	09.90 - 10.95	90	D 16 A8
416 (XW) 1.6 GSi	04.90 - 04.95	82	D 16 Z2
1.6 GTi	04.90 - 04.95	90	D 16 A8
400 Tourer (XW) 1.6 i	05.94 - 11.98	90	D 16 A8
Cabriolet 216 (XW) 1.6 i	01.92 - 11.99	90	D 16 A8

T573G K234 115 110 90 35 30 30 -

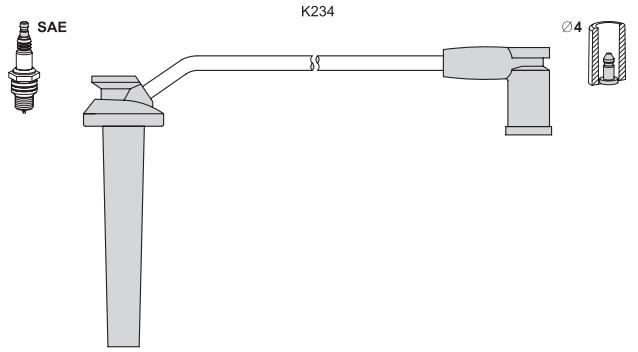

Ford Mondeo III 3.0 V6 24V	09.04 - 08.07	150	REBA
ST220 3.0	04.02 - 08.07	166	MEBA
Mondeo III Combi 3.0 24V	09.04 - 08.07	150	REBA
ST220 3.0	04.02 - 08.07	166	MEBA
Mondeo III sedan 3.0 24V	09.04 - 08.07	150	REBA
ST220 3.0	04.02 - 08.07	166	MEBA

T574B K220 100 95 75 75 55 50 K061 55

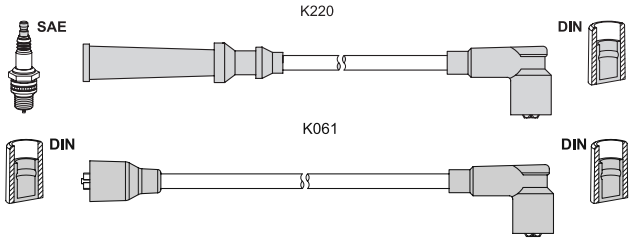

Nissan Patrol GR I 4.2 cat	11.88 - 06.97	121	TB42E

T575B K220 27 43 54 69 -

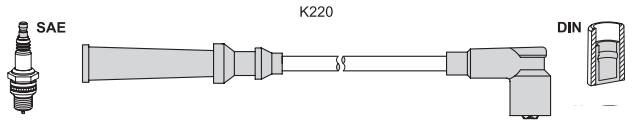

Ford Maverick 2.4 i	09.96 - 04.98	85	KA-24
2.4 i	09.96 - 04.98	87	KA-24

< T575B

Nissan Pick Up (D21) 2.4 i 12V	10.95 - 02.98	91	KA24E
2.4 i 12V 4WD	10.95 - 02.98	93	KA24E
Pick Up (D22) 2.4 i	02.98 -	88	KA24E
2.4 i 4WD	02.98 -	88	KA24E
Terrano II (R20) 2.4 4WD	05.96 - 01.02	85	KA24E
2.4 4WD	05.96 -	87	KA24E

T577B K010 75 85 90 100 K327 68

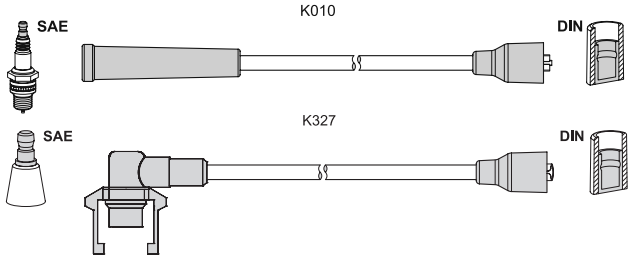

Renault Trafic Bus 2.0	07.80 - 04.85	58	829 720
2.0	06.86 - 04.89	59	J5R 722/_716/_726
2.0 4x4	06.86 - 04.89	59	J5R 722/_716/_726
Trafic Bus (TXW) 2.0	05.89 - 08.90	59	J5R 726
Trafic Flatbed (P6) 2.0	03.80 - 04.89	59	J5R 726
Trafic Flatbed 2.0 [RWD]	05.89 - 10.97	59	J5R 726
Trafic Van (T1, T3, T4) 2.0	06.86 - 04.89	59	J5R 722/_716/_726
2.0	07.80 - 04.85	58	829 720
2.0 4x4	06.86 - 04.89	59	J5R 722/_716/_726
Trafic Van (TXX) 2.0	05.89 - 08.90	59	J5R 716

T578C K403 85 70 63 60 - alternative T074B

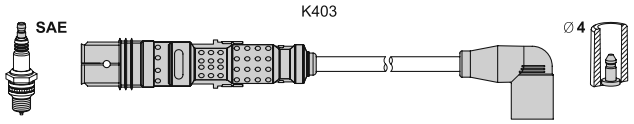

Seat Arosa (6H) 1.0	05.97 - 06.04	37	AUC
1.4	05.97 - 06.04	44	AUD
Cordoba (6K2) 1.0	06.99 - 10.02	37	ANV/ALD/AUC
1.4	06.99 - 10.02	44	ANW/AKK/AUD
Cordoba Vario (6K5) 1.4	06.99 - 12.02	44	ANW/AKK/AUD
Ibiza III (6K1) 1.0	08.99 - 02.02	37	ANV/ALD/AUC
1.4	08.99 - 02.02	44	ANW/AKK/AUD
Inca (6K9) 1.4 i	11.95 - 06.03	44	AUD
VW Caddy II Combi (9K9B) 1.4	11.95 - 01.04	44	AUD
Caddy II Van (9K9A) 1.4	11.95 - 01.04	44	AUD
Lupo (6X1, 6E1) 1.0	09.98 - 07.05	37	ALD/ANV/AUC
1.4	10.00 - 07.05	44	AUD
Polo (6N2) 1.4	10.99 - 09.01	44	AUD
Polo Classic 60 (6KV2) 1.4	12.95 - 09.01	44	AKK/AUD
Polo Variant (6KV5) 1.4	05.97 - 09.01	44	AKK/AUD

T579B K247 42 57 45 57 -

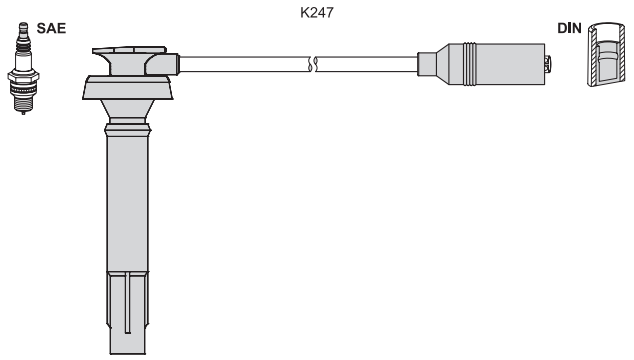

Subaru Forester (SG) 2.0	09.02 -	92	EJ20

< T579B

Subaru Forester (SG) 2.5	12.03 -	155	EJ25
Impreza Sedan 2.0	12.00 -	92	EJ20
Impreza St. Wagon 2.0	12.00 -	92	EJ20
Legacy III (BE, BH) 2.0	04.99 - 08.03	92	EJ20
2.5	10.98 - 08.03	115	EJ25
Legacy III St. Wagon 2.0	12.98 - 08.03	92	EJ20
2.5	12.98 - 08.03	115	EJ25
Outback (BE, BH) 2.5	10.00 - 08.03	115	EJ25

T580B K248 65 65 50 50 -

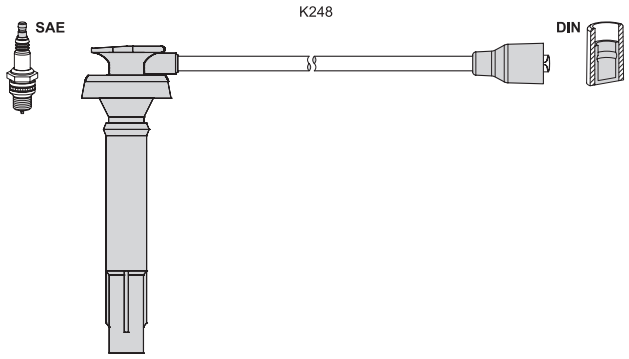

Subaru Impreza Sed. (GC) 1.6 i	12.97 - 12.00	66	EJ16
1.6 i	06.98 - 12.00	70	EJ161
1.6 i 4WD	12.97 - 12.00	66	EJ16
1.6 i 4WD	06.98 - 12.00	70	EJ161
Impreza Sed. (GD) 1.6 AWD	12.00 -	70	EJ16
Impreza St. Wag. (GF) 1.6	12.97 - 08.98	66	EJ16E
1.6 i	06.98 - 12.00	70	EJ161
1.6 i 4WD	12.97 - 12.00	66	EJ16
1.6 i 4WD	06.98 - 12.00	70	EJ161
Impreza St. Wag. (GD) 1.6	12.00 -	70	EJ16
Legacy IV 2.0	09.03 -	101	EJ20

T581B K249 60 55 45 45 -

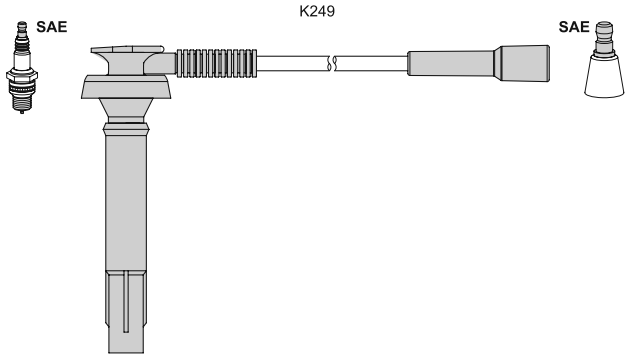

Subaru Impreza Coupe 2.0	12.97 - 09.00	85	EJ20E
2.0 4WD	12.97 - 12.00	85	EJ20
2.2	09.98 - 09.00	96	EJ22E
2.2 AWD	09.98 - 09.00	96	EJ22E
Impreza Sedan 2.0	09.98 - 09.00	92	EJ201
2.0 i 4WD	12.97 - 12.00	85	EJ20
2.0 i 4WD	06.98 - 12.00	92	EJ20
2.2 GX AWD	09.98 - 09.00	96	EJ22E
2.2 GX AWD	11.95 - 08.98	97	EJ22
Impreza St. Wag. (GF) 2.0	12.97 - 08.98	85	EJ20E
2.0	09.98 - 09.00	92	EJ201
2.0 16V AWD	06.98 - 12.00	92	EJ20
2.2 GX AWD	09.98 - 09.00	96	EJ22E
2.2 GX AWD	11.95 - 08.98	97	EJ22

T582B K251 80 45 45 K250 80 -

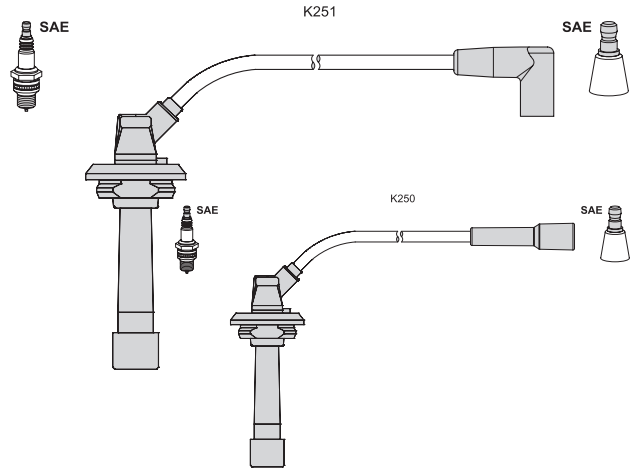

Subaru Forester 2.0 S Turbo	06.98 - 04.01	125	EJ20
Impreza Coupe 2.0 T 4WD	07.98 - 12.00	155	EJ20G
Impreza Sed. 2.0 T GT 4WD	07.98 - 12.00	155	EJ20 (Turbo)
2.0 Turbo GT 4WD	06.98 - 12.00	160	EJ205
Impreza Sed. 2.0 T WRX	12.00 - 10.02	160	EJ205
2.0 WRX Turbo	12.02 -	165	EJ205
Impreza S. W. 2.0 i T 4WD	07.98 - 12.00	155	EJ20 (Turbo)
2.0 Turbo GT 4WD	06.98 - 12.00	160	EJ205
Impreza St. Wagon 2.0 T	12.00 - 10.02	160	EJ205
2.0 WRX Turbo	12.02 -	165	EJ205

T583B K252 60 60 65 65 -

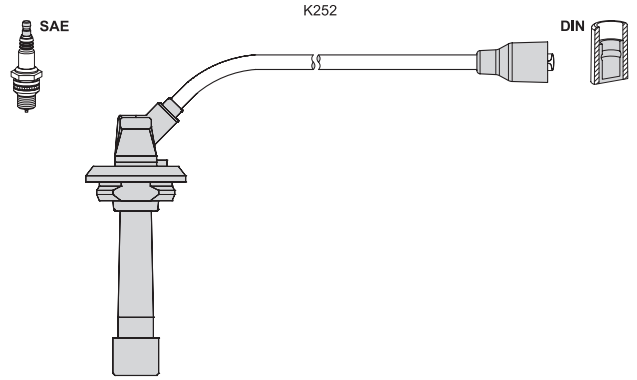

Subaru Impreza Coupe 2.0 T	12.96 - 06.98	155	EJ20G
Impreza Sed. 2.0 T GT 4WD	03.94 - 06.98	155	EJ20 (Turbo)
Impreza S. W. 2.0 i T 4WD	03.94 - 06.98	155	EJ20 (Turbo)
Legacy II 2.5 i 4WD	06.96 - 03.99	110	EJ25D
Legacy II St. Wag. 2.5 i 4WD	06.96 - 11.98	110	EJ25D

T584B K253 85 85 55 50 -

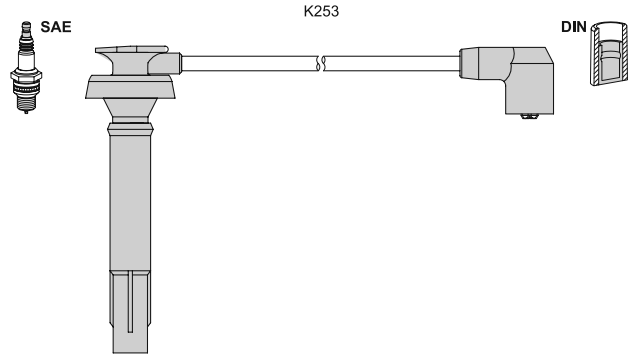

Subaru Legacy IV 2.5	09.03 -	121	EJ25
Outback (BL,BP) 2.5	11.03 - 09.09	121	EJ25D

T 585B ▶

T585B K132 50 40 31 24 -

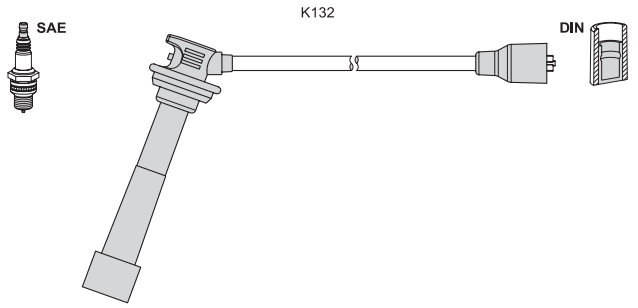

Suzuki Baleno (EG) 1.3	09.96 - 01.99	52	G13BA
1.3 i 16V	07.95 - 01.99	63	G13BB
1.6 i 16V	07.95 - 01.99	72	G16B
1.6 i 16V 4x4	07.95 - 01.99	72	G16B
Baleno CC (EG) 1.3 i 16V	07.95 - 01.99	63	G13BB
1.6 i 16V	07.95 - 01.99	72	G16B
1.6 i 16V 4x4	07.95 - 01.99	72	G16B
Baleno Combi 1.3 16V	03.97 - 01.99	63	G13BB
1.6 i 16V	08.96 - 01.99	72	G16B
1.6 i 16V 4x4	08.96 - 01.99	72	G16B
X-90 (EL) 1.6 i 16V	09.95 - 12.97	71	G16B
1.6 i 16V 4x4	09.95 - 12.97	71	G16B

T587P K255 115 95 90 + + + -

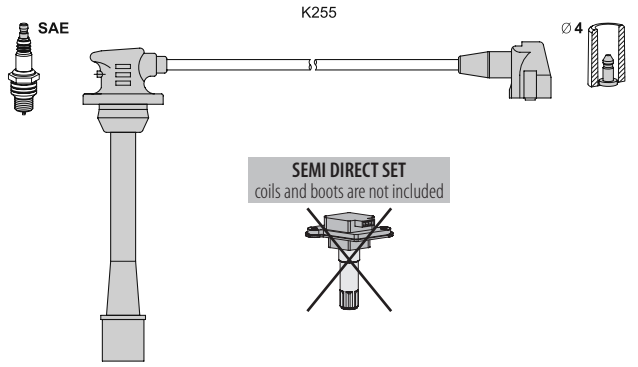

Toyota 4 Runner 3.4 i	11.95 - 03.96	136	5VZ-FE
Land Cruiser 90 3.4 i 24V	04.96 -	131	5VZ-FE

T588P K256 65 50 50 35 -

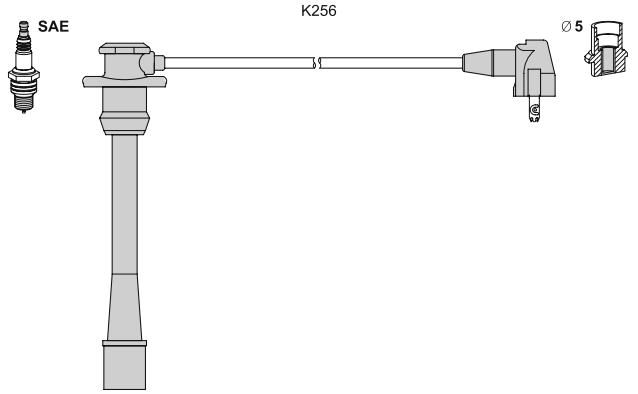

Toyota 4 Runner 2.7 i	11.95 - 03.96	112	3RZ-FE

T589C K257 55 95 90 25 50 85 80 25 K093 30/30 alternative T979B

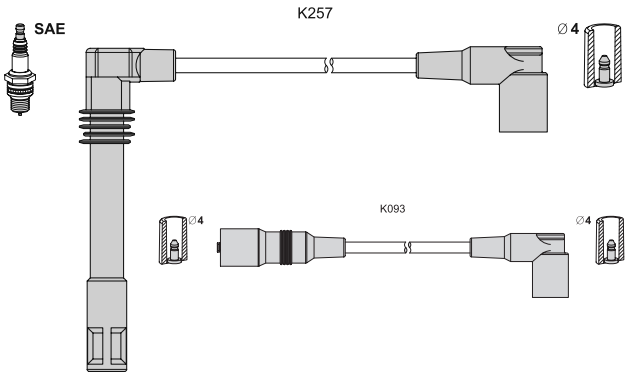

Audi 100 S4 V8 quattro	03.94 - 06.94	213	AEC
S4 V8 quattro	10.92 - 06.94	206	ABH
100 Avant S4 V8 quattro	03.94 - 06.94	213	AEC
S4 V8 quattro	10.92 - 06.94	206	ABH
A6 (4A, C4) S6 4.2 quattro	06.94 - 10.97	213	AEC
A6 Avant S6 4.2 quattro	06.94 - 12.97	213	AEC
V8 (44_, 4C_) 3.6 quattro	04.93 - 02.94	180	PT
3.6 quattro	10.88 - 02.94	184	PT
4.2 quattro	10.91 - 02.94	206	ABH

T590C K603 96 77 84 84 K258 36 alternative T944B

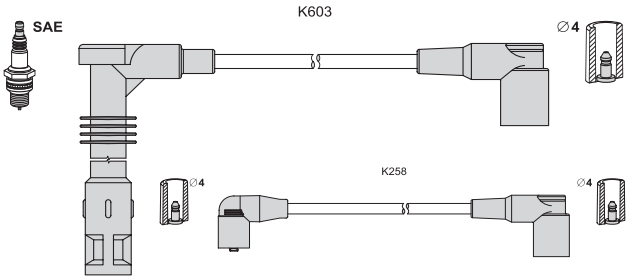

Audi 80 (8C, B4) 2.0 E 16V	08.92 - 12.94	103	ACE
2.0 E 16V quattro	04.92 - 12.94	103	ACE
80 Avant (8C, B4) 2.0 E 16V	02.93 - 01.96	103	ACE
2.0 E 16V quattro	12.92 - 07.95	103	ACE
Coupe (89, 8B) 2.0 16 V	08.92 - 12.96	103	ACE

T591C K603 85 80 85 80 K258 30 alternative T945B

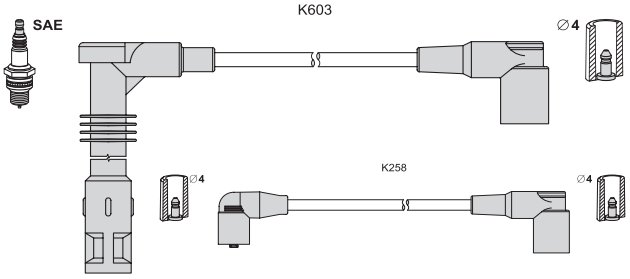

Audi 80 2.0 E 16V quattro	03.90 - 08.91	101	6A
Coupe (89, 8B) 2.0 16 V	01.92 - 07.92	101	6A

T592C K603 96 77 84 77 K258 48 — alternative T954B

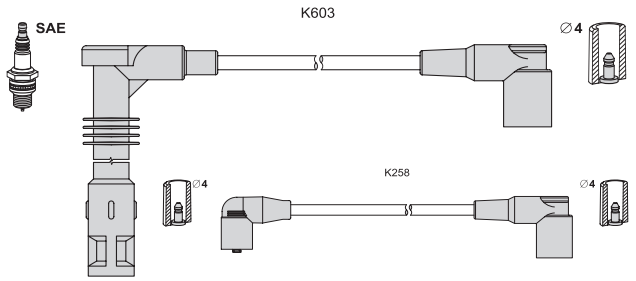

Audi 100 (4A, C4) 2.0 E 16V	01.92 - 06.94	103	ACE
2.0 E 16V quattro	07.92 - 06.94	103	ACE
100 Avant 2.0 E 16V	07.92 - 06.94	103	ACE
2.0 E 16V quattro	07.92 - 06.94	103	ACE
A6 (4A, C4) 2.0 16V	06.94 - 10.97	103	ACE
2.0 16V quattro	06.94 - 10.97	103	ACE
A6 Avant (4A, C4) 2.0 16V	06.94 - 12.97	103	ACE
2.0 16V quattro	06.94 - 12.97	103	ACE

T593C K080 60 60 60 60 K091 70 — alternative T034B

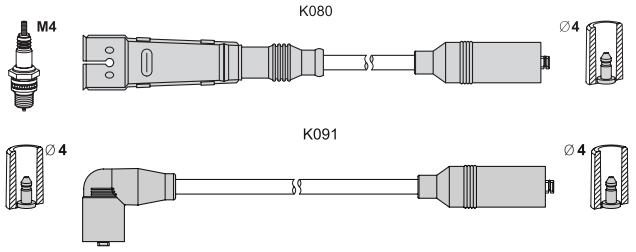

Audi 80 (8C, B4) 1.6 E	06.93 - 12.94	74	ADA
80 Avant (8C, B4) 1.6 E	06.93 - 01.96	74	ADA
100 (4A, C4) 2.0	12.90 - 06.94	74	AAE
100 Avant (4A, C4) 2.0 E	09.91 - 06.94	74	AAE

T594C K218 30 30 + + - — alternative T088B

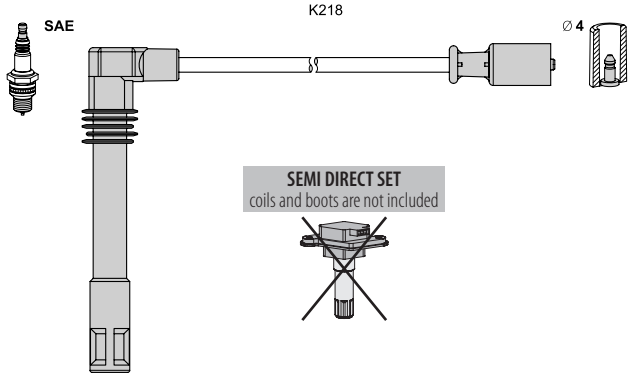

Audi A4 (8D2, B5) 1.8	01.95 - 11.00	92	ADR/APT/ARG
1.8 quattro	01.95 - 11.00	92	ADR/APT/ARG
A4 Avant (8D5, B5) 1.8	02.96 - 09.01	92	AVV/ADR/APT/ARG
1.8 quattro	01.96 - 09.01	92	ADR/APT/ARG
A6 (4A, C4) 1.8	12.95 - 10.97	92	ADR
1.8 quattro	12.95 - 10.97	92	ADR
A6 Avant (4A, C4) 1.8	12.95 - 12.97	92	ADR
1.8 quattro	12.95 - 12.97	92	ADR
Cabriolet (8G7, B4) 1.8	01.97 - 08.00	92	ADR
VW Passat (3B2) 1.8	10.96 - 11.00	92	ADR/APT/ARG
1.8 syncro/4motion	10.96 - 11.00	92	ADR/APT/ARG
Passat Variant (3B5) 1.8	06.97 - 11.00	92	ADR/APT/ARG
1.8 syncro/4motion	06.97 - 11.00	92	ADR/APT/ARG

T595C K261 47 70 79 90 100 106 -

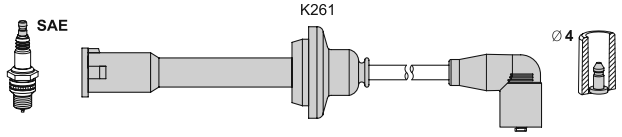

Alfa Romeo 155 (167) 2.5 V6	02.92 - 09.96	121	AR 67301
2.5 V6	10.92 - 12.97	120	AR 67302/AR 67303
Lancia Thema 3000 3.0 V6	08.92 - 07.94	126	834 F.000
Thema SW 3000 3.0 V6	09.92 - 07.94	126	834 F.000

T596B K262 68 68 68 68 -

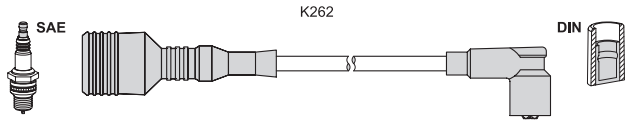

Alfa Romeo 33 (907A) 1.4 i.e.	06.91 - 09.94	65	AR 30753
1.4 i.e.	06.91 - 09.94	66	AR 30753
33 Sportwagon (905A) 1.4	01.84 - 12.88	66	AR 30587
1.4 i.e. 4x4	06.91 - 09.94	66	AR 30587/AR 30755

T597B K262 68 73 66 57 -

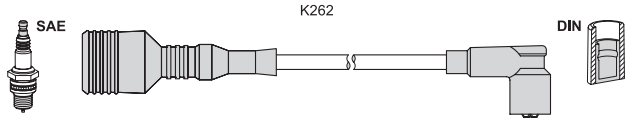

Alfa Romeo 33 (905) 1.5	05.83 - 12.93	70	AR 30182
33 Sportwagon (905A) 1.5	09.84 - 12.87	70	AR 30514
1.5 4x4	09.84 - 12.87	70	AR 30182
145 (930) 1.4 i.e.	07.94 - 12.96	66	AR 33501
146 (930) 1.4 i.e.	12.94 - 12.96	66	AR 33501

T598B K209 20 25 36 48 K070 27

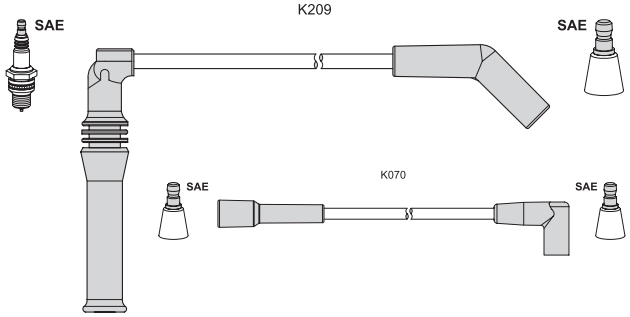

Peugeot BX 19 1.9 GTi 16V	03.88 - 02.93	108	DFW (XU9J4)
1.9 GTi 16V	09.87 - 12.88	116	D6C (XU9J4)
309 II (3C, 3A) 1.9 GTI 16V	10.90 - 12.93	108	DFW (XU9J4Z)
1.9 GTI 16V	08.89 - 07.90	116	D6C (XU9J4)
405 I (15B) 1.9 Sport MI-16	07.87 - 11.91	116	D6C (XU9J4)
1.9 Sport MI-16	04.88 - 12.92	108	DFW (XU9J4Z)
1.9 Sport MI-16 4x4	04.88 - 12.92	108	DFW (XU9J4Z)
405 I Break (15E) 1.9 4x4	07.90 - 07.92	108	
405 II (4B) 2.0 16V	06.94 - 10.95	110	RFT (XU10J4)

T 599C ▶

T599C K263 33 33 15 15 + + + + -

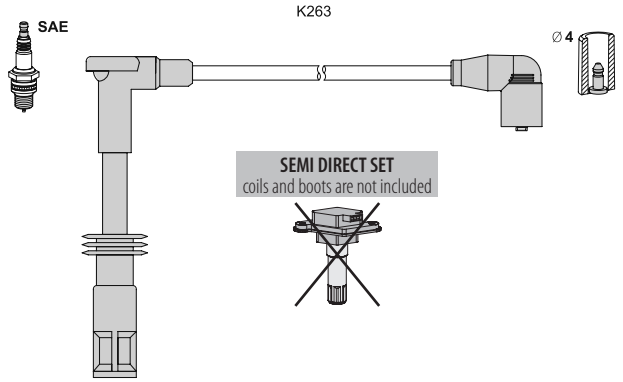

Alfa Romeo 145 1.4 i.e. T.S.	12.96 - 01.01	76	AR 33503
1.6 i.e. 16V T.S.	12.96 - 01.01	88	AR 67601
1.8 i.e. 16V	03.98 - 01.01	106	AR 32201
1.8 i.e. 16V T.S.	12.96 - 12.98	103	AR 67106
2.0 16V Quadrifoglio	03.98 - 01.01	114	AR 32301
2.0 16V T.S.	10.95 - 01.01	110	AR 67204
146 (930) 1.4 i.e. 16V T.S.	11.96 - 01.01	76	AR 33503
1.6 i.e. 16V T.S.	11.96 - 01.01	88	AR 67601
1.8 i.e. 16V T.S.	11.96 - 01.01	103	AR 67106
1.8 i.e. 16V T.S.	03.98 - 01.01	106	AR 32201
2.0 16V Quadrifoglio	03.98 - 01.01	114	AR 32301
2.0 16V T.S.	10.95 - 01.01	110	AR 67204
155 (167) 1.6 16V T.S.	05.96 - 12.97	88	AR 67601
1.7 16V T.S.	05.96 - 12.97	103	AR 67106
2.0 16V T.S.	03.95 - 12.97	110	AR 67204
156 (932) 1.6 16V T.S.	09.97 - 09.05	88	AR 32102/AR 67601
1.8 16V T.S.	09.97 - 10.00	106	AR 32201
2.0 16V T.S.	09.97 - 10.00	114	AR 32301
156 Sportwagon 1.8 16V T.S.	05.00 - 10.00	106	AR 32201
2.0 16V T.S.	05.00 - 10.00	114	AR 32301
166 (936) 2.0 T.S.	09.98 - 10.00	114	AR 34103
GTV (916C_) 1.8 16V	05.98 - 10.05	106	AR 32201
2.0 T.S. 16V	06.95 - 10.05	110	AR 16201
2.0 T.S. 16V	05.98 - 08.00	114	AR 32301
Spider (916S_) 1.8 16V	05.98 - 04.05	106	AR 32201
2.0 16V T.S.	05.98 - 08.00	114	AR 32301
2.0 16V T.S.	06.95 - 04.05	110	AR 16201

T600B K011 55 55 45 40 -

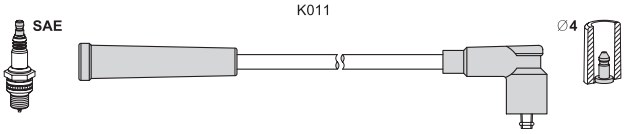

Seat Marbella (28) 0.9	07.97 - 10.98	32	08 NCB
0.9 cat	11.96 - 10.98	30	08 NCB
Terra (24) 0.9	02.87 - 12.96	29	09 NCA
0.9 cat	02.92 - 12.94	29	09 NCB
Terra Van (024A) 0.9	01.87 - 12.95	29	09 NCA
0.9 cat	01.90 - 12.95	29	09 NCB

T601C K082 85 80 65 60 K090 40 alternative T016B

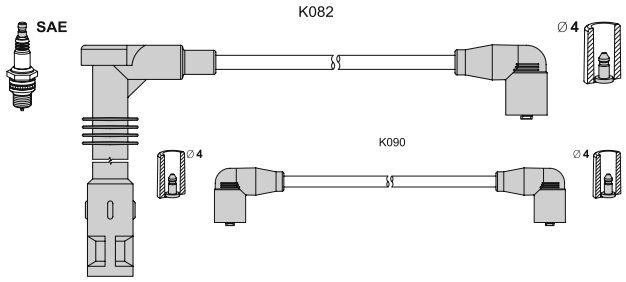

Seat Cordoba 1.8 i 16V	10.93 - 08.96	95	ADL
2.0 i 16V	08.96 - 06.99	110	ABF
Ibiza II (6K1) 1.8 i 16V	11.93 - 08.96	95	ADL
2.0 i 16V	08.96 - 08.99	110	ABF
Toledo I (1L) 2.0 i 16V	11.93 - 03.99	110	ABF
VW Golf III (1H1) 2.0 GTI 16V	08.92 - 08.97	110	ABF

T602B K028 60 60 65 65 K061 50

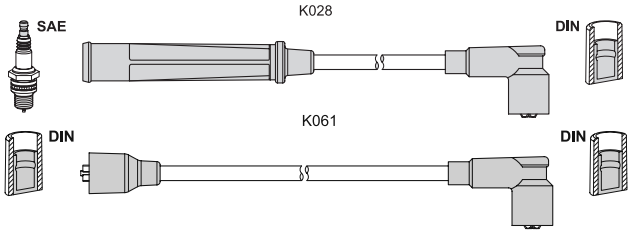

Suzuki Samurai (SJ) 1.3 Allrad	11.88 - 12.04	51	G13BA
Vitara (ET, TA) 1.6 (TA)	07.88 - 03.98	59	G16A (8V)
1.6 (ET)	07.88 - 12.91	60	G16A (8V)
Vitara Cabrio 1.6	07.88 - 01.95	59	G16A (8V)

T606B K028 40 40 40 40 K317 60

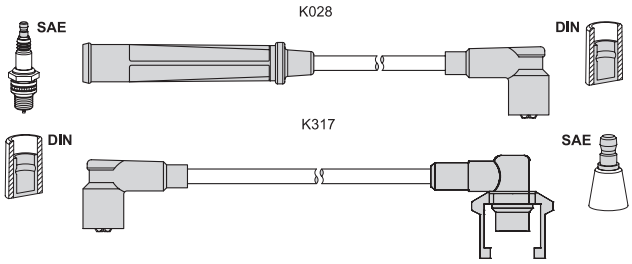

Renault Clio I (B/C57_) 1.2	01.96 - 12.96	40	C3G 720
Volvo 340-360 1.4	08.82 - 08.85	46	B 14.3 E
1.4	08.86 - 12.88	50	B 14.4 S
1.4	08.75 - 07.83	51	B 14.4 S
1.4	08.87 - 07.88	51	B 14.4 S
1.4	08.83 - 07.86	52	B 14.4 S
340-360 Sedan 1.4	08.86 - 12.88	50	B 14.4 S
1.4	08.87 - 07.88	51	B 14.4 S
1.4	08.83 - 07.86	53	B 14.4 S

T607B K121 35 40 50 60 K065 55

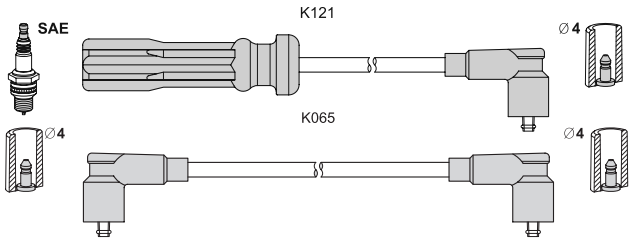

Volvo 740 (744) 2.0	09.90 - 08.92	82	B 200 F
2.0	01.87 - 08.88	86	B 200 E

< T607B

Volvo 740 (744) 2.0	01.86 - 08.90	118	B 200 ET
2.0	01.85 - 12.85	120	B 200 ET
2.3	08.87 - 07.92	85	B 230 F
2.3	08.84 - 07.88	96	B 230 E
2.3	08.88 - 07.90	100	B 230 FB
2.3 Turbo	08.85 - 12.88	134	B 230 ET
740 Combi (745) 2.0	08.89 - 07.91	82	B 200 F
2.0	01.87 - 08.88	86	B 200 E
2.0 Turbo	09.87 - 08.90	115	B 200 ET
2.0 Turbo	05.85 - 08.87	121	B 200 ET
2.3	08.85 - 12.89	83	B 230 F
2.3	08.85 - 07.88	96	B 230 E
2.3	08.87 - 07.92	85	B 230 F
2.3	08.89 - 07.90	100	B 230 FB
2.3 Turbo	08.85 - 07.88	134	B 230 ET
760 (704, 764) 2.3 Turbo	08.84 - 10.88	134	B 230 ET
760 Combi 2.3 Turbo	08.84 - 08.90	134	B 230 ET
940 (944) 2.3 Turbo	08.90 - 07.94	121	B 230 FT
940 Combi (945) 2.3 Turbo	08.90 - 07.94	121	B 230 FT
2.3 Turbo	08.91 - 07.93	140	B 230 FT+
960 (964) 2.3 Turbo	09.90 - 08.93	121	B 230 FT
960 Combi 2.3 Turbo	09.90 - 08.93	121	B 230 FT

T608B K111 35 40 50 60 K300 75

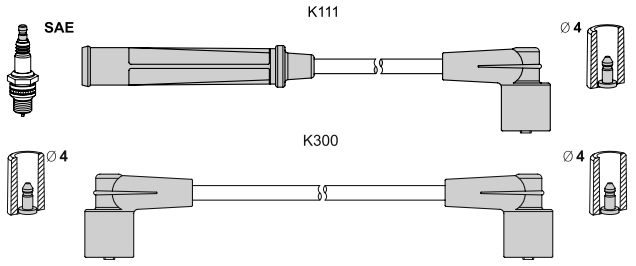

Volvo 740 (744) 2.0 GLE	12.83 - 07.84	110	B 19 ET
2.0	09.87 - 08.90	103	B 204 E
2.3	08.88 - 08.92	111	B 234 F
2.3	08.88 - 07.91	114	B 234 F
2.3	08.87 - 07.89	117	B 234 F
740 Combi (745) 2.0 16V	09.87 - 08.90	100	B 204 E
2.0 GLE	09.87 - 08.90	103	B 204 E
2.3	07.89 - 08.92	111	B 234 F
2.3	08.88 - 07.90	114	B 234 F
2.3	08.87 - 07.89	117	B 234 F
940 (944) 2.0 GL	09.90 - 04.92	103	B 204 E
2.3	08.90 - 07.91	114	B 234 F /B 234 G
940 Combi (945) 2.0 GL	09.90 - 04.92	103	B 204 E
2.3	08.90 - 07.91	114	B 234 F
960 (964) 2.0	09.90 - 08.93	103	B 204 E
960 Combi (965) 2.0	09.90 - 08.93	103	B 204 E

T609B K333 32 44 51 62 K316 50

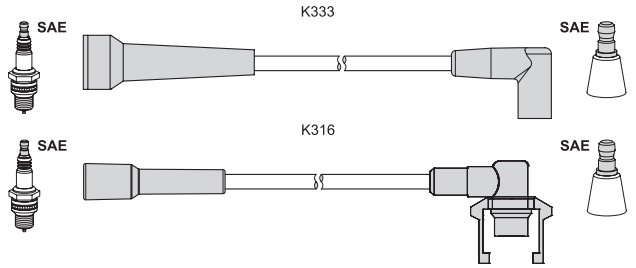

Renault 19 II Chamade 1.7	05.92 - 11.95	55	F3N 741/F3N 740
Volvo 440 K (445) 1.6	09.88 - 12.96	61	B 16 F
1.7	08.89 - 12.96	75	B 18 FP
460 L (464) 1.7	09.90 - 07.96	66	B 18 KP

T611B K012 40 40 30 30 -

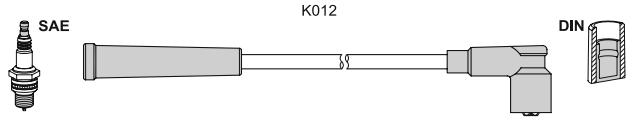

Toyota Carina II (_T15_) 1.6	10.83 - 11.87	55	4A-LC
1.6	10.83 - 11.87	62	4A-L
1.6	10.86 - 11.87	63	4A-L
Carina II Sedan (_T15_) 1.6	10.83 - 11.87	55	4A-LC
1.6	10.83 - 11.87	62	4A-L
Celica (AT16_, ST16_) 1.6	04.86 - 08.89	63	4A-L
Celica Coupe 1.6 ST	08.77 - 07.81	63	2TB/4A-L
Celica Liftback (ST16) 1.6	04.86 - 08.89	63	4A-L

T612B K012 30 40 40 40 K061 70

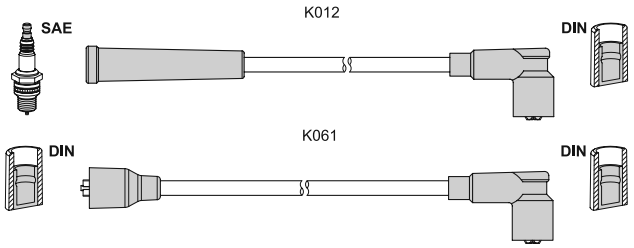

Toyota Corolla (_E8_) 1.3	06.83 - 10.84	51	2A-L
Corolla Liftback (_E8_) 1.3	06.83 - 09.84	51	2A-L

T613P K376 18 29 38 44 -

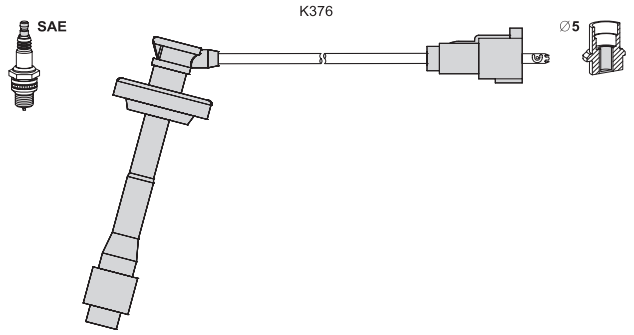

Toyota Avensis 1.8 VVT-i	10.00 - 02.03	95	1ZZ-FE
Avensis Liftback 1.8 VVT-i	10.00 - 02.03	95	1ZZ-FE
Avensis St. Wag. 1.8 VVT-i	10.00 - 02.03	95	1ZZ-FE
Celica 1.8 16V VT-i	08.99 - 07.05	105	1ZZ-FE
1.8 16V TS	08.99 - 09.05	141	2ZZ-GE

T614P K464 25 25 K463 25 20 K436 25

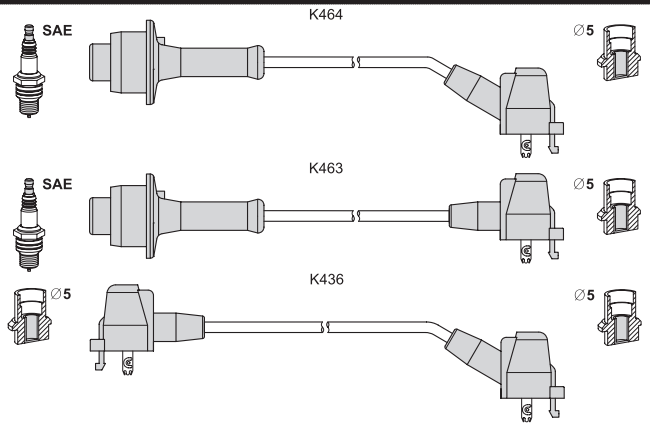

Toyota Liteace Bus 1.5	01.92 - 01.95	52	5K

T 615B ▶

T615B K012 40 40 40 50 K061 50

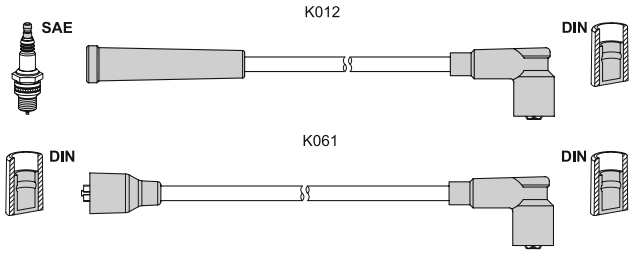

Toyota Tercel (_L1_, _L2_) 1.3	03.79 - 01.88	48	2A
Tercel (AL2_) 1.5 4WD	10.82 - 01.88	52	3A
1.5 4WD	05.86 - 01.88	50	3A-C
Tercel Sedan 1.5	05.82 - 10.85	52	3A-U
1.5 4WD	08.82 - 10.85	52	3A-U
Tercel Station Wagon 1.5	08.82 - 10.87	61	3A-U
1.5	09.86 - 10.87	60	

T616P K388 50 41 32 K389 66 -

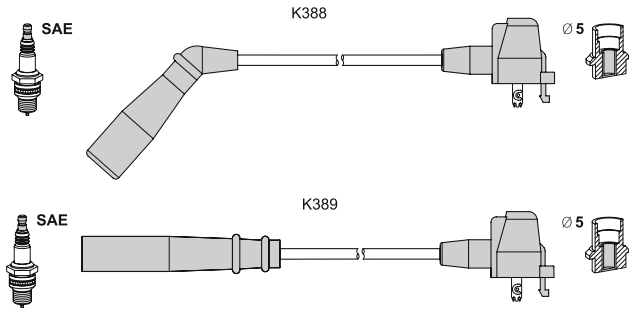

Toyota Corolla (E10) 1.3 12V	07.92 - 04.97	53	2E
Corolla Compact 1.3 12V	07.92 - 05.95	53	2E
Corolla Liftback 1.3 12V	07.92 - 05.95	53	2E
Corolla Wagon 1.3 12V	07.92 - 05.95	53	2E
Starlet (_P8_) 1.0	12.89 - 12.92	40	1E
1.3 12V cat	12.89 - 03.96	55	2E-E

T617B K414 61 K415 55 70 75 -

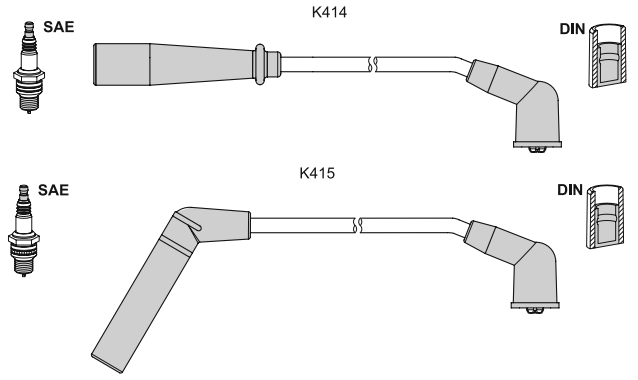

Toyota Hiace III Van 2.0	02.90 - 08.95	74	1RZ
Hiace III Wagon (LH1_) 2.0	08.89 - 08.95	74	1RZ
2.4	08.89 - 08.95	88	2RZ-E
2.4 4WD	08.89 - 08.95	88	2RZ-E

T618P K388 80 70 60 K389 65 -

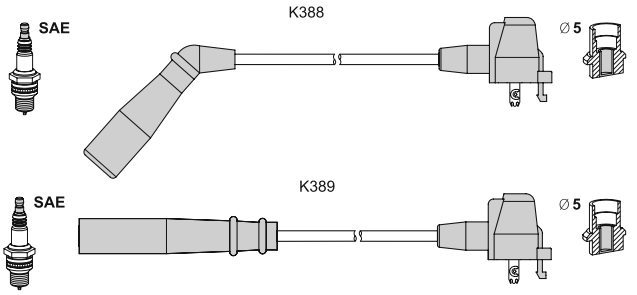

Toyota Hiace III Van 2.0	02.90 - 08.95	74	1RZ
2.4	08.89 - 08.95	88	2RZ-E
2.4 4WD	08.89 - 08.95	88	2RZ-E
Hiace III Wagon 2.0	08.89 - 08.95	74	1RZ
2.4	08.89 - 08.95	88	2RZ-E
2.4 4WD	08.89 - 08.95	88	2RZ-E
Hiace IV Bus 2.4	08.95 - 04.98	85	2RZ-E
2.4 4WD	08.95 - 04.98	85	2RZ-E
Hiace IV Van 2.4	08.95 - 02.05	85	2RZ-E
2.4 4WD	08.95 - 04.98	85	2RZ-E

T619B K019 70 85 85 100 K073 55

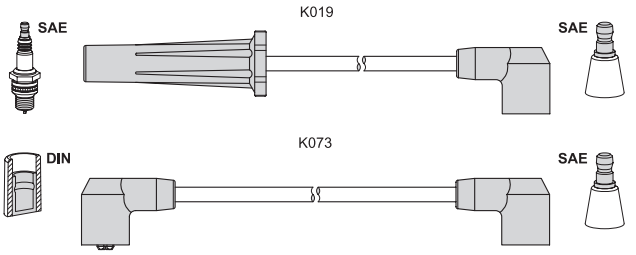

application → T740C (original)

T620B K019 40 50 65 65 80 95 K073 100

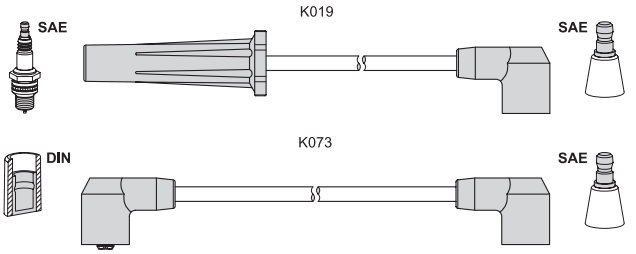

application → T741C (original)

T622C K403 110 89 108 70 95 52 - alternative T022B

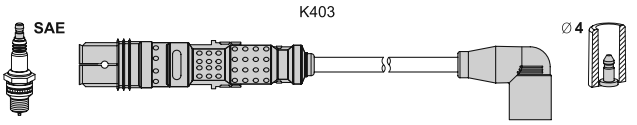

Mercedes V 280 (638/2) 2.8	08.97 - 07.03	128	M 104.900

T623C K417 25 45 50 + + + -

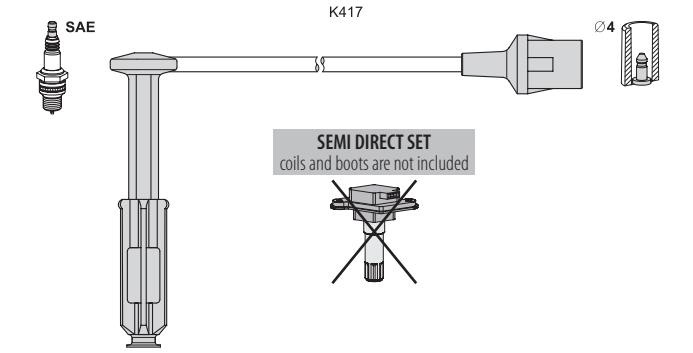

Daewoo Korando (KJ) 3.2 4x4	01.99 -	156	M 104.995
Musso (FJ) 3.2 4x4	01.99 -	162	M 104.992
Rexton (GAB)_ 3.2 V6	04.02 -	162	M 162.992
Mercedes 280 E (W124) 2.8	10.92 - 06.93	145	M 104.942
280 TE (S124) 2.8	10.92 - 06.93	145	M 104.942
320 E, CE, TE (124) 3.2	10.92 - 06.93	162	M 104.992
C 280 (W202) 2.8	05.93 - 08.95	142	M 104.941
C 36 AMG (W202) 3.6	05.94 - 05.00	206	M 104.941
E 280 (W124) 2.8	06.93 - 06.95	142	M 104.942
E 280 (W124) 2.8	06.93 - 06.95	145	M 104.942
E 280 T (S124) 2.8	06.93 - 08.95	142	M 104.942
E 280 T (S124) 2.8	06.93 - 08.95	145	M 104.942
E 320 (W124) 3.2	06.93 - 06.95	162	M 104.992
E 320 (W210) 3.2	06.95 - 08.95	162	M 104.995
E 320 (A124) 3.2	06.93 - 03.98	162	M 104.992
E 320 (C124) 3.2	06.93 - 08.95	162	M 104.992
E 320 T (S124) 3.2	06.93 - 08.95	162	M 104.992
E 36 AMG (A124) 3.6	05.94 - 03.98	200	M 104.992
E 36 AMG (C124) 3.6	05.94 - 06.97	200	M 104.992
E 36 AMG (C124) 3.6	06.93 - 04.95	195	M 104.992
E 36 T AMG (S124) 3.6	05.94 - 06.96	200	M 104.992
S 300 SE (W140) 2.8	02.93 - 08.95	145	M 104.944
S 300 SE, SEL (W140) 3.2	03.91 - 10.98	170	M 104.994
S 280 (W140) 2.8	02.93 - 08.95	142	M 104.944
SL 280 (R129) 2.8	02.93 - 08.95	142	M 104.943
SL 320 (R129) 3.2	02.93 - 08.95	170	M 104.991
Ssang Yong Korando (KJ) 3.2	12.96 -	154	M 104.995
3.2	01.99 -	156	M 104.995
3.2	06.97 -	162	M 104.992
Korando Cabrio (KJ) 3.2	01.99 -	156	M 104.995
3.2	06.97 -	162	M 104.992
Musso (FJ) 3.2	06.96 -	162	M 104.992
Rexton (GAB_) 3.2	04.02 -	162	G32D
Tagaz Road Partner 3.2 4x4	01.08 - 01.14	162	M162 (E32)
Tager 3.2 4x4	10.08 - 01.14	162	M162 (E32)

T624C K417 35 55 55 + + + -

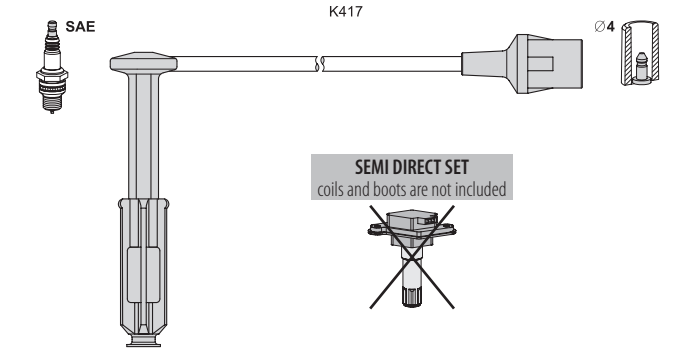

Mercedes 280 E (W124) 2.8	10.92 - 06.93	145	M 104.942
280 TE (S124) 2.8	10.92 - 06.93	145	M 104.942
320 E (W124) 3.2	10.92 - 06.93	162	M 104.992

< T624C

Mercedes 320 CE (C124) 3.2	10.92 - 05.93	162	M 104.992
320 TE (S124) 3.2	10.92 - 06.93	162	M 104.992
C 280 (W202) 2.8	09.95 - 05.00	142	M 104.941
E 280 (W124) 2.8	06.93 - 06.95	145	M 104.942
E 280 (W210) 2.8	01.96 - 06.97	142	M 104.945
E 280 T (S124) 2.8	09.95 - 06.96	142	M 104.942
E 280 T (S124) 2.8	09.95 - 06.96	145	M 104.942
E 320 (W210) 3.2	09.95 - 06.97	162	M 104.995
E 320 (C124) 3.2	09.95 - 06.97	162	M 104.992
E 320 T (S124) 3.2	09.95 - 06.96	162	M 104.992
G 320 (W463) 3.2	09.94 - 12.97	155	M 104.996
G 320 GE Cabrio 3.2	09.94 - 11.97	155	M 104.996
S 280 (W140) 2.8	09.95 - 10.98	142	M 104.944
S 300 SE (W140) 2.8	09.95 - 10.98	145	M 104.944
SL 280 (R129) 2.8	09.95 - 10.98	142	M 104.943
SL 320 (R129) 3.2	09.95 - 10.98	170	M 104.991

T625S K010 30 30 35 35 K060 50

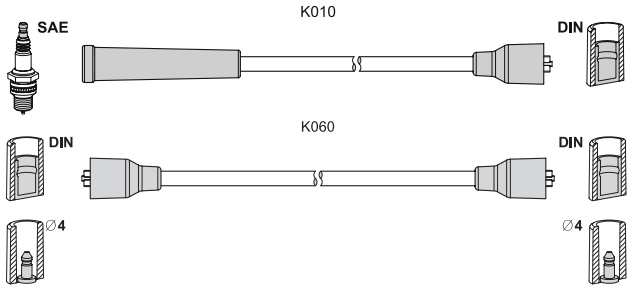

Dacia 1300 1.3	12.72 - 05.83	40	810-02/-99
1300 Combi 1.3	12.72 - 05.83	40	810-02/-99
1310 Combi 1.3	05.83 - 07.04	40	810-02/-99
1310 Sedan 1.3	05.83 - 07.04	40	810-02/-99

T626C K418 50 45 45 50 -

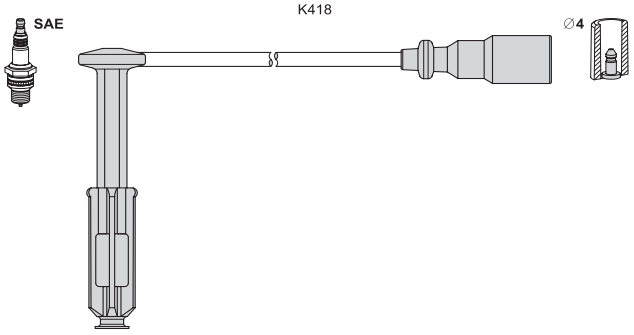

Mercedes C 180 (W202) 1.8	03.93 - 08.95	90	M 111.920
C 200 (W202) 2.0	01.94 - 08.95	100	M 111.941
C 200 T (S202) 2.0	06.96 - 03.01	100	M 111.941

T627S K012 40 45 -

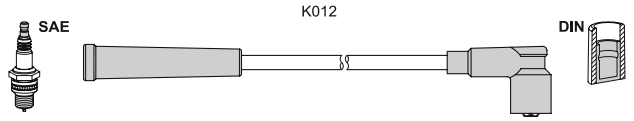

Lada 1111 Oka 0.65	89 - 97	22	VAZ 1111
11113 Oka 0.75	97 -	25	VAZ 11113

T 629B ▶

T629B K038 20 30 35 45 -

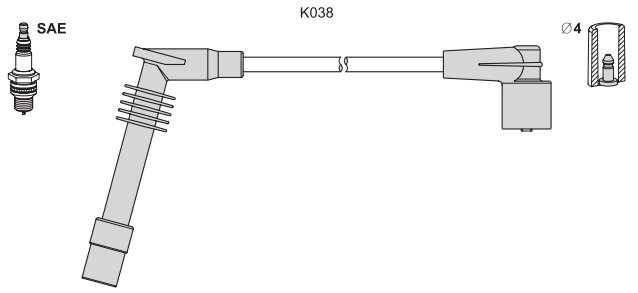

Opel/Vauxhall Astra F 1.4	11.94 - 09.98	60	14 SE
1.4 Si	11.94 - 09.98	60	C 14 SE
1.6 i	05.93 - 07.96	52	X 16 SZ
Astra F Cabriolet 1.4 Si	11.94 - 03.01	60	C 14 SE
1.6 i	03.93 - 08.96	52	X 16 SZ
1.6 i	01.96 - 03.01	55	X 16 SZR
Astra F Caravan 1.4	11.94 - 09.98	60	14 SE
1.4 Si	11.94 - 01.98	60	C 14 SE
1.6	09.95 - 01.98	55	16 NZR
1.6 i	05.93 - 07.96	52	X 16 SZ
1.6 i	09.91 - 01.98	55	X 16 SZR
Astra F CC 1.4	11.94 - 01.98	60	14 SE
1.4 Si	11.94 - 01.98	60	C 14 SE
1.6 i	05.93 - 07.96	52	X 16 SZ
1.6 i	09.91 - 01.98	55	X 16 SZR
Astra F Clas. Caravan 1.6 i	01.98 - 01.05	55	X 16 SZR
Astra F Classic CC 1.6 i	01.98 - 08.02	55	X 16 SZR
Astra F Classic Sedan 1.6 i	01.98 - 08.02	55	X 16 SZR
Astra F Van (55_) 1.6 i	02.93 - 07.96	52	X 16 SZ
Combo (71_) 1.2	07.94 - 10.01	60	C 14 SE
Corsa B 1.2 i	03.93 - 09.00	33	X 12 SZ
1.4 i	03.93 - 09.00	44	X 14 SZ
1.4 Si	03.93 - 09.00	60	C 14 SE
Corsa B Van (73_) 1.4 i	08.99 - 09.00	44	X 14 SZ
Vectra A (86_, 87_) 1.6 i	09.93 - 11.95	52	X 16 SZ
Vectra B (36_) 1.6 i	10.95 - 04.02	55	X 16 SZR
Vectra B Caravan 1.6 i	11.96 - 06.00	55	X 16 SZR
Vectra B CC (38_) 1.6 i	10.95 - 07.03	55	X 16 SZR

T631B K428 20 20 K429 22 22 -

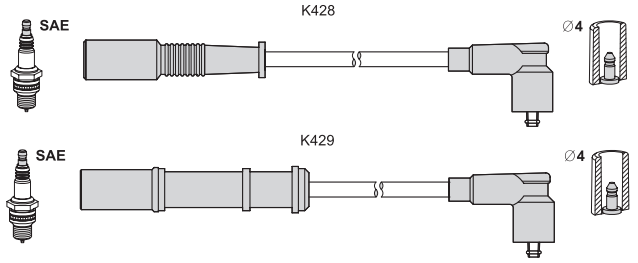

Alfa Romeo Mito (955) 1.4	05.11 -	51	955 A9.000
1.4	03.11 -	57	350 A1.000
Fiat Albea 1.4	12.07 - 12.11	57	178F3.011
500 1.2	10.07 -	51	169 A4.000
1.2 LPG	12.10 -	51	169 A4.000
500 C 1.2	09.09 -	51	169 A4.000
Doblo (119) 1.4	10.05 -	57	350 A1.000
Doblo Cargo (223) 1.4	10.05 -	57	350 A1.000
Fiorino Van/Combi 1.4	10.09 -	57	350 A1.000
Grande Punto (199) 1.2	10.05 -	48	199 A4.000
1.2	09.10 -	51	169 A4.000
1.4	06.06 -	55	199 A7.000
1.4	10.05 -	57	350 A1.000
Idea 1.4	10.05 -	57	350 A1.000
1.4 LPG	03.09 -	57	350 A1.000

< T631B

Fiat Linea 1.4	06.07 -	57	350 A1.000
Panda (169) 1.2	03.10 -	51	169 A4.000
1.2 4x4	11.09 -	51	169 A4.000
1.2 LPG	11.10 -	51	169 A4.000
1.4 Natural Power	09.10 -	57	350 A1.000
Panda (312) 1.2	02.12 -	51	169 A4.000
1.2 LPG	06.12 -	51	169 A4.000
Panda Van 1.4 Nat. Power	10.09 -	57	350 A1.000
Panda Van (312) 1.2	02.12 -	51	169 A4.000
1.2 LPG	06.12 -	51	169 A4.000
Punto (199) 1.2	03.12 -	51	169 A4.000
1.4	03.12 -	55	199 A7.000
1.4	03.12 -	57	350 A1.000
1.4 BiFuel	03.12 -	57	350 A1.000
1.4 Natural Power	03.12 -	57	350 A1.000
Punto EVO 1.2	10.09 - 02.12	48	199 A4.000
1.2	10.09 - 02.12	51	169 A4.000
1.4	07.09 - 02.12	55	199 A7.000
1.4	10.09 - 02.12	57	350 A1.000
1.4 LPG	06.09 - 02.12	57	350 A1.000
1.4 Natural Power	10.09 - 02.12	57	350 A1.000
Qubo (225) 1.4 Natural Power	10.09 -	57	350 A1.000
Ford Ka 1.2	10.08 -	51	FP4
Lancia Musa 1.4	09.05 -	57	350 A1.000
1.4 LPG	11.10 -	57	350 A1.000
Ypsilon (843) 1.2	08.10 - 12.11	51	169 A4.000
1.4	02.06 - 12.11	57	350 A1.000
1.4 LPG	11.10 - 12.11	57	350 A1.000
Ypsilon (846) 1.2	05.11 -	51	169 A4.000
1.2 Bifuel	05.11 -	49	169 A4.000

T632P K472 55 45 35 30 K473 60 45 -

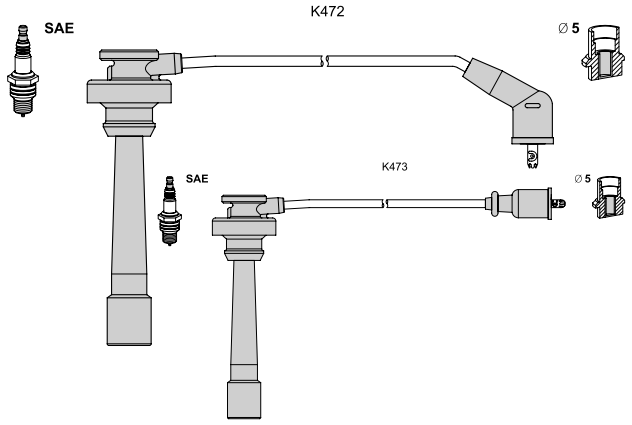

Mitsubishi Pajero II 3.0 24V	06.94 - 05.97	133	6G72 (SOHC 24V)
3.0 V6 24V	06.97 - 10.99	130	6G72 (SOHC 24V)
3.5 V6 24V	06.97 - 10.99	153	6G74 (DOHC/SOHC)
Pajero II Can. Top 3.0 24V	06.94 - 04.00	133	6G72 (SOHC 24V)
Pajero Sport (K90) 3.0 V6	11.98 -	130	6G72 (SOHC 24V)
3.0 V6	06.00 -	125	6G72 (SOHC 24V)

T633C K081 65 55 50 35 K091 50 alternative T041B

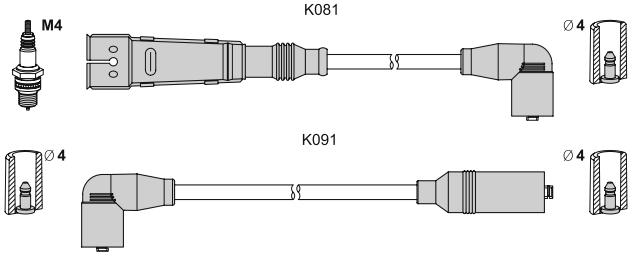

< T633C			
Skoda Octavia (1U2) 1.6	09.96 - 09.04	55	AEE
Octavia Combi (1U5) 1.6	07.98 - 09.04	55	AEE

T634H K010 35 50 60 70 K075 25
T635S K010 35 50 60 70 K075 25

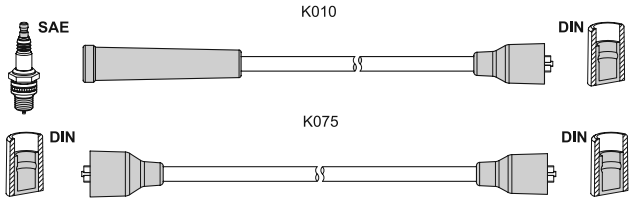

AZLK 2137 Moskvitch 1.5	12.75 - 06.88	55	UZAM 412
2140 Moskvitch 1.5	12.75 - 06.88	55	UZAM 412
412 Moskvitch 1.5	67 - 77	55	UZAM 412
Izh 1500 Combi 1.5	06.73 - 01.82	55	UZAM 412
2125 1.5	06.73 - 01.97	55	UZAM 412
21251 1.5	01.82 - 01.97	53	UZAM 331.10
2126 1.5	11.90 - 12.99	53	UZAM 331.10
2715 1.5	11.72 - 01.82	55	UZAM 412
27151 1.5	01.74 - 01.82	55	UZAM 412
27151-01 1.5	01.82 - 01.97	53	UZAM 331.10
27156	88 - 01	53	UZAM 331.10
412 Moskvitch 1.5	67 - 01.82	55	UZAM 412
412-028 Moskvitch 1.5	01.82 - 01.98	53	UZAM 331.10

T636B K367 16 14 21 30 42 48 -

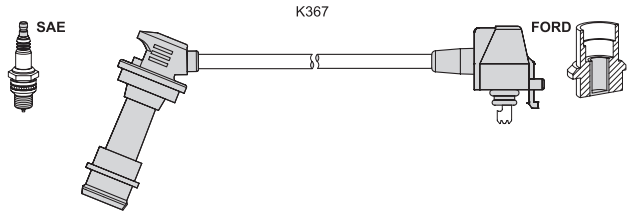

Toyota Supra 3.0 Turbo	09.87 - 04.93	173	7M-GTE
3.0 Turbo	08.88 - 05.93	175	7M-GTE

T637B K414 35 50 55 70 K416 50

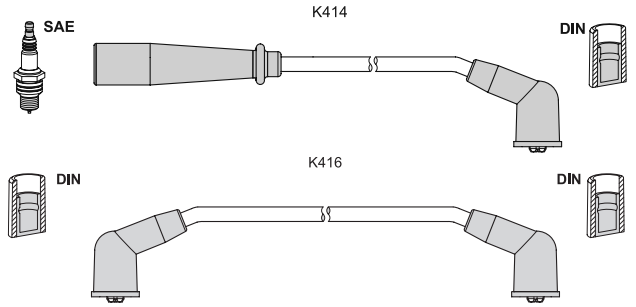

Toyota 4 Runner 2.4	08.87 - 03.96	82	22REC

T638B K419 34 49 51 61 K420 30

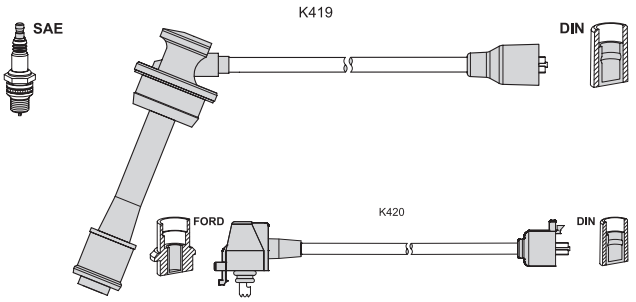

Toyota Celica Coupe 2.0 GTi	09.91 - 11.93	115	3S-GE
MR 2 (SW2_) 2.0 16V	12.89 - 05.00	115	3S-GE
2.0 16V	12.89 - 05.00	125	3S-GE
2.0 16V	12.89 - 05.00	129	3S-GE

T639P K433 34 44 62 57 75 87 K158 82

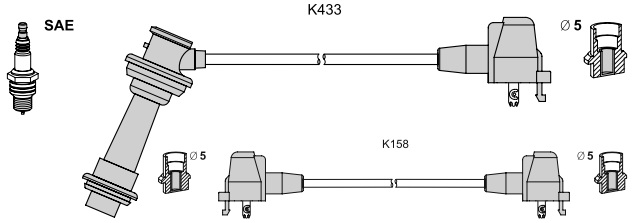

Lexus GS 300 (JZS147) 3.0	03.93 - 08.97	156	2JZ-GE
Toyota Supra 3.0i Bi-Turbo	05.93 - 08.02	243	2JZ-GTE

T640P K389 37 41 K435 42 89 99 111 K436 35

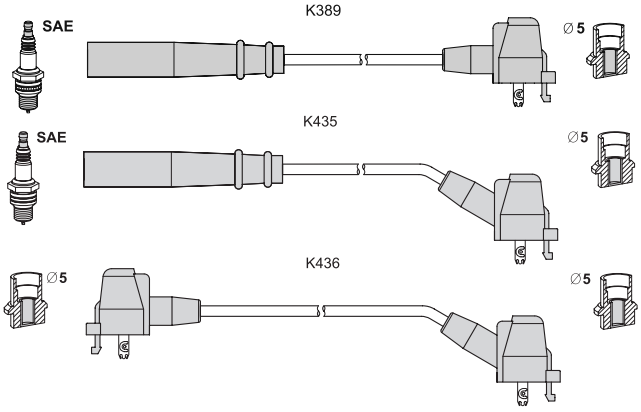

Toyota 4 Runner 3.0 V6	08.91 - 11.95	105	3VZ-E

T641S K010 20 25 30 30 K060 30

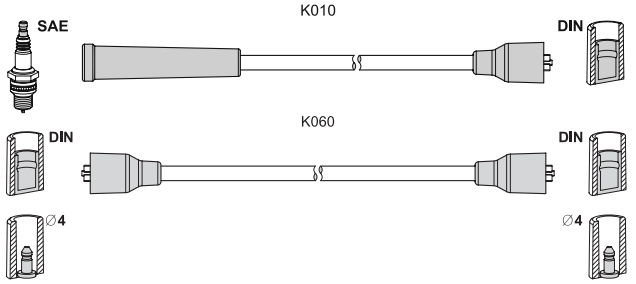

Skoda 1203 1.2	74 - 85	35	776
1203M 1.5	85 - 93	42	776/14
1203K 1.5	93 - 99	42	776/14K

T 642C ▶

T642C K081 40 55 55 70 K090 35 — alternative T042B

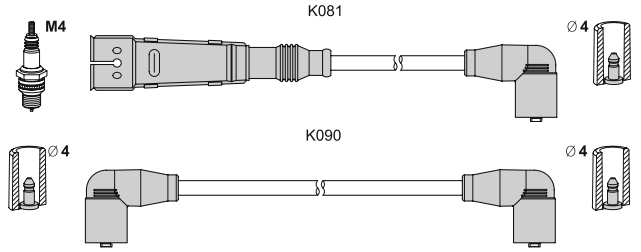

Skoda Felicia I (6U1) 1.6	08.95 - 03.98	55	EA111/AEE
Felicia I Combi (6U5) 1.6	08.95 - 03.98	55	AEE
Felicia I Fun (797) 1.6	06.97 - 04.02	55	AEE
Felicia II (6U1) 1.6	01.98 - 06.01	55	AEE
Felicia II Combi (6U5) 1.6	01.98 - 06.01	55	AEE
VW Polo Classic (6KV2) 1.0	08.96 - 12.01	37	AER
Polo Sedan (9A4) 1.0	08.96 - 12.01	37	AER

T644B K132 30 35 45 55 K076 20

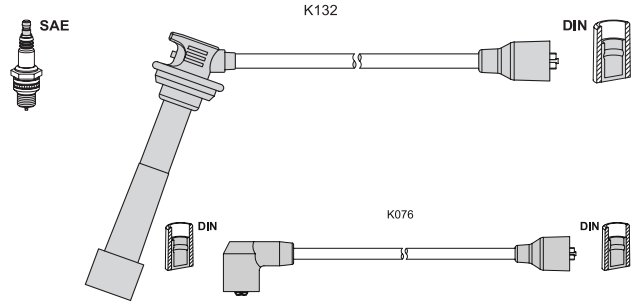

Suzuki Vitara 1.6 (TA)	07.88 - 03.98	59	G16A (8V)
1.6 (ET)	07.88 - 12.91	60	G16A (8V)
1.6 i 16V	07.90 - 03.98	71	G16B
Vitara Cabrio (ET, TA) 1.6	07.88 - 01.95	59	G16A (8V)
1.6 i 16V	07.90 - 03.99	71	G16B

T645B K235 33 40 58 63 K061 40

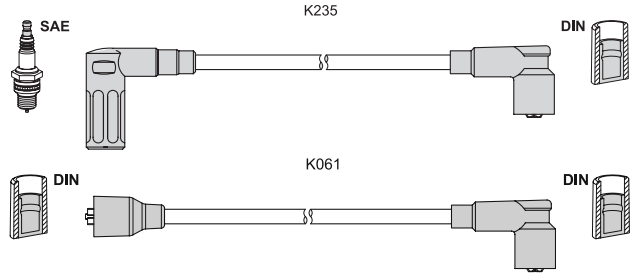

Fiat Tempra (159) 1.4 i.e.	03.92 - 08.96	51	160 A1.046
1.6	03.90 - 04.93	63	159 A3.000
1.6 i.e.	06.90 - 07.92	57	159 A3.046
1.6 i.e.	06.92 - 08.96	55	159 A3.048
Tempra S.W. (159) 1.4 i.e.	10.92 - 08.96	51	160 A1.046
1.6	12.90 - 04.93	63	159 A3.000
1.6 i.e.	10.90 - 08.96	57	159 A3.046
1.6 i.e.	10.92 - 08.96	55	159 A3.048
Tipo (160) 1.4 i.e.	05.89 - 04.95	57	159 A2.000
1.6	01.88 - 10.91	61	160 A2.000
1.6 i.e.	07.90 - 01.93	57	159 A3.046
1.6 i.e.	10.92 - 04.95	55	159 A3.048
Uno 70 (146A/E) 1.4 i.e.	09.89 - 12.93	51	160 A1.046
1.4 i.e.	09.89 - 12.93	53	146 C1.000
1.4 S	09.89 - 10.92	52	160 A1.048
Lancia Delta II (836) 1.4 i.e.	10.94 - 08.99	51	160 A1.046

T646C K081 50 60 60 70 K091 30 — alternative T043B

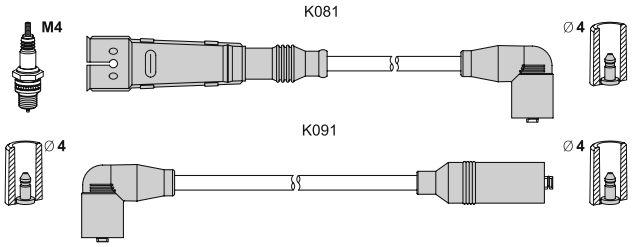

Seat Ibiza II (6K1) 1.3 i	03.93 - 08.99	40	2G/AAV
VW Polo (86C, 80) 1.0	05.84 - 10.86	29	GL
1.0	08.85 - 01.92	33	HZ
1.0 cat	08.89 - 09.94	33	AAU/ACM
1.3	08.83 - 07.88	40	MH
1.3	06.84 - 09.89	55	GK
1.3 cat	07.87 - 09.94	40	NZ/2G
1.3 cat	10.89 - 11.90	55	3F
Polo Classic (86C, 80) 1.0	01.85 - 10.86	29	GL
1.0	08.86 - 09.94	33	AAU/HZ/AAK
1.3	08.85 - 07.87	40	MH/HK
1.3 cat	07.87 - 09.94	40	NZ/MH
Polo Coupe (86C, 80) 1.0	06.84 - 10.86	29	GL
1.0	08.85 - 01.92	33	HZ
1.0 cat	08.89 - 09.94	33	AAU/AAK/ACM
1.3	08.85 - 06.87	40	MH/HK
1.3	06.84 - 09.89	55	GK
1.3	03.91 - 09.94	57	3F
1.3 cat	07.87 - 08.94	40	NZ/2G/MH/AAV
1.3 cat	10.89 - 11.90	55	3F
1.3 G40	08.90 - 09.94	83	PY
1.3 G40	01.87 - 08.90	85	PY
Polo Van (86CF) 1.0	08.92 - 07.94	33	AAU
1.3	08.92 - 07.94	40	AAV
Polo Van (6NF) 1.0	10.94 - 12.99	33	AAU

T647B K010 30 40 40 40 K327 40

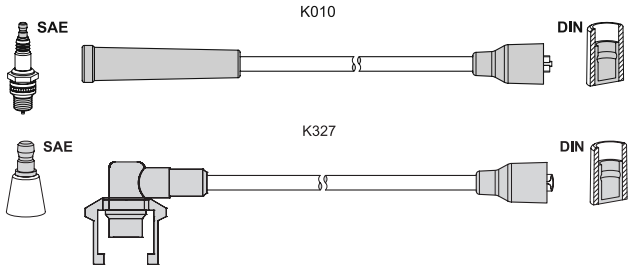

Renault Twingo (C06_) 1.2	03.93 - 10.96	40	C3G 702/C3G 700
Twingo Van (S06_) 1.2	03.93 - 05.96	40	C3G 702/C3G 700

T648B K125 45 47 56 83 85 96 -

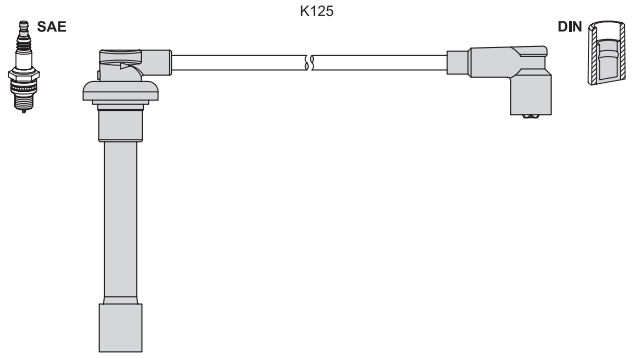

Honda Accord VII Coupé 3.0	02.98 - 06.03	147	J30A1

T649C K081 50 50 60 70 K091 60 **alternative T044B**

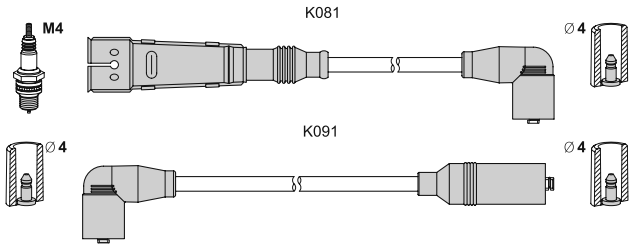

VW Golf II (19E, 1G1) 1.0	08.85 - 10.91	37	HZ
1.3 cat	06.86 - 12.92	40	NZ
1.8 i cat	08.87 - 10.91	66	GX
1.8 i Syncro	08.87 - 10.91	66	RP
1.8 Syncro	02.86 - 07.91	66	GX
Jetta II (19E, 1G2) 1.3	01.84 - 06.87	40	HK
1.3 cat	06.87 - 12.91	40	NZ/2G
Passat (32B) 1.3	08.80 - 07.86	44	EP
Passat Variant (32B) 1.3	08.80 - 07.86	44	EP
Transporter III Bus 1.9	08.82 - 07.92	44	DF
1.9	08.82 - 07.92	57	DG
1.9	01.83 - 07.85	61	DH
1.9	08.83 - 07.85	66	GW
1.9 Syncro	02.85 - 07.92	57	DG
2.1	10.86 - 07.92	64	SR
2.1	08.85 - 07.92	70	MV
2.1	08.85 - 07.92	82	DJ
2.1 cat	06.89 - 07.92	70	MV
2.1 i	07.89 - 07.92	68	SS
2.1 Syncro	10.86 - 07.92	64	SR
2.1 Syncro	08.85 - 07.92	70	MV
2.1 Syncro	01.86 - 07.92	82	DJ
Transporter III Flatbed 1.9	09.82 - 07.92	44	DF
1.9	08.82 - 07.92	57	DG
1.9	10.84 - 02.89	61	DH
1.9 Syncro	12.84 - 07.92	57	DG
2.1	08.85 - 07.92	70	MV
2.1	03.86 - 07.92	82	DJ
2.1 Syncro	08.85 - 07.92	70	MV
2.1 Syncro	03.86 - 07.92	82	DJ
Transporter III Van 1.9	10.82 - 07.92	44	DF
1.9	10.82 - 07.92	57	DG
1.9	08.83 - 02.89	66	GW
1.9	10.84 - 02.89	61	DH
1.9 Syncro	11.84 - 07.92	57	DG
2.1	08.85 - 07.92	70	MV
2.1	03.86 - 07.92	82	DJ
2.1 i	07.89 - 07.92	68	SS
2.1 Syncro	08.85 - 07.92	70	MV
2.1 Syncro	03.86 - 07.92	82	DJ
Vento (1H2) 1.4	11.91 - 09.98	40	ABD
1.4	11.91 - 09.98	44	ABD
1.6	09.92 - 09.98	55	ABU

T650C K080 30 40 50 60 K090 60 **alternative T035B**

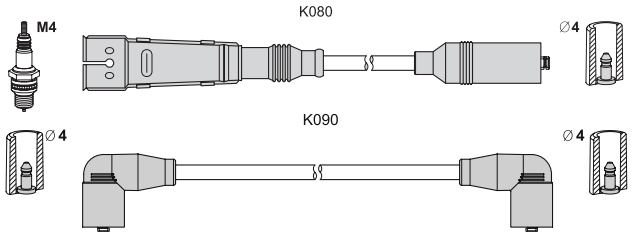

Seat Cordoba (6K2/C2) 1.6 i	05.94 - 06.99	55	1F
2.0 i	02.93 - 06.99	85	2E

< T650C

Seat Cordoba Vario (6K5) 1.6 i	05.97 - 06.99	55	1F
Ibiza II (6K1) 1.0	03.93 - 09.96	33	AAU
1.6 i	09.94 - 06.99	55	1F
Toledo I (1L) 1.6 i	05.91 - 12.93	52	1F
1.6 i	05.91 - 03.99	54	EZ/ABN/1F
1.6 i	01.93 - 03.99	55	1F
1.8 16V	05.91 - 03.99	92	PL
1.8 i	05.91 - 12.96	65	RP
VW Caddy I (14) 1.6	01.83 - 07.92	55	EW
1.8	08.85 - 07.92	70	JH
Caddy II Combi (9K9B) 1.6	11.95 - 05.97	55	1F
Caddy II Van (9K9A) 1.6	11.95 - 05.97	55	1F
Corrado (53I) 1.8 G60	09.88 - 09.93	118	PG
2.0 i	04.93 - 12.95	85	2E
Golf I Cabriolet (155) 1.6	04.86 - 02.90	53	RE
1.6	08.83 - 04.92	55	EW/HN
1.8	08.83 - 09.92	66	EX
1.8	08.83 - 04.93	70	JH
1.8	08.82 - 12.89	82	DX
Golf II (19E, 1G1) 1.6	10.86 - 12.92	51	PN
1.6	02.86 - 10.91	53	RF
1.6	08.83 - 07.92	55	HM/EZ
1.8	08.86 - 01.90	62	RH
1.8	08.84 - 10.91	66	GX/GU/HV
1.8 GTI	08.83 - 10.91	82	EV/GZ/PB
1.8 GTI	08.85 - 10.87	79	RD
1.8 GTI cat	01.87 - 10.91	79	PF
Jetta II (19E, 1G2) 1.6	10.86 - 10.91	51	PN
1.6	03.86 - 10.91	53	RF
1.6	01.84 - 07.92	55	HM/EZ
1.8	08.86 - 01.90	62	RH
1.8	08.84 - 10.91	66	GX/GU/HV
1.8	08.85 - 10.87	79	RD
1.8	01.84 - 10.91	82	EV/GZ/PB
1.8 cat	08.87 - 10.91	66	GX/RP
1.8 cat	01.87 - 10.91	79	PF
1.8 Syncro	08.87 - 07.88	62	RH
1.8 Syncro	08.87 - 12.88	66	RP/GU
1.8 Syncro	08.88 - 07.91	72	1P
Passat (32B) 1.6	08.87 - 03.88	51	PP
1.6	02.86 - 03.88	53	RL
1.6	01.85 - 03.88	55	WV/YN
1.6	08.80 - 03.88	55	DT
1.8	05.86 - 03.88	64	RM
1.8	01.83 - 03.88	66	DS/JN/JV
Passat (3A2, 35I) 1.6	02.88 - 09.91	53	EZ /1F
1.6	02.88 - 12.88	55	ABN/EZ
1.8	08.90 - 08.96	55	AAM
1.8	02.88 - 08.96	66	RP/ADZ
1.8	04.88 - 07.93	79	PF
1.8	04.88 - 07.92	82	PB
1.8 G60 syncro	08.88 - 08.96	118	PG
Passat Sedan (32B) 1.6	01.85 - 03.88	53	RL
1.6	01.85 - 03.88	55	DT
1.6	08.87 - 03.88	51	PP
1.8	01.85 - 03.88	66	DS/JN
1.8	05.86 - 03.88	64	RM
Passat Variant (32B) 1.6	08.87 - 03.88	51	PP
1.6	02.86 - 03.88	53	RL
1.6	01.85 - 03.88	55	WV/YN
1.6	08.80 - 03.88	55	DT
1.8	05.86 - 03.88	64	RM
1.8	01.83 - 03.88	66	DS/JN/JV
1.8 Syncro	01.86 - 03.88	66	DS/JN
Passat Variant (3A5) 1.6	04.88 - 09.91	53	EZ /1F
1.6	04.88 - 12.88	55	EZ

T 650C ▶

< T650C			
VW Passat Variant (3A5) 1.8	08.90 - 05.97	55	AAM
1.8	02.88 - 05.97	66	RP/ADZ
1.8	04.88 - 07.90	79	PF
1.8	04.88 - 07.92	82	PB
1.8 G60 Syncro	08.88 - 05.97	118	PG
Polo Classic 75 (6KV2) 1.6	11.95 - 09.01	55	ALM/AEE
1.6	11.95 - 09.97	55	1F
Polo Variant (6KV5) 1.6	05.97 - 09.01	55	ALM/AEE
Santana (32B) 1.3 CX	08.84 - 12.85	44	EP
1.6	08.81 - 12.84	55	DT
1.8	01.83 - 12.84	66	DS
Scirocco (53B) 1.6	04.86 - 07.90	53	RE
1.6	01.83 - 12.89	55	EW
1.8	08.83 - 07.92	66	EX
1.8	11.85 - 07.92	70	JH
1.8	08.82 - 12.89	82	DX

T651C K080 60 50 40 35 K091 55 — **alternative T036B**

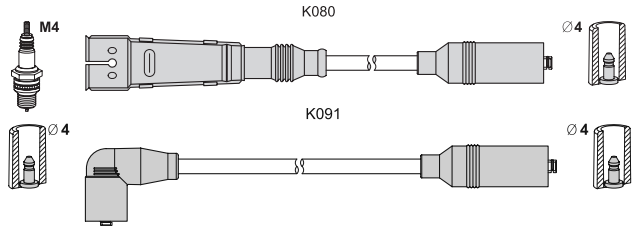

Seat Cordoba (6K2/C2) 1.8 i	02.93 - 06.99	66	ADZ
Ibiza II (6K1) 1.8 i	03.93 - 08.99	66	ADZ
Toledo I (1L) 1.8 i	11.93 - 12.96	66	ADZ
VW Golf II 1.8 GTI G60 Syncro	08.88 - 07.91	118	PG/1H
Golf III (1H1) 1.8	11.91 - 08.97	66	ACC/ADZ
1.8 Syncro	01.93 - 08.97	66	ADZ
2.0	11.91 - 08.97	85	ADY/AKR/AGG
2.0 Syncro	08.95 - 08.97	85	AGG
Golf III Cabriolet (1E7) 1.8	07.93 - 05.98	66	ADZ
2.0	07.93 - 05.98	85	ADY/AKR/AGG
Golf III Variant (1H5) 1.8	07.93 - 04.99	66	ADZ
1.8 Syncro	10.94 - 04.99	66	ADZ
2.0	07.93 - 04.99	85	ADY/AKR/AGG
2.0 Syncro	08.95 - 04.99	85	AGG
Golf IV Cabriolet (1E7) 1.8	06.98 - 06.02	66	ADZ/ANP
2.0	06.98 - 06.02	85	AKR/AGG
Polo Classic 90 (6KV2) 1.8	01.97 - 09.01	66	ADZ/ADD/ABS
Polo Variant (6KV5) 1.8	05.97 - 09.01	66	ADZ
Vento (1H2)	11.91 - 09.98	66	ADZ
2.0	11.91 - 09.98	85	ADY/AKR/AGG

T654C K081 40 50 60 70 K090 60 — **alternative T045B**

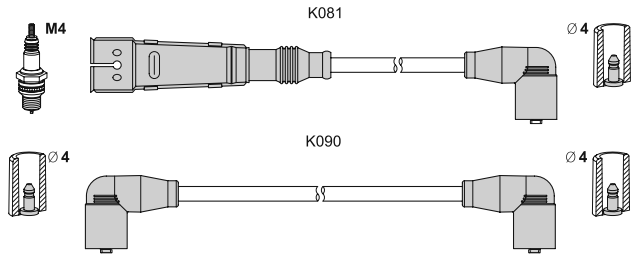

Seat Ibiza I (021A) 1.5 i	04.91 - 05.93	74	021 B.2000
Ibiza II (6K1) 1.6 i	03.93 - 08.99	55	ABU
Inca (6K9) 1.6 i	06.97 - 09.00	55	ALM/AEE
VW Caddy II 75 Van (9K9A) 1.6	06.97 - 09.00	55	AEE
Caddy II Combi (9K9B) 1.6	06.96 - 12.00	55	AEE
Caddy II Pick-up (9U7) 1.6	11.95 - 09.00	55	AEE
Derby (86C, 80) 1.3	08.83 - 12.84	40	HK

< T654C			
VW Golf II (19E, 1G1) 1.3	08.83 - 06.87	40	MH/HK
Golf III (1H1) 1.4	10.91 - 08.97	44	AEX
1.6	09.92 - 08.97	55	ABU/AEA/AEE
Golf III Variant (1H5) 1.4	07.93 - 04.99	44	AEX/APQ
1.6	07.93 - 12.97	55	ABU/AEA/AEE
Polo 45 (6N1) 1.0	10.94 - 09.96	33	AEV
Polo 55 (6N1) 1.3	10.94 - 07.95	40	ADX
Polo 75 (6N1) 1.6	10.94 - 10.99	55	AEA/AEE
Vento (1H2) 1.4	11.91 - 09.98	44	AEX
1.6	09.92 - 09.98	55	AEA/AEE

T655B K250 55 55 70 70 -

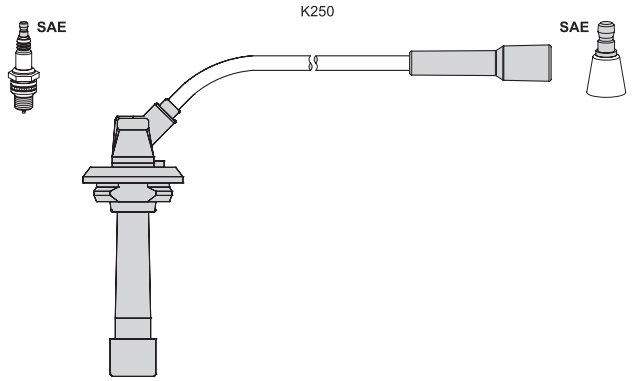

Subaru Legacy Lancaster 2.5 4WD	06.98 - 04.01	123	EJ253/EJ254
2.5 4WD	05.01 - 05.03	125	EJ253/EJ254

T656C K081 60 60 60 60 K091 60 — **alternative T047B**

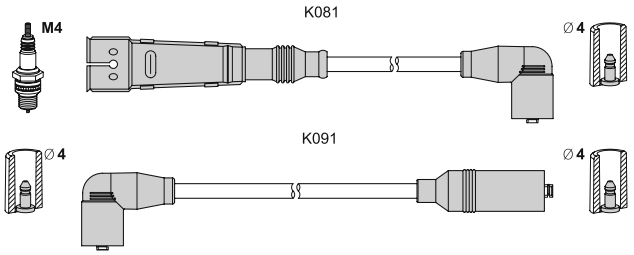

VW Transporter IV Bus 1.8	12.90 - 07.92	49	PD
2.0	09.90 - 04.03	62	AAC
Transporter IV Flatbed 2.0	07.90 - 04.03	62	AAC
Transporter IV Van 2.0	07.90 - 04.03	62	AAC

T657C K081 60 60 60 60 K090 60 — **alternative T086B**

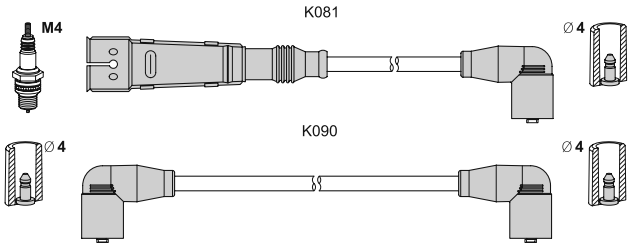

VW Golf I Cabriolet (155) 1.8	08.89 - 03.93	72	2H

T658C K081 70 60 55 40 K090 50 — alternative T048B

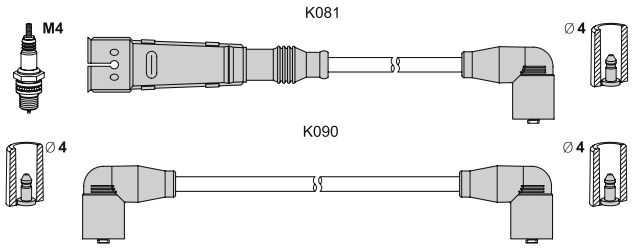

Seat Cordoba Vario 1.6 i	09.96 - 06.99	55	ALM/AEE
VW Polo 55 (6N1) 1.4	08.95 - 10.99	40	AEX
Polo 60 (6N1) 1.4	07.95 - 10.99	44	AEX
Polo Classic 60 (6KV2) 1.4	12.95 - 09.01	44	AEX
Polo Van (6NF) 1.4	05.98 - 12.99	44	AEX
Polo Variant (6KV5) 1.4	05.97 - 09.01	44	AEX

T659C K390 79 77 65 66 58 -

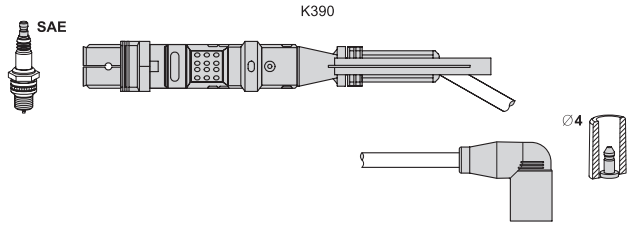

Seat Toledo II (1M2) 2.3 V5	04.99 - 05.01	110	AGZ
VW Bora (1J2) 2.3 V5 4mot	05.00 - 10.00	110	AGZ
Bora Combi 2.3 V5 4mot	05.00 - 10.00	110	AGZ
Golf IV Variant 2.3 V5	05.00 - 02.01	110	AGZ
2.3 V5 4motion	05.00 - 02.01	110	AGZ
Passat (3B2) 2.3 VR5 4mot	05.98 - 11.00	110	AGZ
Passat Var. (3B5) 2.3 VR5	04.98 - 11.00	110	AGZ

T662C K081 70 70 60 40 40 40 K090 40 — alternative T037B

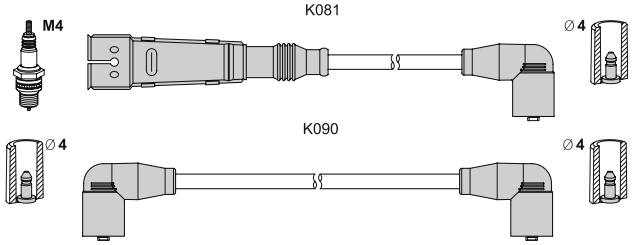

VW LT 28-35 I Bus 2.4	12.82 - 07.92	66	DL
2.4 i	08.89 - 06.96	69	1E
LT 28-35 I Flatbed 2.4	12.82 - 07.92	66	DL
2.4 i	08.89 - 06.96	69	1E
LT 28-35 I Van 2.4	12.82 - 07.92	66	DL
2.4 i	08.89 - 06.96	69	1E
LT 40-55 I Flatbed 2.4	08.85 - 07.89	66	DL
2.4 i	03.94 - 06.96	69	1E
2.4 syncro	12.82 - 07.89	66	DL
LT 40-55 I Van (291-512) 2.4	12.82 - 07.92	66	DL
2.4 4WD	12.82 - 07.92	66	DL
2.4 i	01.93 - 06.96	69	1E

T663B K071 35 35 30 30 K062 25

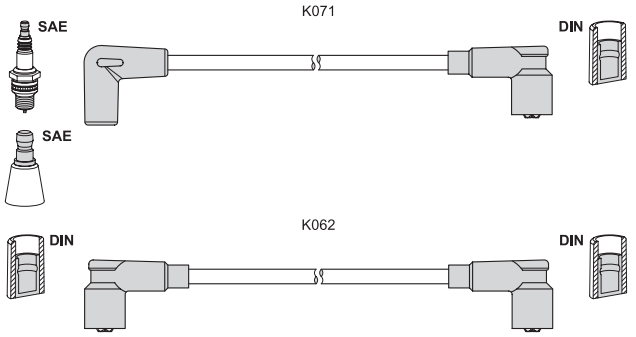

Rover Mini MK I 1000 1.0	01.92 - 06.93	30	99 HD 81
Mini MK I 1300 1.3	10.92 - 11.00	37	12 A2B
1.3	01.92 - 04.95	39	12 A2D
1.3	01.91 - 12.91	45	12 A2A
1.3	01.92 - 09.96	46	12 A2E/12 A2L
Mini MK I Cabrio (XN) 1.3	09.92 - 04.95	46	12 A2E

T664B K368 66 55 52 37 K071 60

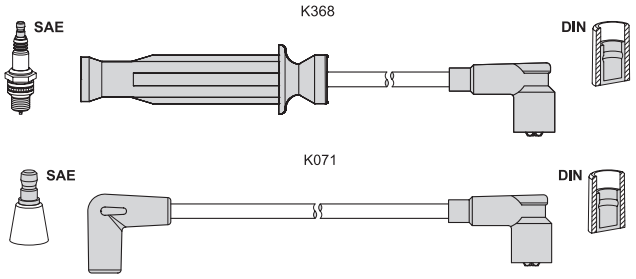

Rover 820 (XS) 2.0 Sport	04.94 - 03.96	145	20 T4G
820 Hatchback 2.0 Sport	04.94 - 03.96	145	20 T4G

T665B K368 65 55 52 40 K061 75

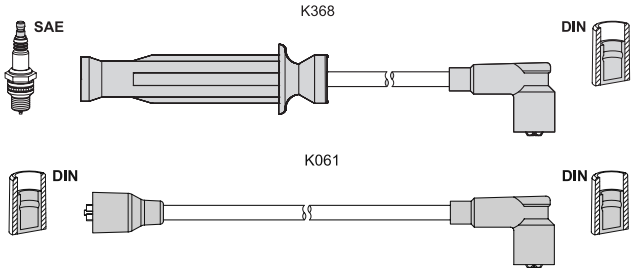

Rover 820 (XS) 2.0	10.88 - 10.91	74	
820e (XS) 2.0e	10.86 - 10.91	88	20 HS

T666B K368 65 55 52 40 K061 55

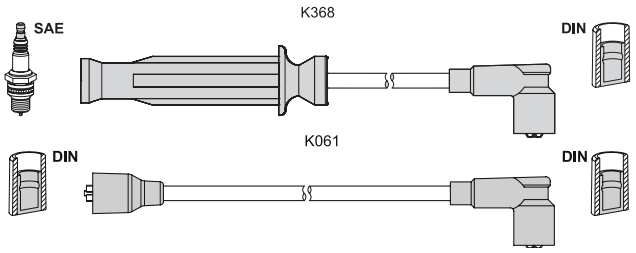

Rover 220 Coupe 2.0 GSi	05.94 - 06.99	100	20 T4H
420 (XW) 2.0 GSi/SLi/GTi	01.93 - 04.95	100	20 T4H
2.0 GTi/GSi/Vitesse	02.92 - 04.95	103	20 M4F
2.0 Turbo	01.93 - 04.95	147	20 T4G

T 667B ▶

T667B K010 50 55 60 K012 60 65 75 80 85 K061 65

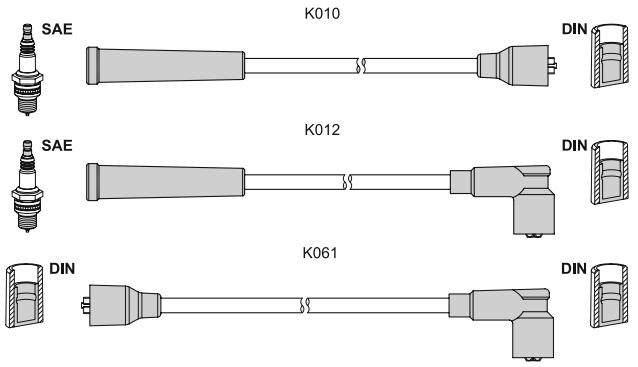

Landrover Range Rover I 3.5	08.81 - 09.90	93	11 D
3.9 cat	11.88 - 07.94	127	37 D/38 D
3.9 Vogue SEI	11.88 - 07.94	134	36 D/35 D
4.3 Vogue LSE	09.92 - 07.94	149	40 D

T668B K010 30 30 40 40 K061 50

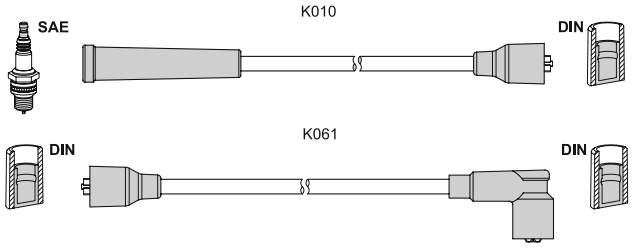

Renault 4 (112_) 0.8	10.62 - 09.83	19	800 705/800
0.8	10.83 - 10.88	21	800 705/B1B 707
0.8	09.71 - 12.88	25	800 01
1.1	06.78 - 06.90	25	688 712
4 Van (R21_, R23_) 0.8	09.66 - 12.88	25	800 01
0.8	04.83 - 07.89	21	800 705/B1B 707
1.1	10.76 - 07.89	25	C1E 714/C1E_/688_

T669B K127 30 40 50 60 K316 50

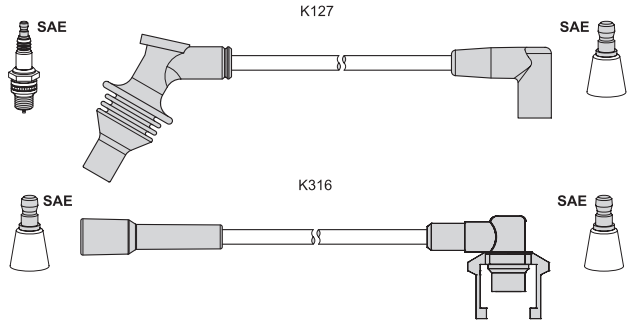

Renault 19 II (B/C53_) 1.8	05.94 - 12.95	79	F3P 765/F3P 682
1.8	04.92 - 05.94	81	F3P 700
19 II Cabriolet 1.8	07.94 - 12.95	79	F3P 765/_682/_764
19 II Chamade (L53_) 1.8	05.92 - 09.94	67	F3P 765
1.8	05.92 - 11.95	79	F3P 706/F3P 700
1.8	05.94 - 12.95	79	F3P 682
1.8	04.92 - 05.94	81	F3P 700
Clio I (B/C57_, 5/357_) 1.8	01.91 - 12.95	65	F3P 710 /F3P 714
1.8	08.90 - 04.96	66	F3P 755
1.8 RSi	01.93 - 08.95	80	F3P 712
1.8 RSi	08.95 - 12.95	79	F3P 758

T670B K167 30 40 45 55 K316 90

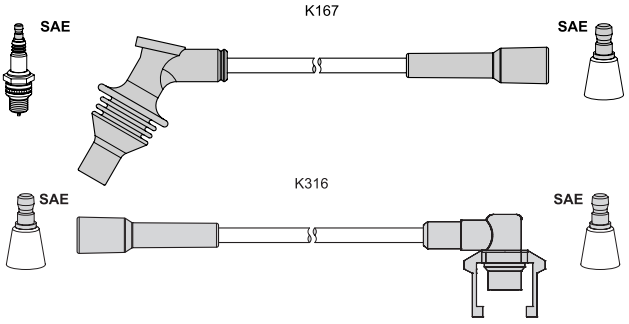

Renault Clio I 1.8	08.94 - 09.98	66	F3P 755 /F3P 754
Laguna I (B56_, 556_) 1.8	11.93 - 03.01	66	F3P 720
1.8	08.95 - 03.01	69	F3P 720/F3P 724
2.0	11.93 - 05.95	83	F3R 722/F3R 723
Laguna Grandtour 1.8	09.95 - 03.01	69	F3P 720/F3P 724
2.0	09.95 - 03.01	83	F3R 722/F3R 723

T671B K040 50 50 60 70 K061 50

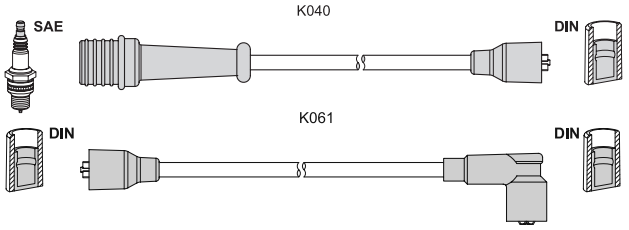

Peugeot 505 (551A) 2.2	03.86 - 12.93	84	851X (ZDJL)
2.2	05.81 - 10.84	85	851 (ZDJ)
2.2 GTI	08.83 - 12.93	90	851B (ZDJL)
2.2 GTI	08.83 - 12.93	96	

T672H K026 30 30 30 40 -
T673S K026 30 30 30 40 -

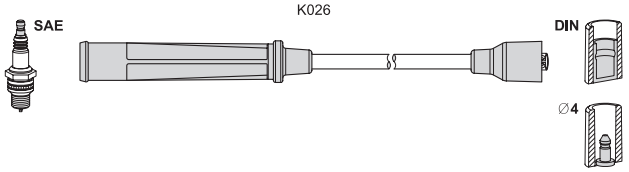

AZLK 2141 Svjatogor 2.0i	97 -	77	F3R272
2141 J. Dolgorukij 2.0i	97 -	77	F3R272
2142 2.0i	98 -	77	F3R272

T674C K087 60 65 45 30 - alternative T059B

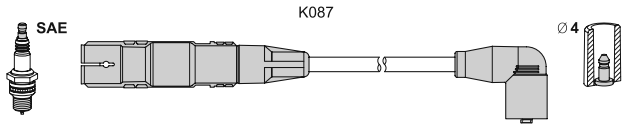

Audi A3 (8L1) 1.6	09.96 - 05.03	74	AKL/APF/AEH
A4 (8D2, B5) 1.6	11.94 - 10.00	74	ARM
A4 Avant (8D5, B5) 1.6	11.94 - 09.01	74	ARM
Seat Leon (1M1) 1.6	11.99 - 06.06	74	AKL/APF/AEH
Toledo II (1M2) 1.6	04.99 - 09.00	74	AKL/APF/AEH
Skoda Octavia (1U2) 1.6	02.97 - 12.07	74	AKL/AEH
Octavia Combi (1U5) 1.6	07.98 - 12.07	74	AKL/AEH
2.0 4x4	08.00 - 09.04	85	AZH
VW Bora (1J2) 1.6	10.98 - 05.05	74	AKL/APF/AEH
Bora Combi (1J6) 1.6	05.99 - 05.05	74	APF/AEH
Polo Classic 100 1.6	12.95 - 09.01	74	AEH/AKL
Polo Variant (6KV5) 1.6	05.97 - 09.01	74	AKL/AEH

T675C K081 85 75 75 55 55 K090 35 alternative T094B

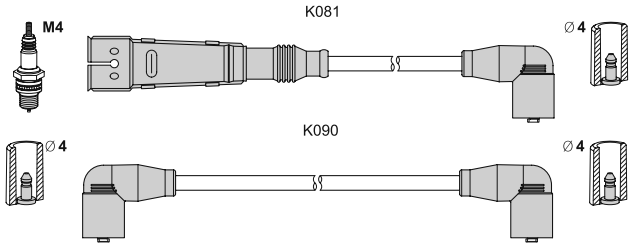

Audi A6 (4A, C4) 2.3	06.94 - 12.95	98	AAR
2.3 quattro	06.94 - 12.95	98	AAR
A6 Avant (4A, C4) 2.3	06.94 - 12.95	98	AAR
2.3 quattro	06.94 - 12.95	98	AAR

T676H K010 34 38 38 47 -
T677S K010 34 38 38 47 -
T678M K010 34 38 38 47 -

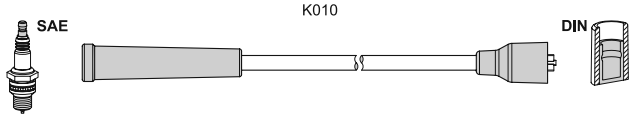

GAZ 2705 Gazelle Bussin. 2.9i Euro 3	- 06	79	UMZ 4216
3221 Gazelle Bussin. 2.9i Euro 3	- 06	79	UMZ 4216
3302 Gazelle Bussin. 2.9i Euro 3	- 06	79	UMZ 4216
2217 Sobol Bussin. 2.9i Euro 3	- 06	79	UMZ 4216
2310 Sobol Bussin. 2.9i Euro 3	- 06	79	UMZ 4216
2752 Sobol Bussin. 2.9i Euro 3	- 06	79	UMZ 4216
UAZ 3909 2.9i	08.97 -	77	UMZ 4213
3160, 3162 2.9i	08.97 - 12.03	77	UMZ 4213
Hunter 2.9i	11.03 -	77	UMZ 4213

T679M K358 22 22 25 25 -

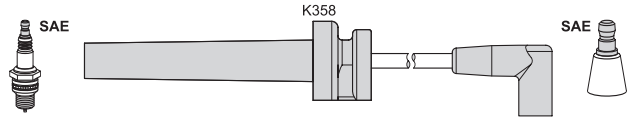

application → T106S

T684H K023 37 40 50 60 -

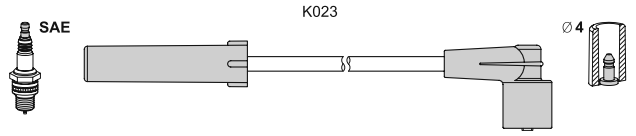

application → T395S

T694S K052 15 20 35 40 -

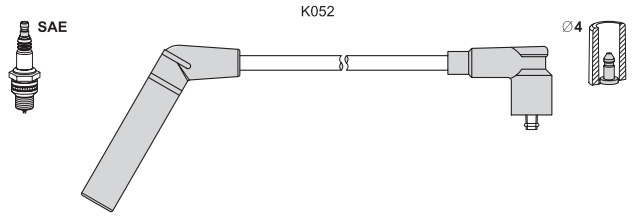

Dacia Nova 1.6 i	04.96 - 03.03	53

T696H K140 35 25 25 20 -

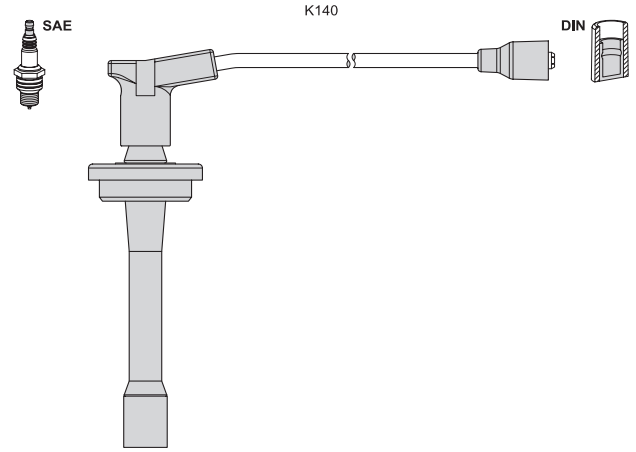

application → T712S

T697B K490 14 25 31 36 -

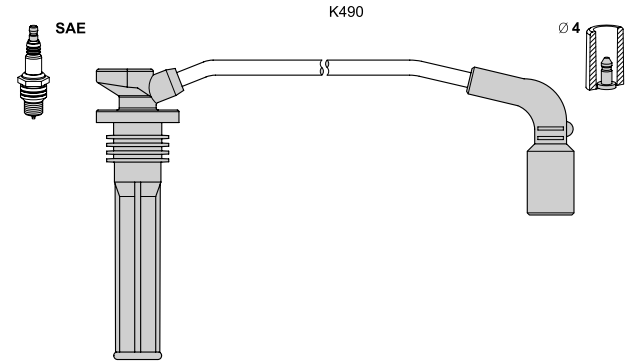

Chevrolet Aveo CC 1.2	04.08 -	62	LMU/B12D1
1.2 LPG	04.08 -	62	B12D1
Aveo CC (T300) 1.2	03.11 -	51	A 12 XEL
1.2	03.11 -	63	A 12 XER
Aveo Sedan (T250) 1.5	05.05 -	62	LX6
Aveo Sedan (T300) 1.2	03.11 -	63	A 12 XER
1.2	03.11 -	51	A 12 XEL
Spark (M300) 1.0	03.10 -	50	B10D1
1.0 LPG	07.10 -	48	B10D1
1.0 LPG	03.10 -	50	B10D1
1.2	03.10 -	60	B12D1
1.2 LPG	03.10 -	58	B12D1

T698B K053 90 80 70 60 K070 50

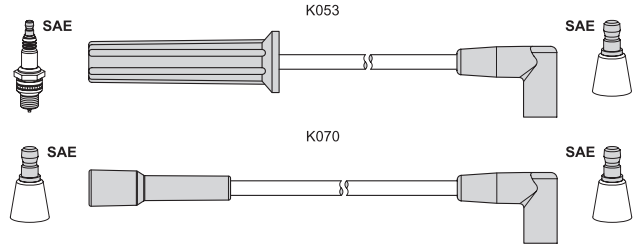

application → T737B

T 699B ▶

T699B K054 50 45 40 K015-30 -

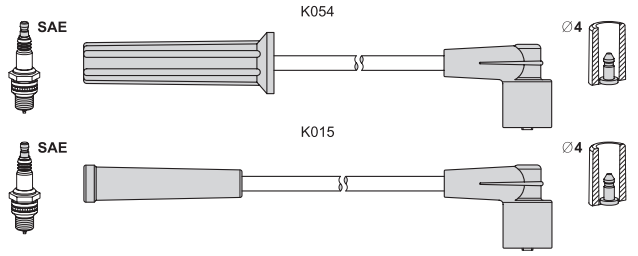

application → T738B

T700C K081 80 80 70 60 50 K090 40 alternative T050B

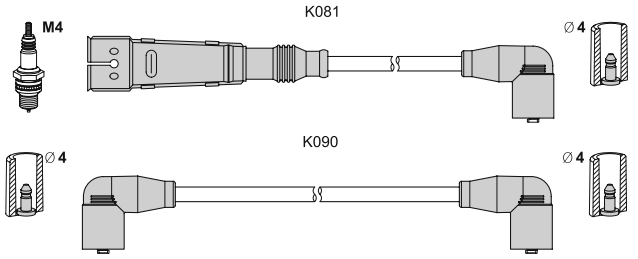

Audi 80 (8C, B4) 2.3 E	09.91 - 12.94	98	NG
2.3 E quattro	09.91 - 12.94	98	NG
80 Avant (8C, B4) 2.3 E	07.92 - 01.96	98	NG
2.3 E quattro	09.91 - 11.94	98	NG
90 (81, 85, B2) 2.0	10.84 - 03.87	85	JS/HP
2.0	03.86 - 03.87	83	SK
2.2	01.85 - 03.87	85	KX
2.2	10.84 - 03.87	100	KV
2.2 E quattro	08.85 - 03.87	88	JT
2.2 E quattro	11.84 - 03.87	100	KV
90 (89, 89Q, 8A, B3) 2.0	07.88 - 09.91	85	PS
2.2 E	04.87 - 07.91	100	KV
2.2 E quattro	04.87 - 09.91	100	KV
2.3 E	04.87 - 07.91	100	NG
2.3 E	04.87 - 09.91	98	NG
2.3 E quattro	04.87 - 07.91	100	NG
2.3 E quattro	04.87 - 09.91	98	NG
100 (44, 44Q, C3) 2.0	08.86 - 11.87	83	SL
2.0	08.84 - 12.87	85	KP
2.0 cat	01.88 - 11.90	85	RT
2.2	10.84 - 09.86	85	KZ
2.2	08.84 - 12.88	101	KU
2.2 cat	06.89 - 11.90	101	KU/HX
2.2 E quattro	08.85 - 07.86	88	PX
2.2 E Turbo quattro	08.86 - 11.90	121	MC
2.2 quattro	08.84 - 12.88	101	KU
2.2 quattro cat	06.89 - 11.90	101	KU/HX
2.2 Turbo	08.86 - 11.90	121	MC
2.3 E	10.86 - 11.90	100	NF
2.3 E	01.90 - 11.90	98	AAR
2.3 E quattro	08.86 - 11.90	100	NF
2.3 E quattro	01.90 - 11.90	98	AAR
100 (4A, C4) 2.3 E	12.90 - 06.94	98	AAR
2.3 E quattro	12.90 - 06.94	98	AAR
100 Avant 2.0	09.86 - 11.87	83	SL
2.0 E	01.85 - 12.87	85	KP
2.0 E cat	01.88 - 11.90	85	RT
2.2	10.84 - 09.86	85	KZ
2.2	08.84 - 12.88	101	KU
2.2 cat	06.89 - 11.90	101	KU/HX
2.2 E quattro	08.85 - 07.86	88	PX
2.2 quattro	08.84 - 12.88	101	KU
2.2 quattro cat	06.89 - 11.90	101	KU/HX

< T700C

Audi 100 Avant 2.2 Turbo	08.86 - 11.90	121	MC
2.2 Turbo quattro	08.86 - 11.90	121	MC
2.3	08.86 - 11.90	100	NF
2.3	03.90 - 11.90	98	AAR
2.3 E quattro	08.86 - 11.90	100	NF
2.3 quattro	01.90 - 11.90	98	AAR
100 Avant (4A, C4) 2.3 E	09.91 - 06.94	98	AAR
2.3 E quattro	09.91 - 06.94	98	AAR
200 (44, 44Q) 2.1 Turbo	08.83 - 01.88	134	KG
2.1 Turbo quattro	08.83 - 09.86	134	KG
2.2	08.84 - 07.85	101	KU
2.2 Turbo	08.85 - 09.91	121	MC
2.2 Turbo quattro	01.85 - 12.91	121	MC
2.3	11.86 - 09.91	100	NF
200 Avant 2.1 T quattro	09.83 - 01.88	134	JY/KG
2.2 Turbo	08.85 - 09.91	121	MC
2.2 Turbo quattro	09.83 - 12.90	121	MC
2.3	11.86 - 09.91	100	NF
Cabriolet (8G7, B4) 2.3 E	05.91 - 07.94	98	NG
Coupe (81, 85) 2.0	09.83 - 07.86	85	JS/HP
2.0	03.86 - 04.88	83	SK
2.2 GT	07.81 - 10.87	85	KX
2.2 GT	09.84 - 10.88	100	KV/HY
2.2 quattro	10.84 - 10.88	100	KV
2.2 quattro	08.85 - 10.88	88	JT
2.3	01.87 - 10.88	100	NG
2.3 quattro	01.87 - 10.88	100	NG
Coupe (89, 8B) 2.3	10.88 - 07.94	100	NG
2.3	03.90 - 12.96	98	NG
2.3 quattro	11.88 - 12.92	100	NG
2.3 quattro	05.90 - 12.96	98	NG
VW Passat (32B) 2.0	08.83 - 03.88	85	JS
2.2	08.85 - 03.88	85	KX
2.2	01.85 - 03.88	100	KV
Passat Sedan (32B) 2.0	08.84 - 07.85	85	JS/HP
2.2	01.85 - 03.88	85	KX
Passat Variant (32B) 2.0	08.83 - 03.88	85	JS/HP
2.0 Syncro	05.84 - 03.88	85	JS
2.2	08.85 - 03.88	85	KX
2.2	01.85 - 03.88	100	KV
2.2 Syncro	08.85 - 03.88	88	JT
Santana (32B) 2.0	08.83 - 12.84	85	JS/HP

T701C K080 40 50 50 60 K091 40 alternative T038B

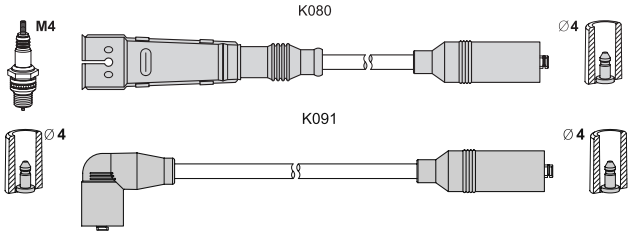

Audi 80 (81, 85, B2) 1.3	09.78 - 07.86	44	EP
1.6	02.86 - 07.86	54	SA
1.6	08.78 - 07.86	55	DT
1.8	01.83 - 08.86	66	DS/JV
1.8	08.83 - 08.86	68	JN
1.8 CC quattro	08.84 - 08.86	66	NE/JV
1.8 CC quattro	08.85 - 08.86	68	JN
1.8 GTE	10.84 - 08.86	82	DZ
1.8 GTE	08.85 - 07.86	81	PV
1.8 GTE quattro	08.84 - 08.86	82	DZ
1.8 GTE quattro	03.85 - 08.86	81	PV
80 (89, 89Q, 8A, B3) 1.4	08.86 - 07.88	48	SE
1.6	08.87 - 09.91	51	PP

< T701C

Audi 80 (89, 89Q, 8A, B3) 1.6	09.86 - 08.91	55	RN
1.6	08.90 - 10.91	75	ABB
1.8	10.86 - 01.90	55	RU
1.8	09.86 - 07.88	83	SD
1.8 quattro	09.86 - 08.90	83	SD
1.8 E	06.86 - 08.91	82	DZ
1.8 E quattro	09.86 - 08.91	82	DZ
1.8 S	09.86 - 12.90	65	SF
1.8 S	09.86 - 10.91	66	PM
1.8 S quattro	09.86 - 07.90	65	SF
1.8 S quattro	09.86 - 09.91	66	PM
2.0	10.90 - 08.91	82	AAD
2.0 E	08.88 - 10.90	83	3A
2.0 E quattro	08.88 - 09.90	83	3A
2.0 quattro	10.90 - 08.91	82	3A
2.0 quattro	10.90 - 08.91	85	AAD
80 (8C, B4) 1.6	09.91 - 12.94	52	ABM
2.0	09.91 - 12.94	66	ABT
2.0 E	09.91 - 12.94	85	ABK
2.0 E quattro	09.91 - 12.94	85	ABK
80 Avant (8C, B4) 2.0	07.92 - 01.96	66	ABT
2.0 E	07.92 - 01.96	85	ABK
Cabriolet (8G7, B4) 2.0 E	01.93 - 07.98	85	ABK
Coupe (89, 8B) 2.0	05.89 - 12.96	85	AAD
2.0	03.90 - 07.90	82	3A
2.0	05.89 - 03.90	83	3A

T702C K080 60 60 60 60 K091 40 — alternative T039B

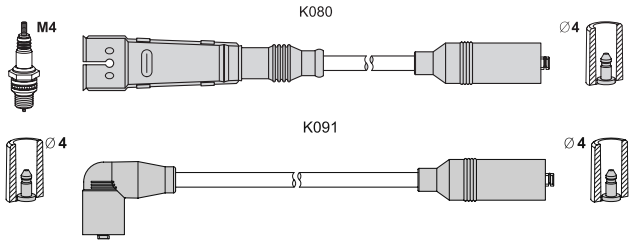

Audi 100 (4A, C4) 2.0 E	12.90 - 06.94	85	ABK/AAD
2.0 E quattro	12.90 - 07.92	85	AAD
100 Avant (4A, C4) 2.0 E	09.91 - 06.94	85	ABK/AAD
2.0 E quattro	12.90 - 07.92	85	AAD
A6 (4A, C4) 2.0	06.94 - 10.97	74	AAE
2.0	06.94 - 10.97	85	ABK
A6 Avant (4A, C4) 2.0	06.94 - 12.97	74	AAE
2.0	06.94 - 12.97	85	ABK

T703C K081 60 80 80 80 K091 30 — alternative T051B

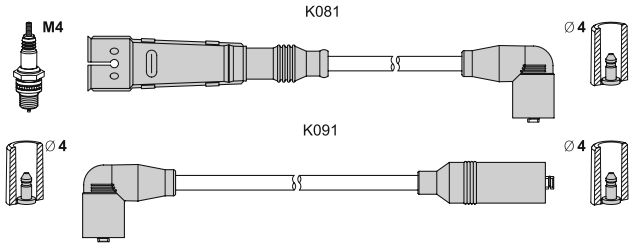

Audi 100 (44, 44Q, C3) 1.8	08.82 - 12.87	55	RS/DR
1.8	02.86 - 07.88	65	SH
1.8	08.83 - 07.89	66	JW /NP/DS
1.8 cat	03.85 - 11.90	66	PH/4B
1.8 quattro	08.86 - 07.90	65	SH
1.8 quattro	10.84 - 07.88	66	JW /NP
1.8 quattro cat	08.85 - 11.90	66	PH/4B
100 Avant 1.8	08.82 - 12.87	55	RS/DR
1.8	02.86 - 07.90	65	SH

< T703C

Audi 100 Avant 1.8	08.83 - 07.89	66	JW /NP/DS
1.8 cat	03.85 - 11.90	66	PH/4B
1.8 quattro	08.86 - 07.90	65	SH
1.8 quattro	10.84 - 07.88	66	JW /NP
1.8 quattro cat	08.85 - 10.90	66	PH/4B
Coupe (81, 85) 1.8 GT	09.82 - 10.88	66	DS/JV
1.8 GT	01.85 - 07.88	68	JN
1.8 GT	08.86 - 10.87	79	PV
1.8 GT	08.86 - 10.88	82	DZ
1.8 GT quattro	12.84 - 10.88	82	DZ
Coupe (89, 8B) 1.8	08.89 - 07.91	82	DZ

T704M K012 40 45 -

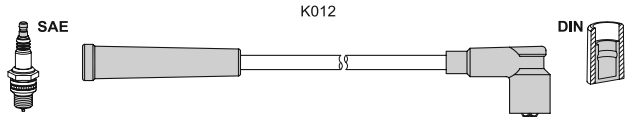

application → T627S

T705B K333 40 50 55 70 K324 40

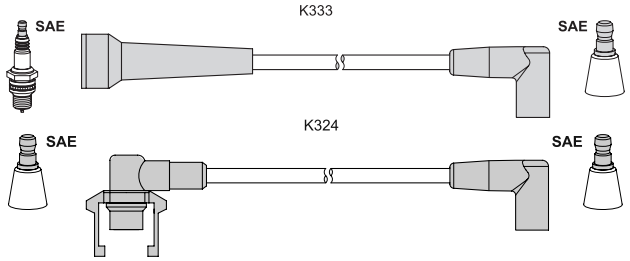

Renault 19 I (B/C53_) 1.7	09.88 - 04.92	54	F3N 741/F3N 740
1.7	09.88 - 04.92	66	F3N 743/F3N 742
19 I Cabriolet (D53_) 1.7	07.91 - 04.92	70	F3N 743/F3N 742
19 I Chamade (L53_) 1.7	10.89 - 04.92	54	F3N 741/F3N 740
1.7	07.88 - 04.92	66	F3N 743/F3N 742
1.7	09.88 - 12.92	68	F2N 720/F2N 721
19 II Chamade (L53_) 1.7	01.93 - 08.95	68	F2N 720/F2N 721
21 Combi (K48_) 1.7	06.87 - 04.89	64	F2N 752
1.7	10.86 - 12.88	65	F2N 710
21 Sedan (L48_) 1.7	06.87 - 04.89	64	F2N 752
1.7	03.86 - 03.93	65	F2N 710
1.7	09.89 - 02.94	66	F3N 723/F3N 722
1.7	03.86 - 02.94	69	F3N 723/F3N 722
Super 5 (B/C40_) 1.7	10.86 - 03.95	54	F3N 716 /F3N 717
1.7 i	10.86 - 08.91	69	F3N 722/F3N 702

T 706B ▶

T706B K328 50 70 80 95 K370 68 73 K326 70

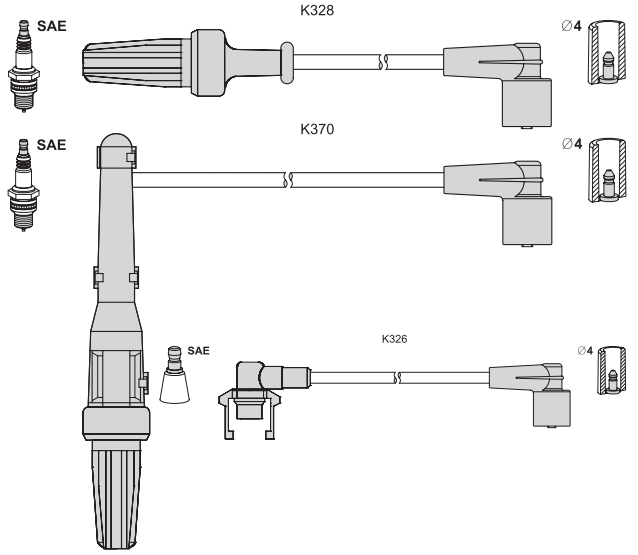

Renault Safrane I 3.0 V6	12.92 - 07.96	123	Z7X721/723/753/722
3.0 V6 4x4	12.92 - 07.96	123	Z7X721/723/Z7X 722
3.0 Biturbo 4x4	02.93 - 07.96	193	Z7X 726
Safrane II (B54_) 3.0 V6	07.96 - 12.00	123	Z7X 755

T707B K057 35 45 60 65 K317 70

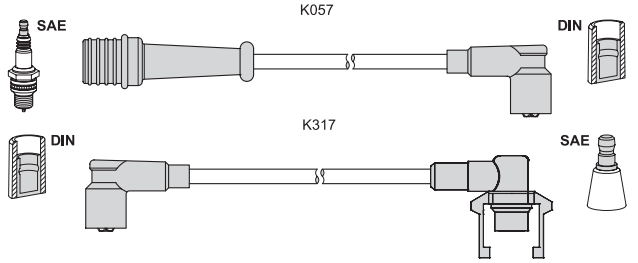

Renault 21 Combi (K48_) 2.0	06.86 - 12.88	85	J7R 750/J7R 751
21 Sedan (L48_) 2.0	05.91 - 10.93	78	J6R 758
2.0	03.86 - 12.88	85	J7R 750/J7R 751
25 (B29_) 2.0	04.84 - 12.92	74	J6R 763/707/760/706
Espace I (J11_) 2.0	01.88 - 12.90	74	J6R 734
2.0	07.84 - 12.90	80	J6R 234/J6R 236
2.0 i	01.89 - 12.90	87	J7R 760
2.0 i Quadra	03.88 - 12.92	87	J7R 760
2.2	07.86 - 12.90	79	J7T 770
2.2 Quadra	01.88 - 12.90	79	J7T 770
Espace II (J/S63_) 2.0	01.91 - 10.96	76	J7R 768
2.0	01.91 - 10.96	79	J7T 772/J7T 776/773
2.2 4x4	03.91 - 12.96	79	J7T 772/J7T 773

T708B K182 70 70 60 45 -

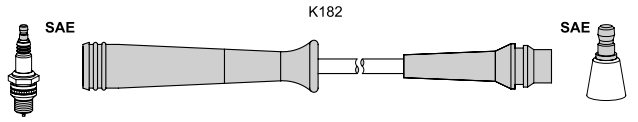

Renault Megane I 1.6 e	09.96 - 03.97	66	K7M 702/703/790
1.6 i	09.96 - 03.97	55	K7M 720
Megane I Cabriolet 1.6 e	10.96 - 03.97	66	K7M 702/K7M 703
Megane I Classic 1.6 e	09.96 - 03.97	66	K7M 702/703/790
1.6 i	09.96 - 03.97	55	K7M 720
Megane I Coach (DA) 1.6 e	03.96 - 03.97	66	K7M 702/K7M 703
Megane I Grandtour 1.6 e	03.99 - 08.03	66	K7M 702/K7M 703
Megane Scenic 1.6 e	01.97 - 03.97	66	K7M 702/K7M 703
1.6 i	01.97 - 03.97	55	K7M 720

T709B K335 30 30 35 40 -

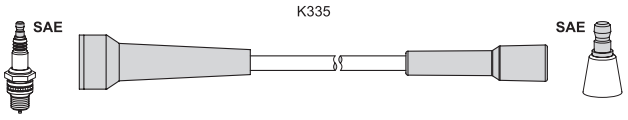

Renault Espace III (JE0_) 2.0	11.96 - 04.97	84	F3R 769/728/768
Laguna (B56_, 556_) 1.8	08.95 - 04.97	66	F3P 670
1.8	06.95 - 04.97	69	F3P 674
2.0	03.99 - 03.01	80	F3R 611
2.0	06.95 - 04.97	84	F3R 768
Laguna Grandtour 1.8	09.95 - 04.97	66	F3P 670
Megane I (BA0/1_) 2.0 i	03.99 - 08.03	80	F3R 751/F3R 750
2.0 i	01.96 - 08.03	84	F3R 751/F3R 750
Megane I Cabrio (EA) 2.0 i	04.97 - 08.03	84	F3R 750
2.0 i	03.99 - 08.03	80	F3R 791/F3R 796
Megane I Classic 2.0 i	03.99 - 08.03	80	F3R 791/751/F3R_
2.0 i	09.96 - 04.97	84	F3R 791/751/F3R_
Megane I Coach 2.0 i	03.99 - 08.03	80	F3R 791/F3R 796
2.0 i	03.96 - 04.97	84	F3R 751/F3R 750
Megane Scenic 2.0 i	01.99 - 09.99	80	F3R 796
2.0 i	01.97 - 04.97	84	F3R 751/F3R 750
2.0 RXE 4x4	05.97 - 10.99	84	F3R 750

T710B K055 70 60 55 50 K070 50

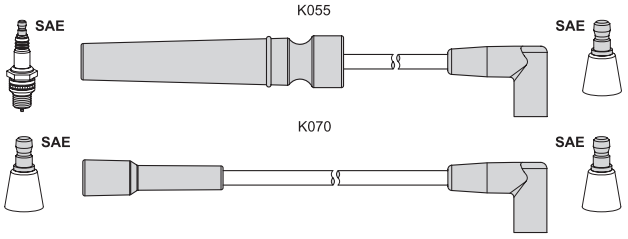

Daewoo Aranos 1.5	01.95 - 11.97	66	V15L
Cielo (KLETN) 1.5 16V	02.95 - 08.97	66	A15MF
Cielo Sedan 1.5 16V	02.95 - 08.97	66	A15MF
Espero (KLEJ) 1.5	10.97 - 09.99	55	G15MF
1.5 16V	02.95 - 06.99	66	A15MF
1.5 16V	10.93 - 09.94	65	A15MF
Nexia (KLETN) 1.5 16V	02.95 - 08.97	66	A15MF
Nexia Sedan 1.5 16V	02.95 - 08.97	66	A15MF
1.6	07.08 -	80	F16D3

T711B K056 50 45 40 35 -

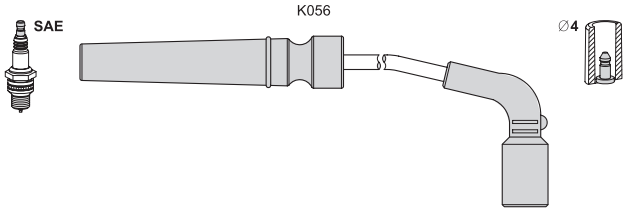

Chevrolet Aveo CC 1.4	04.08 -	74	A14 XER/LDT/F14D4
Aveo Sedan (T250) 1.4	03.06 -	69	F14D3/L14
1.4	01.08 -	74	F14D4
Cruze (J300) 1.6	05.09 -	91	F16D4
1.6	05.09 -	80	LXV/F16D3/LXT
1.6	05.09 -	83	F16D4
Kalos 1.4 16V	03.05 -	69	F14D3
Kalos Sedan 1.4 16V	03.05 -	69	F14D3
Rezzo 1.6	03.05 -	77	A16DMS
1.6	08.05 -	79	A16DMS
Tacuma 1.6	03.05 -	77	A16DMS
1.6	08.05 -	79	A16DMS
Daewoo Kalos (KLAS) 1.4 16V	04.03 -	69	F14D3
Kalos Sedan (KLAS) 1.4	05.03 - 12.04	69	F14D3

< T711B			
Daewoo Lacetti CC (KLAN) 1.4	02.04 -	70	F14D3
Lanos (KLAT) 1.6 16V	05.97 -	78	A16DMS
Lanos Sedan 1.6 16V	05.97 -	78	A16DMS
Nubira (KLAJ) 1.6 16V	05.97 -	78	A16DMS
Nubira Sedan 1.6 16V	05.97 -	78	A16DMS
1.6 16V	07.00 -	76	A16DMS
Nubira Wagon 1.6 16V	06.97 -	66	
1.6 16V	05.97 -	78	A16DMS
1.6 16V	12.00 -	76	A16DMS
Rezzo (KLAU) 1.6	09.00 -	77	A16DMS
1.8	09.00 -	66	
Tacuma (KLAU) 1.6	09.00 -	77	A16DMS
1.8	09.00 -	66	
ZAZ Lanos Hatch. 1.4 i 16V	12.11 -	74	F14D4
1.6 i 16V	01.97	77	A16DMS
Lanos Sedan 1.4 i 16V	12.11 -	74	F14D4
1.6 i 16V	01.97	77	A16DMS

T712S K140 35 25 25 20 -
T713M K140 35 25 25 20 -

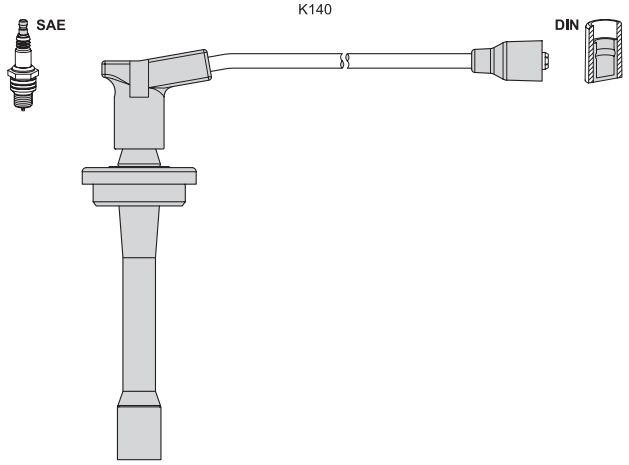

GAZ 2217 Sobol 2.3i 16V	98 -	81	ZMZ 4063
2310 Sobol 2.3i 16V	98 -	81	ZMZ 4063
2705 Gazel 2.3i 16V	97 -	81	ZMZ 4063
2.5i 16V	97 -	90	ZMZ 40522
2752 Sobol 2.3i 16V	98 -	81	ZMZ 4063
3102 Volga 2.3i 16V	85 - 92	106	ZMZ 4062
310221 Volga 2.3i 16V	85 - 92	106	ZMZ 4062
3110 Volga 2.3i 16V	97 -	106	ZMZ 4062
2.5i 16V	97 -	112	ZMZ 4052
3111 Volga 2.3i 16V	02 -	106	ZMZ 4062
2.5i 16V	02 -	112	ZMZ 4052
3221 Gazel 2.3i 16V	97 -	81	ZMZ 4063
2.5i 16V	97 -	90	ZMZ 40522
3302 Gazel 2.3i 16V	97 -	81	ZMZ 4063
2.5i 16V	97 -	90	ZMZ 40522
33023 Gazel 2.3i 16V	97 -	81	ZMZ 4063
2.5i 16V	97 -	90	ZMZ 40522

T714C K082 60 65 75 80 K090 40 — **alternative T017B**

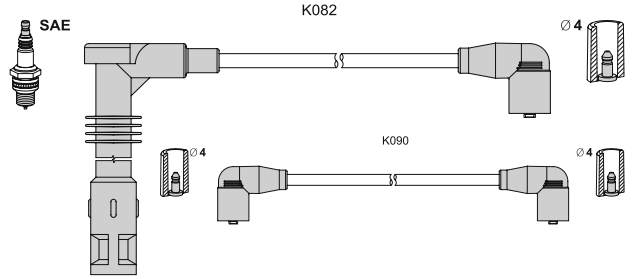

Seat Toledo I (1L) 1.8 16V	05.91 - 03.99	98	KR
VW Golf II 1.8 GTI 16V	02.86 - 10.91	95	PL
1.8 GTI 16V	02.86 - 06.90	102	KR
Jetta II (19E, 1G2) 1.8 16V	08.86 - 10.91	95	PL
1.8 16V	06.87 - 12.89	102	KR
Passat (3A2, 35I) 1.8 16V	04.88 - 12.89	100	KR
2.0 16V	08.88 - 09.93	100	9A
Passat Variant 1.8 16V	04.88 - 12.89	100	KR
2.0 16V	08.88 - 09.93	100	9A
Scirocco (53B) 1.8 16V	03.86 - 07.92	95	PL
1.8 16V	10.85 - 07.89	102	KR

T715C K084 45 55 60 75 85 90 K100 80 — **alternative T027B**

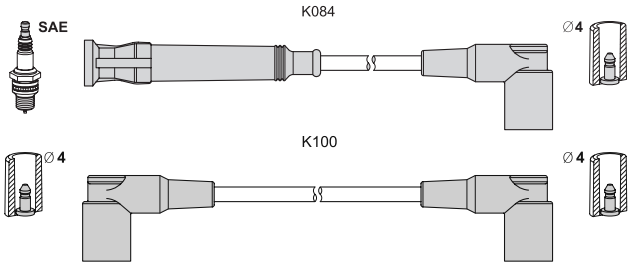

application → T173C

T716C K085 95 90 80 65 55 50 K092 40 — **alternative T030B**

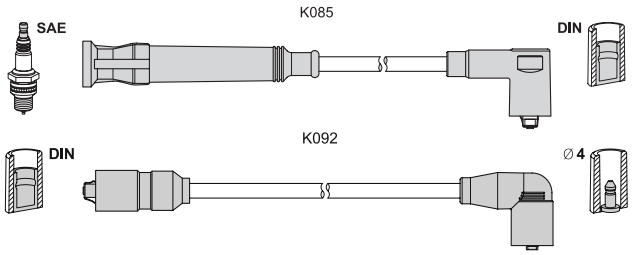

BMW 525 i (E28) 2.5	06.81 - 12.87	110	M20 B25E
528 i (E28) 2.8	06.81 - 12.87	135	M30 B28
628 CSi (E24) 2.8	09.79 - 08.87	135	M30 B28
728 i (E23) 2.8	07.78 - 08.86	135	M30 B28

T717C K083 85 95 105 110 125 130 K090 75 — **alternative T023B**

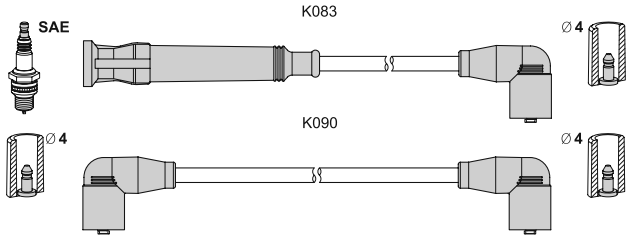

BMW 320/6 (E21) 2.0	09.77 - 08.82	90	M20 B20
323 i (E21) 2.3	01.78 - 08.82	105	M20 B23
320 i (E30) 2.0	09.82 - 12.85	92	M20 B20
323 i (E30) 2.3	09.82 - 08.83	102	M20 B23

T 717C ▶

< T717C			
BMW 323 i (E30) 2.3	09.83 - 08.86	110	M20 B23
520 i (E28) 2.0	06.81 - 12.87	92	M20 B20

T718C K086 50 55 60 75 85 90 K093 75 — alternative T031B

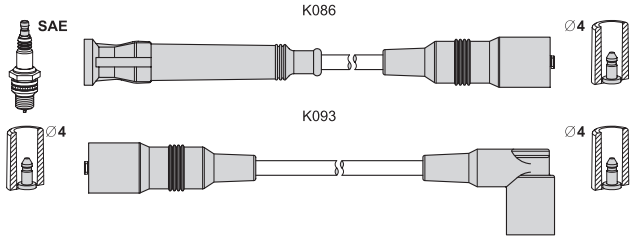

application → T174C

T719B K489 26 36 45 56 K300 80 — original T719C

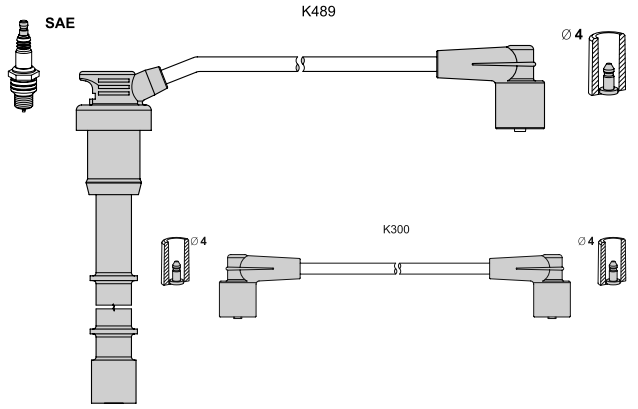

application → T719C

T719C K402 26 36 45 56 K100 80 — alternative T719B

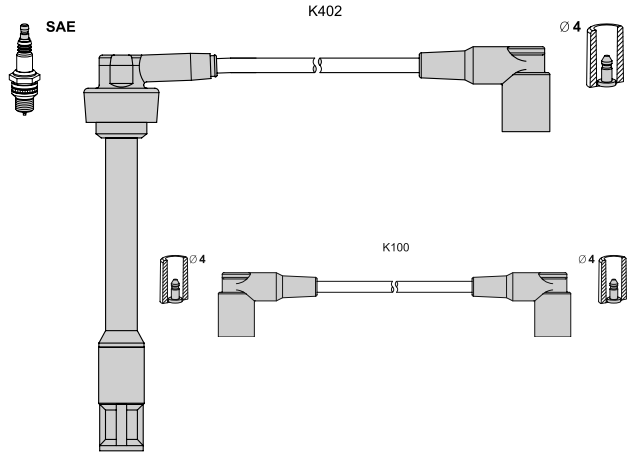

BMW 3 (E30) M3 2.3	07.86 - 06.91	143	S14 B23
M3 2.3	02.87 - 05.89	147	S14 B23
M3 2.3	06.89 - 06.91	158	S14 B23
M3 EVO I 2.3	10.88 - 10.90	162	S14 B23 (EVO I)
M3 EVO II 2.5	01.90 - 01.92	175	S14 B25 (EVO II)
3 Cabrio (E30) M3 2.3	06.88 - 06.91	143	S14 B23

T720B K489 26 29 44 52 67 K489.1 72 (sensor) K300 80 — original T720C

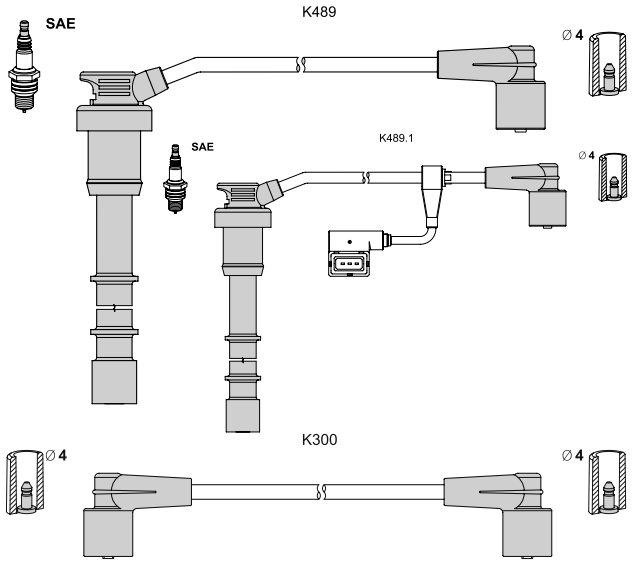

application → T720C

T720C K402 26 29 44 52 67 K402.1 72 (sensor) K100 80 — alternative T720B

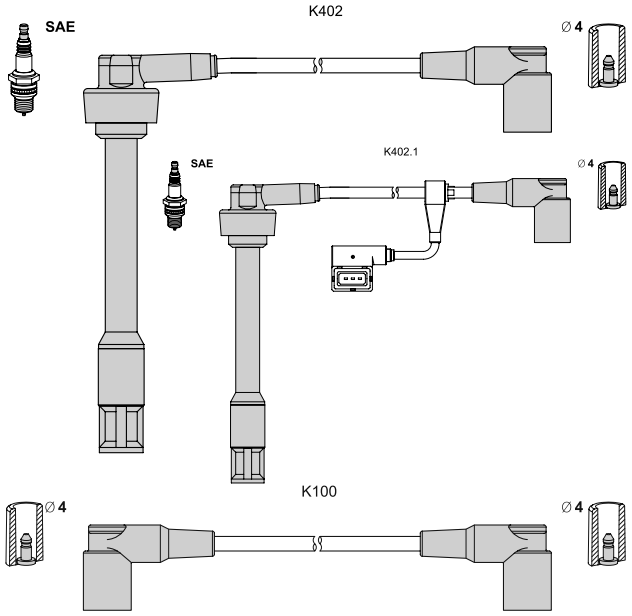

BMW M5 (E34) 3.6	10.88 - 05.92	232	S38 B36
3.6 cat	10.88 - 05.92	232	S38 B36
M 635 CSi (E24) 3.5	03.84 - 05.89	211	S38 B35

T721B K105 65 65 85 85 K061 50

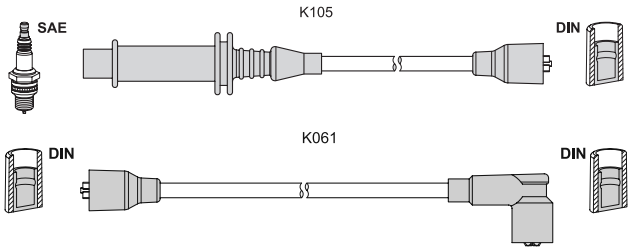

Citroen BX 14 (XB-_) 1.4 E	10.82 - 06.88	45	150A
1.4 E	09.85 - 02.93	49	150F
1.4 E	04.83 - 07.89	52	150C/K1G
1.4 E	04.83 - 02.93	53	150C
BX 14 Break (XB-_) 1.4	01.87 - 01.92	52	150C

< T721B

Citroen C15 (VD-_) 1.1	10.84 - 12.96	35	109K/E1A
Visa 1.0	09.84 - 06.88	33	XV8
Visa 11 1.1 E	09.78 - 06.88	35	109K
1.1 E	07.82 - 03.91	37	109/5F
1.1 E	09.78 - 03.91	42	109/5
Visa 14 1.4	07.84 - 03.91	44	150D (XY7)
1.4 GT	03.82 - 03.91	58	150B (XY8)
1.4 GT	03.82 - 03.87	55	150B (XY8)

T722B K501 60 55 40 30 -

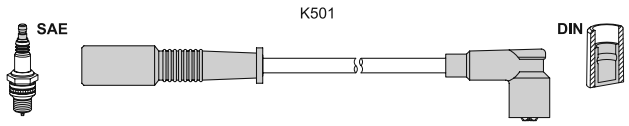

Fiat Cinquecento 1.1 Sporting	10.94 - 01.98	40	176 B2.000
Palio (178BX) 1.2	06.98 -	54	178 B5._ /176 A8._
Palio Weekend 1.2	04.96 - 02.01	54	178 B5.000
Panda 1100 (141A_) 1.1	05.91 - 12.99	37	156 C.046
1.1	02.95 - 09.03	40	187A1.000/176 B2._
1.1 4x4	02.95 - 07.04	40	176 B2.000
1.1 Trekking 4x4	10.91 - 07.04	37	156 C.046
Punto 55 (176) 1.1	09.93 - 09.99	40	176A6.000/_B2.000
Punto 60 (176) 1.2	01.94 - 09.99	43	176 A7.000
1.2	03.94 - 09.99	44	176B1.000/_ B4.000
Punto 60 Cabriolet 1.2	04.94 - 06.00	43	176 A7.000
1.2	05.95 - 06.00	44	176B1.000/_ B4.000
Punto 75 (176) 1.2	10.93 - 09.99	54	176 A8.000
Punto 85 (176) 1.2 16V	04.97 - 09.99	63	176 B9.000
Punto 85 Cabrio 1.2 16V	04.97 - 06.00	63	176 B9.000
Punto Van (176L) 1.1	04.96 - 02.00	40	176 B2.000
Siena (178_) 1.2	09.98 -	54	178 B5.000
Strada (178E) 1.2	06.99 -	54	178 B5.000
Lancia Y (840A) 1.1	11.95 - 09.03	40	176 B2.000
1.2	03.96 - 09.03	44	840 A3.000

T723B K187 70 60 50 45 K062 30

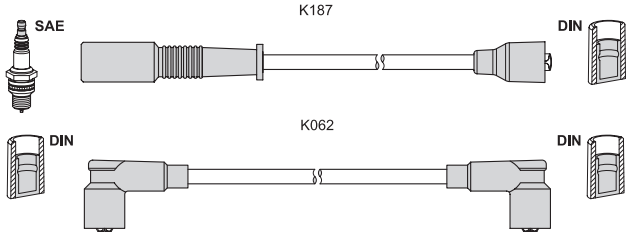

Fiat Tempra (159) 1.8 i.e.	03.92 - 08.96	77	159 A4.046
2.0 i.e.	10.90 - 08.96	83	159 A6.046
Tempra S.W. 1.8 i.e.	03.92 - 12.93	77	159 A4.046
2.0 i.e.	01.91 - 03.95	83	159 A6.046
2.0 i.e. 4x4	03.92 - 03.95	83	159 A6.046
Tipo (160) 1.8 i.e.	10.90 - 06.93	77	159 A4.046
2.0 i.e.	06.90 - 03.92	80	159 A5.046
2.0 i.e.	03.90 - 04.95	83	159 A6.046
Lancia Dedra (835) 1.8 i.e.	09.89 - 06.94	80	835 A2.000
1.8 i.e.	08.93 - 07.99	66	835 C5.000
2.0 HF Integrale	11.90 - 07.94	124	835 A7.046
2.0 i.e.	09.89 - 07.92	86	835 A5.000
2.0 i.e.	09.89 - 07.99	83	835 A5.046
2.0 i.e. Turbo	04.91 - 07.99	119	835 A8.046
2.0 i.e. T Integrale	05.90 - 07.94	121	835 A7.000

T724B K012 40 60 70 80 K061 60

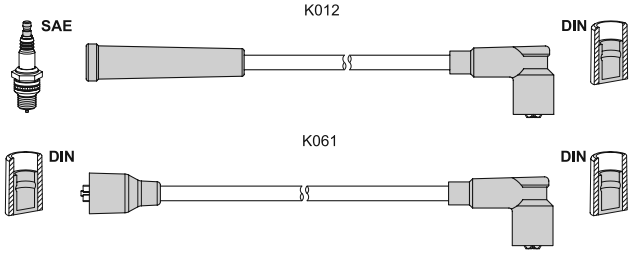

Citroen 25 Bus 1.8 E	07.87 - 02.94	51	169 (XM7T)
Fiat Ducato Flatbed 2.0	07.85 - 08.90	55	170 B
Ducato Panorama 1.8	07.82 - 12.88	51	
2.0	01.86 - 08.90	55	170 B
2.0	07.82 - 05.85	58	XN 1T
Ducato Van (280) 1.8	01.82 - 10.88	49	169 B
2.0	07.85 - 08.90	55	170 B
2.0	01.82 - 08.90	58	XN 1T

T726G K113 45 40 30 15 -

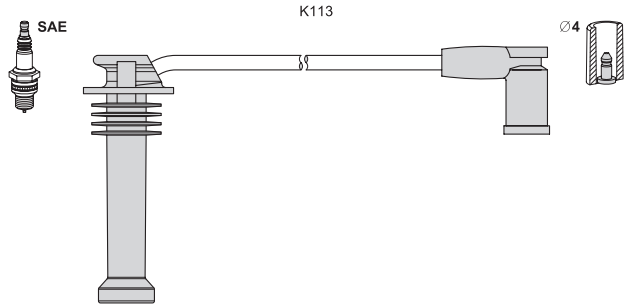

Ford Cougar (EC_) 2.0 16V	08.98 - 12.01	96	EDBB/_BC/_BD/_BA
Fiesta 1.4 i 16V	05.98 - 01.02	66	FHE/FHA
Focus (DAW, DBW) 1.8 16V	10.98 - 11.04	85	EYDD/_DC/_DE/_DL
2.0 16V	10.98 - 11.04	96	EDDC/_DB/_DD/_DF
2.0 RS	10.02 - 11.04	158	HMDA
ST170 2.0	03.02 - 11.04	127	ALDA
Focus Combi (DNW) 1.8 16V	02.99 - 11.04	85	EYDD/_DC/_DE/_DL
2.0 16V	02.99 - 11.04	96	EDDC/_DB/_DD/_DF
ST170 2.0	08.02 - 11.04	127	ALDA
Focus Sedan (DFW) 1.8 16V	02.99 - 11.04	85	EYDD/_DC/_DE/_DL
2.0 16V	02.99 - 11.04	96	EDDC/_DB/_DD/_DF
Maverick 2.0 16V	02.01 -	91	YF
Mondeo II (BAP) 1.6 i	09.98 - 11.00	66	L1J
1.6 i 16V	05.98 - 11.00	70	L1N/L1L/L1Q
1.8 i	09.98 - 11.00	85	RKK/_J/_B/_F/RKH
2.0 i	09.98 - 11.00	96	NGA/_B/_D/_C
Mondeo II Combi 1.6 i	09.98 - 11.00	66	L1J
1.6 i 16V	05.98 - 11.00	70	L1N/L1L/L1Q
1.8 i	09.98 - 11.00	85	RKK/_J/_B/_F/RKH
2.0 i	09.98 - 11.00	96	NGA/_B/_D/_C
Mondeo II Sedan 1.6 i	09.98 - 11.00	66	L1J
1.6 i 16V	05.98 - 11.00	70	L1N/L1L/L1Q
1.8 i	09.98 - 11.00	85	RKK/_J/_B/_F/RKH
2.0 i	09.98 - 11.00	96	NGA/_B/_D/_C
Puma (EC_) 1.6 16V	08.00 - 06.02	76	L1W
Tourneo Connect 1.8 16V	06.02 -	85	EYPC/EYPA/EYPD
Transit Connect 1.8 16V	06.02 -	85	EYPC/EYPA/EYPD
Mazda 121 III 1.25 i 16V	05.98 - 04.03	55	DHG/DHF
Tribute (EP) 2.0	03.00 - 05.08	91	YF
2.0 4WD	03.00 - 05.08	91	YF

T 728B ▶

T728B K059 45 55 60 70 K070 30

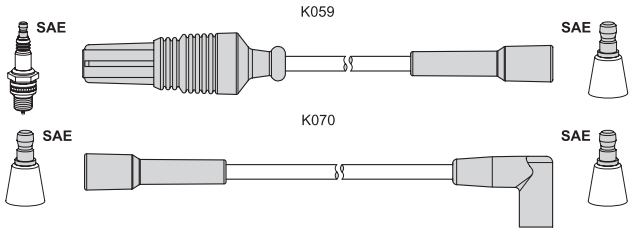

Citroen AX 10 (ZA-_) 1.0	09.86 - 06.92	32	C1A
1.0	07.86 - 12.91	33	CDY (TU9M)
1.0 E	12.86 - 12.88	30	C3A
AX 11 (ZA-_) 1.1	12.86 - 04.94	40	H1A/H1B
1.1 cat	09.86 - 04.92	44	HDZ (TU1M)
1.1 4x4	06.91 - 07.92	40	H1A
1.1	09.88 - 12.89	40	HAZ (TU1CP)
AX 14 (ZA-_) 1.4	12.86 - 12.88	44	KAY (TU3CP)
1.4	06.88 - 12.89	49	K1F
1.4	04.87 - 01.93	55	KDY (TU3FM)/KDY
1.4	01.88 - 12.92	62	K2B/K2A
1.4 4x4	08.91 - 01.93	55	KDY (TU3FM)/KDY
AX (ZA-_) 1.3 Sport	04.87 - 12.88	70	M4A
1.4 4x4	09.86 - 07.92	62	K2A
BX 11 (XB-_) 1.1	10.86 - 06.92	42	H1A
BX 14 (XB-_) 1.4	01.89 - 02.93	55	KDZ (TU3M/Z)/KDY
BX 14 Break (XB-_) 1.4	01.86 - 02.93	53	150C
1.4	01.89 - 02.93	55	KDY (TU3M)
C15 (VD-_) 1.0	10.84 - 12.97	33	XV8/TU9
1.0 E	11.92 - 07.96	37	TU9K
1.1	10.84 - 12.96	35	109K/E1A
1.1	11.88 - 07.96	40	H1A
1.1	10.84 - 07.87	40	
1.1 i	07.88 - 12.96	44	HDZ (TU1M)
1.4	07.87 - 12.96	49	K1H (TU3A)
1.4 E	05.87 - 12.96	44	150D (XY7)
1.4 E	07.87 - 12.96	40	K3A
1.4 i	05.91 - 12.96	55	KDY (TU3FM)/KDY
C15 Combi 1.1	08.88 - 07.96	44	HDZ (TU1M)
1.4	05.91 - 07.96	55	KDY (TU3M)
ZX (N2) 1.1	03.91 - 08.93	40	H1A/H1B
1.1	03.91 - 06.97	44	HDZ (TU1M)
1.4	03.91 - 06.97	55	KDZ (TU3M/Z)
1.4 i	03.91 - 06.97	55	KDZ / KFX / KDX
ZX Break (N2) 1.4 i	10.93 - 10.97	55	KFX / KDX / KDY
Peugeot 106 I (1A, 1C) 1.0	09.91 - 04.96	33	TU9/CDY (TU9M)
1.1	09.91 - 04.96	44	HDZ (TU1M)
1.4	08.91 - 03.96	51	K5A (TU3)
1.4	09.91 - 06.93	55	KDY (TU3M)
205 I Cabriolet 1.1 CJ	10.89 - 12.94	44	HDZ (TU1M)
1.4	08.87 - 06.94	62	K2B (TU3S)
1.4 CJ	03.88 - 05.89	44	150D (XY7)/150G
1.4 CJ	03.89 - 12.94	49	K1D (TU3A)
1.4 CJ	05.91 - 12.94	55	KDZ (TU3M)/KDY
1.4 CJ cat	01.89 - 09.93	44	KAY (TU3CP)
205 II (20A/C) 1.0	10.87 - 09.98	33	TU9
1.1	10.87 - 10.90	40	H1B (TU1)
1.1	07.89 - 09.98	44	HDZ (TU1M)
1.3 Rallye	10.87 - 10.90	74	TU24
1.4	10.87 - 05.89	44	150D (XY7)/150G
1.4	10.87 - 10.90	49	K1D (TU3A)
1.4	07.88 - 09.98	55	KFX / KDZ / KDY
1.4	06.87 - 12.89	62	K2B (TU3S)
1.4 cat	08.87 - 09.93	44	KAY (TU3CP)
309 I (10C, 10A) 1.4	03.89 - 07.89	49	K1D (TU3A)
1.4	03.89 - 07.89	55	KDZ (TU3M)/KDY
1.4	03.89 - 07.89	62	K2B (TU3S)

< T728B

Peugeot 309 I (10C, 10A) 1.6	11.85 - 09.88	76	180Z (XU5J)/B6B
309 II (3C, 3A) 1.1	08.90 - 12.93	44	HDZ (TU1M)
1.4	07.89 - 12.93	55	KDZ (TU3M)/KDY
1.4	07.90 - 12.93	49	K1D (TU3A)

T730B K027 50 50 60 70 K072 60

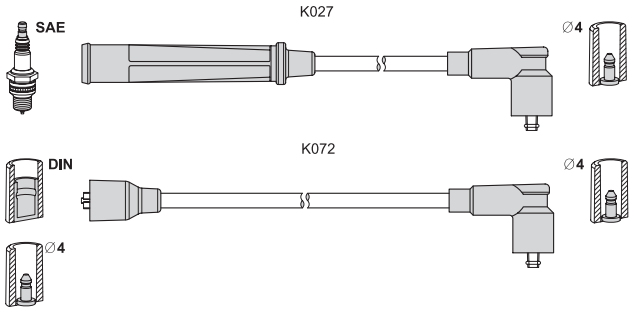

application → T649C (original)

T731B K026 30 40 50 60 K065 60

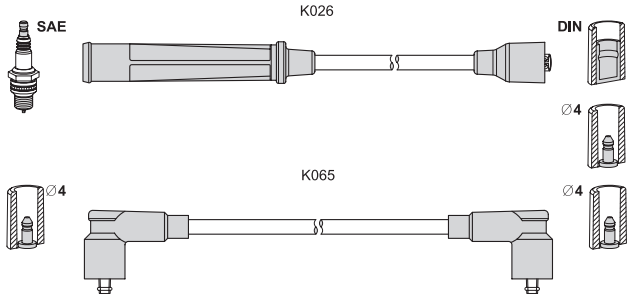

application → T650C (original)

T732B K028 50 60 65 70 K061 60

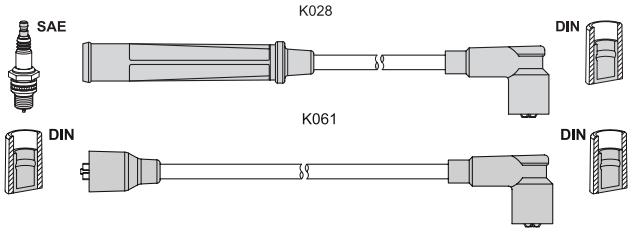

Seat Ibiza I (021A) 1.7	01.91 - 05.93	72	021 A.3000
1.7	01.91 - 05.93	76	021 B.3000
VW Derby (86) 0.9	02.77 - 09.81	29	HA
1.1	02.77 - 09.81	37	HB
1.3	02.77 - 09.81	43	HJ
1.3	02.77 - 09.81	44	HH
Derby (86C, 80) 1.1	10.81 - 07.83	37	HB
1.3	08.83 - 12.84	37	HW
1.3	08.83 - 12.84	40	HK
1.3	08.81 - 07.83	44	HH
1.3	09.82 - 12.84	55	GK
Golf I (17) 1.1	04.74 - 07.83	37	GG/FA
1.3	08.82 - 12.83	43	GS
1.3	08.79 - 07.83	44	GF
Golf I Cabriolet (155) 1.3	08.83 - 07.86	40	HK
Jetta I (16) 1.1	08.78 - 02.84	37	GG/FA
1.3	08.82 - 02.84	43	GS
1.3	08.79 - 02.84	44	GF
Passat (32B) 1.3	08.80 - 07.83	40	FY
1.3	08.80 - 07.86	44	FZ
Passat Variant 1.3	08.80 - 07.83	40	FY
1.3	08.80 - 07.86	44	FZ

< T732B

VW Polo (86) 1.1	03.75 - 09.81	37	HB
1.3	12.76 - 09.81	44	HH

T733H K140 45 25 25 25 -

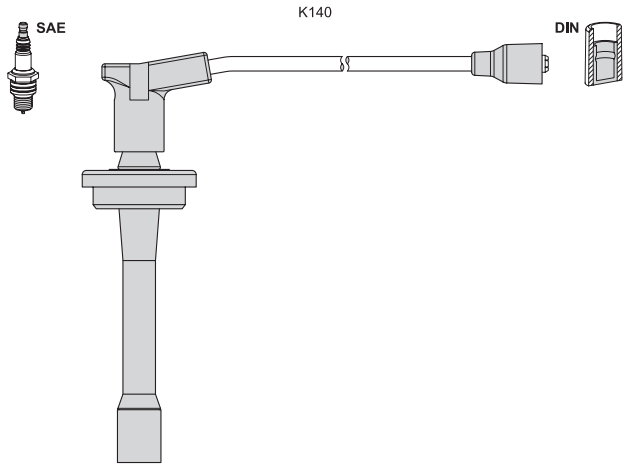

application → T804S

T734B K027 60 60 60 60 K065 60

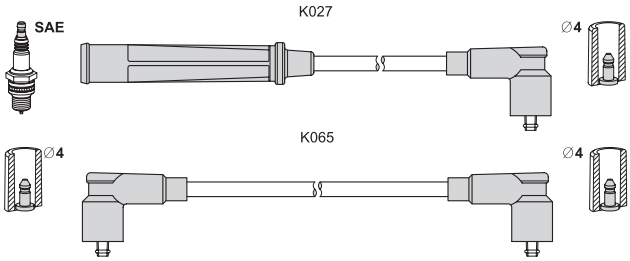

application → T657C (original)

T735B K132 65 55 45 40 K078 40

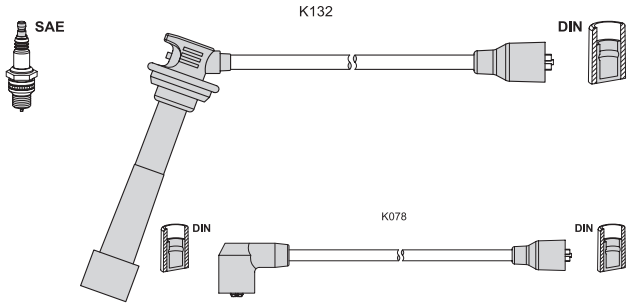

Suzuki Baleno (EG) 1.3	09.96 - 01.99	52	G13BA
1.3 i 16V	07.95 - 01.99	63	G13BB
1.6 i 16V	07.95 - 01.99	72	G16B
1.6 i 16V 4x4	07.95 - 01.99	72	G16B
Baleno CC (EG) 1.3	09.96 - 05.02	52	G13BA
1.3 i 16V	07.95 - 01.99	63	G13BB
1.6 i 16V	07.95 - 01.99	72	G16B
1.6 i 16V 4x4	07.95 - 01.99	72	G16B
Baleno Combi 1.3 16V	03.97 - 01.99	63	G13BB
1.6 i 16V	08.96 - 01.99	72	G16B
1.6 i 16V 4x4	08.96 - 01.99	72	G16B
Swift II Sedan 1.6	11.89 - 12.91	70	G16B
1.6 4WD	11.89 - 12.91	70	G16B
1.6 i	01.90 - 05.01	68	G16B
1.6 i 4WD	01.90 - 05.01	68	G16B

T736B K033 70 60 50 K013-40 K070 45

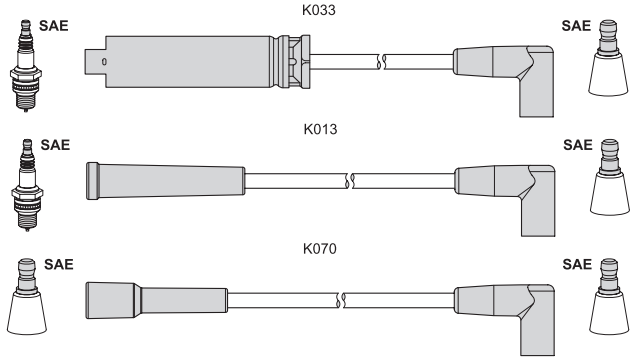

Daewoo Cielo (KLETN) 1.5	02.95 - 08.97	52	G15MF
1.5	02.95 - 08.97	55	G15MF
1.5	08.96 - 08.97	44	G15MF
Cielo sedan (KLETN) 1.5	02.95 - 08.97	52	G15MF
1.5	02.95 - 08.97	55	G15MF
1.5	08.96 - 08.97	44	G15MF
Nexia (KLETN) 1.5	08.96 - 08.97	44	G15MF
1.5	02.95 - 08.97	52	G15MF
1.5	02.95 - 08.97	55	G15MF
Nexia sedan (KLETN) 1.5	08.96 - 08.97	44	G15MF
1.5	02.95 - 08.97	52	G15MF
1.5	02.95 - 08.97	55	G15MF

T737B K033 90 80 70 60 K070 50

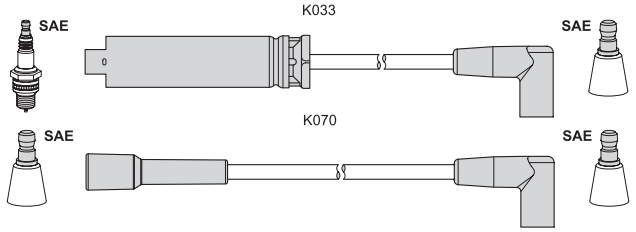

Daewoo Aranos 1.8	01.95 - 11.97	70	Y18L
2.0	01.95 - 11.97	77	C20LE
Espero (KLEJ) 1.8	02.95 - 09.99	66	C18LE
1.8	02.95 - 06.99	70	C18LE
2.0	02.95 - 06.99	77	C20LE
2.0	10.91 - 09.93	74	C20LZ
2.0	10.93 - 09.94	81	C20LE
Nubira (KLAJ) 1.8	04.97 - 05.99	70	C18LE
Nubira Sedan (KLAJ) 1.8	04.97 - 05.99	70	C18LE
Nubira Wagon (KLAJ) 1.8	04.97 - 05.99	70	C18LE

T738B K032 50 45 40 K311-35 -

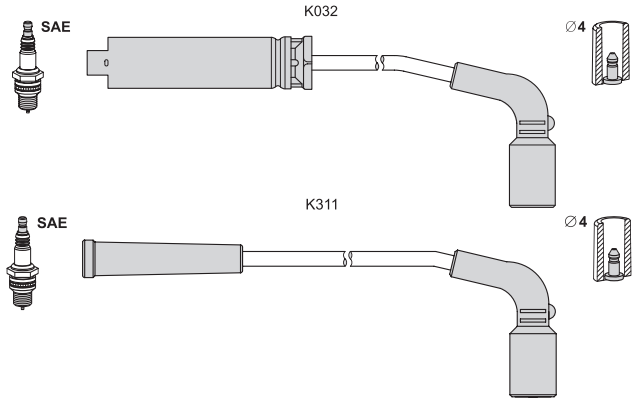

Chevrolet Aveo Sedan (T250) 1.5	05.05 -	62	F15S3
Kalos 1.4	03.05 -	61	F14S3

T 738B ▶

< T738B			
Chevrolet Kalos Sedan 1.4	03.05 -	61	F14S3
Lanos Sedan 1.5	11.05 -	63	A15SMS
Daewoo Kalos (KLAS) 1.4	09.02 -	61	F14S3
Kalos Sedan 1.4	11.02 - 12.04	61	F14S3
Lanos (KLAT) 1.3	05.97 -	55	A13SMS
1.5	05.97 -	63	A15SMS
Lanos Sedan (KLAT) 1.3	05.97 -	55	A13SMS
1.5	05.97 -	63	A15SMS
Nexia Sedan 1.5	07.08 -	59	Y15L
Nexia 1.5 (UzDaewoo)	07.97 - 07.08	55	SOHC
Nexia New 1.5 (UzDaewoo)	03.08 -	59	SOHC
ZAZ Chance 1.5 i	07.09 -	63	A15SMS
Lanos Hatchback 1.3 i	01.98 - 01.09	55	A13SMS
1.5 i	01.98 -	63	A15SMS
1.5 i 16V	01.99 - 07.04	74	A15DMS
Lanos Sedan 1.3 i	01.98 - 01.09	55	A13SMS
1.5 i	01.98 -	63	A15SMS
1.5 i 16V	01.99 - 07.04	74	A15DMS
Lanos Pick Up 1.3 i	01.05 -	55	A13SMS
1.5 i	01.05 -	63	A15SMS
Vida 1.5 i	01.12 -	62	F15S3
Vida hatchback 1.5 i	01.12 -	62	F15S3

T739C K447 43 44 45 37 - alternative T097B

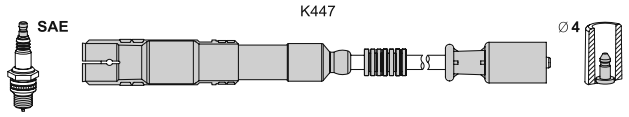

Mercedes A 150 (W169) 1.5	09.04 - 06.12	70	M 266.920
A 160 (W169) 1.5	04.09 - 06.12	70	M 266.920
A 170 (W169) 1.7	09.04 - 06.12	85	M 266.940
A 180 (W169) 1.7	04.09 - 06.12	85	M 266.940
A 200 (W169) 2.0	09.04 - 06.12	100	M 266.960
A 200 Turbo (W169) 2.0	09.05 - 06.12	142	M 266.980
B 150 (W245) 1.5	03.05 - 11.11	70	M 266.920
B 160 (W245) 1.5	04.09 - 11.11	70	M 266.920
B 170 (W245) 1.7	03.05 - 11.11	85	M 266.940
B 180 (W245) 1.7	04.09 - 11.11	85	M 266.940
B 200 (W245) 2.0	03.05 - 11.11	100	M 266.960
B 200 Turbo (W245) 2.0	03.05 - 11.11	142	M 266.980

T740C K574 70 85 85 100 K444 55 alternative T069B

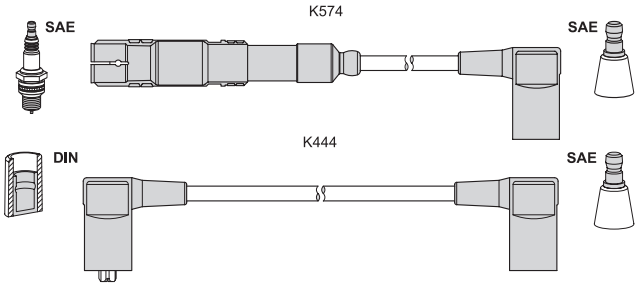

Mercedes 190 (W201) 2.0	10.82 - 10.84	66	M 102.921
2.0	01.86 - 05.90	75	M 102.924
2.0	09.84 - 05.90	77	M 102.924
190 E (W201) 1.8	04.90 - 08.93	80	M 102.910
2.0	02.85 - 12.86	83	M 102.961/_.962
2.0	02.85 - 12.86	85	M 102.962
2.0	01.85 - 08.93	87	M 102.962
2.0	10.82 - 06.93	90	M 102.961/_.962
2.3	09.86 - 08.91	97	M 102.985
2.3	10.86 - 08.93	100	M 102.985
200 (W123) 2.0	06.80 - 11.85	74	M 102.939
2.0	06.80 - 11.85	80	M 102.920

< T740C			
Mercedes 200 (W124) 2.0	01.86 - 05.90	75	M 102.922
2.0	01.86 - 05.90	77	M 102.922
2.0	12.85 - 05.90	80	M 102.922
200 E (W124) 2.0	09.88 - 08.92	87	M 102.963
2.0	09.88 - 12.89	90	M 102.963
200 T (S123) 2.0	11.80 - 11.85	74	M 102.939
2.0	11.80 - 11.85	80	M 102.920
200 T (S124) 2.0	01.86 - 05.90	77	M 102.922
2.0	09.85 - 08.89	80	M 102.922
200 TE (S124) 2.0	09.88 - 08.92	87	M 102.963
2.0	09.88 - 12.89	90	M 102.962
230 E (W123) 2.3	04.80 - 12.85	100	M 102.980
230 E (W124) 2.3	12.84 - 03.92	97	M 102.982
2.3	01.85 - 06.93	100	M 102.982
2.3 cat	06.89 - 06.93	97	M 102.982
230 CE (C124) 2.3	03.87 - 12.92	97	M 102.982
2.3	03.87 - 12.92	100	M 102.982
2.3 cat	06.89 - 12.92	97	M 102.982
230 TE (S123) 2.3	04.80 - 11.85	100	M 102.980
230 TE (S124) 2.3	09.85 - 08.92	97	M 102.982
2.3	09.85 - 08.92	100	M 102.982
2.3 cat	06.89 - 08.92	97	M 102.982
G 230 GE (W460) 2.3	05.87 - 08.92	90	M 102.979/_.987
2.3	04.82 - 08.92	92	M 102.987/.981/.989
G 230 GE (W461) 2.3	02.93 -	90	M 102.979
2.3	06.93 -	92	M 102.996/_.997
G 230 GE (W463) 2.3	06.90 - 06.93	93	M 102.989
G 230 GE Cabrio 2.3	06.90 - 02.93	93	M 102.989

T741C K574 40 50 65 65 80 95 K444 100 alternative T070B

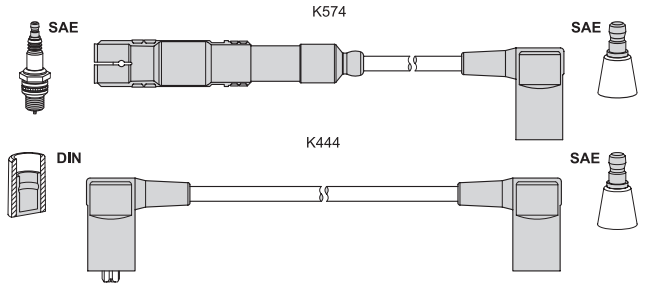

Mercedes 190 (W201) 2.6	10.82 - 09.88	118	M 103.942
190 E (W201) 2.6	09.86 - 08.93	118	M 103.942
2.6	09.86 - 12.89	122	M 103.942
260 TE (S124) 2.6	09.89 - 08.92	118	M 103.940
2.6	09.85 - 12.89	122	M 103.940
260 E (W124) 2.6	09.85 - 08.92	118	M 103.940
2.6	09.85 - 12.89	122	M 103.940
260 E 4-matic (W124) 2.6	09.86 - 08.92	118	M 103.943
2.6	12.86 - 12.89	122	M 103.940
300 CE (C124) 3.0	03.87 - 05.93	132	M 103.983
3.0	03.87 - 12.89	138	M 103.983
300 TE (S124) 3.0	01.86 - 08.92	132	M 103.983
3.0	01.86 - 12.89	138	M 103.983
300 TE 4-matic ((S124) 3.0	09.86 - 06.93	132	M 103.985
3.0	09.86 - 12.89	138	M 103.983
300 E (W124) 3.0	01.85 - 12.85	138	M 103.980
3.0	06.85 - 08.92	138	M 103.983
3.0	08.85 - 08.92	132	M 103.983
300 E 4-matic (W124) 3.0	09.86 - 02.92	138	M 103.983
3.0	09.86 - 06.93	132	M 103.985
E 300 4-matic (W124) 3.0	06.93 - 06.95	132	M 103.985
E 300 T 4-matic (S124) 3.0	06.93 - 06.96	132	M 103.985
G 300 GE (W463) 3.0	06.90 -	125	M 103.987
3.0	06.90 -	128	M 103.987
G 300 GE Cabrio 3.0	09.89 - 09.97	125	M 103.987

< T741C

Mercedes S 260 SE (W126) 2.6	09.85 - 06.91	118	M 103.941
2.6	09.85 - 06.91	122	M 103.941
S 300 SE,SEL (W126) 3.0	01.86 - 06.91	132	M 103.981
3.0	09.85 - 12.89	138	M 103.981
300 SL (R107) 3.0	09.85 - 08.89	132	M 103.982
3.0	09.85 - 08.89	138	M 103.982
300 SL (R129) 3.0	03.89 - 08.93	140	M 103.984

T742C K380 60 65 78 80 95 105 K386 45

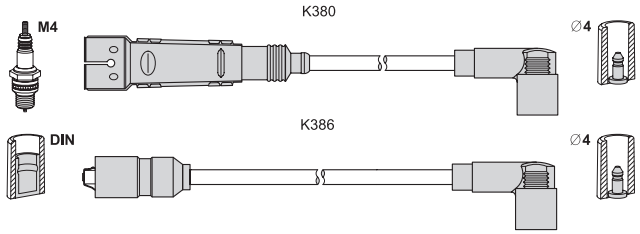

Mercedes 280 (W123) 2.8	02.76 - 08.81	115	M 110.923
280 E (S123) 2.8	02.76 - 11.85	136	M 110.988/_.984
280 (W123) 2.8 TE	09.77 - 11.85	136	M 110.988
280 S (W116) 2.8	08.72 - 07.80	115	M 110.922
280 SE,SEL (W116) 2.8	08.72 - 07.80	136	M 110.985
280 S (W126) 2.8	12.79 - 07.85	115	M 110.926/_.924
280 SE,SEL (W126) 2.8	10.79 - 07.85	136	M 110.987/_.989
280 SL (R107) 2.8	08.74 - 07.85	136	M 110.986/.990/.982

T743C K417 35 35 + + -

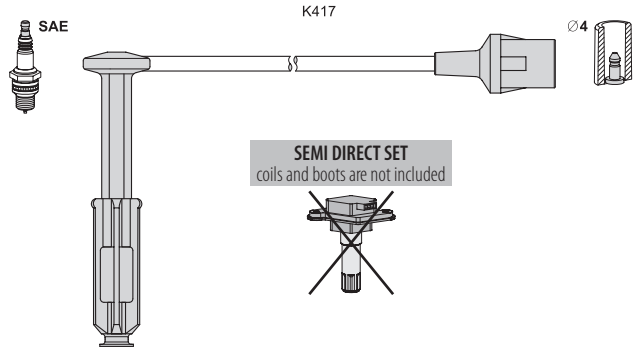

Daewoo Korando (KJ) 2.3	01.99 -	105	M 161.970
Korando Cabrio 2.0 16V	02.99 -	94	M 161.950
2.3	02.99 -	105	M 161.970
Musso (FJ) 2.3	01.99 -	103	M 111.970
Mercedes E 200 Kompr. 2.0	06.97 - 03.02	137	M 111.947
E 200 T Kompr. (S210) 2.0	06.97 - 03.03	137	M 111.947
ML 230 (W163) 2.3	02.98 - 06.05	110	M 111.977
SLK 200 Kompr. (R170) 2.0	03.00 - 04.04	120	M 111.958
Sprinter 214 NGT Bus 2.3	04.00 - 05.06	92	M 111.984
Sprinter 214 NGT Flatb. 2.3	04.00 - 05.06	92	M 111.984
Sprinter 214 NGT Van 2.3	04.00 - 05.06	92	M 111.984
Sprinter 314 NGT Bus 2.3	04.00 - 05.06	92	M 111.984
Sprinter 314 NGT Flatb. 2.3	04.00 - 05.06	92	M 111.984
Sprinter 314 NGT Van 2.3	04.00 - 05.06	92	M 111.984
Ssang Yong Korando (KJ) 2.0	05.97 -	94	
2.3	05.97 -	103	M 111.970
2.3	01.99 -	105	
Korando Cabrio (KJ) 2.3	11.97 -	103	
2.3	02.99 -	105	
Musso (FJ) 2.0	10.96 -	93	E20
2.3	10.96 -	103	M 111.970
2.3	04.03 -	110	
Tagaz Road Partner 2.3 4x4	01.08 - 01.14	110	M161 (E23)
Tager 2.3	10.08 - 01.14	110	M161 (E23)

T744G K045 80 70 55 45 -

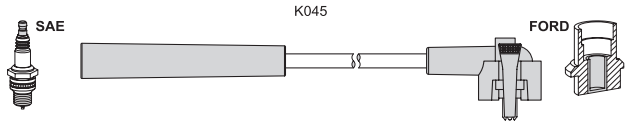

Ford Escort '91 Express 1.4	07.90 - 12.94	52	F6F/F6G
Escort '95 Express 1.4	01.95 -	54	F4B
Escort V (GAL) 1.4	07.90 - 09.92	52	F6F/F6G
1.6	07.90 - 08.92	66	LUJ/LUK
Escort V Cabrio (ALL) 1.4	07.90 - 12.92	52	F6F/F6G
Escort V Combi 1.4	07.90 - 09.92	52	F6F/F6G
1.6	07.90 - 08.92	66	LUJ/LUK
Escort VI (GAL) 1.4	09.92 - 01.95	52	F6F/F6G
1.4	01.94 - 01.95	55	F4B/FUH
1.8 16V XR3i	09.92 - 01.95	96	RQB
Escort VI Cabrio (ALL) 1.4	12.92 - 04.94	52	F6F/F6G
1.4 i	07.93 - 01.95	55	F4B
Escort VI Combi (GAL) 1.4	01.94 - 01.95	55	F4B/FUH
1.4	09.92 - 01.94	52	F6F/F6G
Escort VI Sedan (GAL) 1.4	08.93 - 04.94	52	F6F/F6G
1.4	08.93 - 01.95	55	F4B/FUH
Escort VII 1.4	01.95 - 10.98	55	F4B
Escort VII Cabriolet 1.4	02.95 - 08.98	55	F4B
Escort VII Combi 1.4	01.95 - 02.99	55	F4B/FUH
Escort VII Sedan 1.4	01.95 - 02.99	55	F4B/FUH
Fiesta III (GFJ) 1.4	03.89 - 12.95	52	F6E
1.4	03.89 - 12.95	54	FUG/FUJ
1.4 cat	03.89 - 12.95	54	F4A
1.6	01.89 - 01.94	65	LUH
Fiesta Van (F3L, F5L) 1.3	09.91 - 02.96	44	J6B
Orion III (GAL) 1.4	07.90 - 12.93	52	F6F/F6G
1.4	07.90 - 12.93	54	FUH
1.6	07.90 - 12.92	66	LUJ/LUK

T745B K456 21 K457 39 + + -

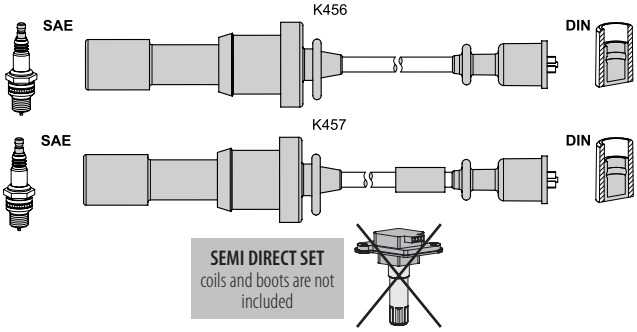

Hyundai H-1 / Starex 2.4	08.01 - 04.04	82	G4CS
2.4	06.01 - 04.04	99	G4JS
2.4 4WD	08.01 - 04.04	82	G4CS
Santa Fé I (SM) 2.0	08.01 - 03.06	99	G4BP
2.4 16V	02.01 - 03.06	100	G4JS-G
2.4 16V	02.01 - 03.06	107	G4JS-G
2.4 16V 4x4	02.01 - 03.06	100	G4JS-G
2.4 16V 4x4	02.01 - 03.06	107	G4JS-G
Sonata IV (EF) 2.0 16V	06.98 - 10.01	100	G4JP-G
2.0 16V	10.01 - 11.04	96	G4JP-EG
2.4 16V	03.98 - 10.01	105	G4BS
Trajet (FO) 2.0	02.04 - 07.08	100	G4JP-G
2.0	02.04 - 07.08	103	G4GC-G
Tucson (JM) 2.0	08.04 - 03.10	104	G4GC
2.0 Allrad	08.04 - 03.10	104	G4GC
Kia Magentis (GD) 2.0	05.01 -	100	G4JP
Sorento I (JC) 2.4	08.02 -	102	G4JS
Sportage (JE) 2.0 16V 4WD	09.04 -	104	G4GC
2.0 i 16V	09.04 -	104	G4GC

T 745B ▶

< T745B			
Mitsubishi Santamo 2.0 16V	01.03 - 12.04	102	4G63 (DOHC 16V)
2.0 16V 4WD	01.03 - 12.04	102	4G63 (DOHC 16V)

T746P K156 60 50 40 30 -

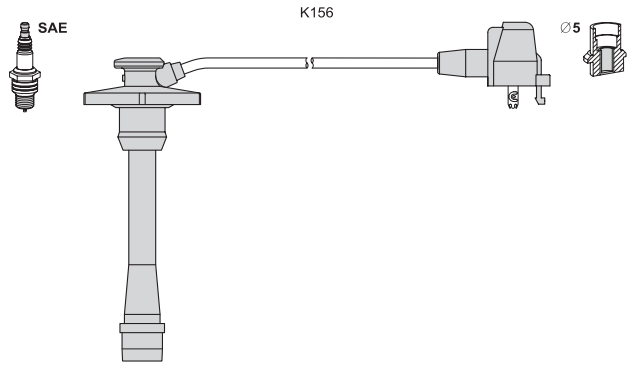

Toyota Avensis (_T22_) 1.6	09.97 - 10.00	74	4A-FE
1.6	09.97 - 10.00	81	4A-FE
Avensis Liftback 1.6	09.97 - 10.00	74	4A-FE
1.6	09.97 - 10.00	81	4A-FE
Avensis Stat. Wagon 1.6	09.97 - 10.00	74	4A-FE
1.6	09.97 - 10.00	81	4A-FE
Carina E (_T19_) 1.6	12.93 - 09.97	73	4A-FE
1.6	12.93 - 09.97	85	4A-FE
1.6 16V	10.95 - 09.97	78	4A-FE
1.6 GLI	04.92 - 09.97	79	4A-FE
Carina E Sedan 1.6	01.95 - 09.97	73	4A-FE
1.6	01.93 - 09.97	79	4A-FE
1.6	10.95 - 09.97	78	4A-FE
1.6	12.94 - 09.97	85	4A-FE
Carina E Sportswag. 1.6	04.92 - 09.97	85	4A-FE
1.6 GLI	01.93 - 09.97	79	4A-FE
1.6 i	02.95 - 09.97	73	4A-FE
Celica (_T20_) 1.8 i 16V	11.93 - 11.99	85	7A-FE
Corolla (_E10_) 1.6 Si	09.95 - 04.97	84	4A-FE
Corolla (_E11_) 1.6	04.97 - 02.00	81	4A-FE
1.6 Aut.	04.97 - 02.00	79	4A-FE
Corolla Comp. (E10) 1.6 Si	07.92 - 04.97	84	4A-FE
1.8 GT	11.92 - 05.95	86	7A-FE
1.8 GTi 4WD	05.92 - 07.95	92	7A-FE
Corolla Compact (E11) 1.6	04.97 - 02.00	81	4A-FE
1.6 Aut.	04.97 - 02.00	79	4A-FE
Corolla Liftb. (E10) 1.6 GLI	07.92 - 04.97	84	4A-FE
1.8 GT	11.92 - 05.95	86	7A-FE
1.8 GTi 4WD	05.92 - 07.95	92	7A-FE
Corolla Liftback (E11_) 1.6	04.97 - 02.00	81	4A-FE
1.6 Aut.	04.97 - 02.00	79	4A-FE
Corolla Wagon (E10) 1.6 Si	07.92 - 04.97	84	4A-FE
1.8 16V 4WD	09.95 - 04.97	81	7A-FE
Corolla Wagon (E11_) 1.6	04.97 - 02.00	81	4A-FE
1.6 Aut.	04.97 - 02.00	79	4A-FE

T747B K217 30 35 40 55 -

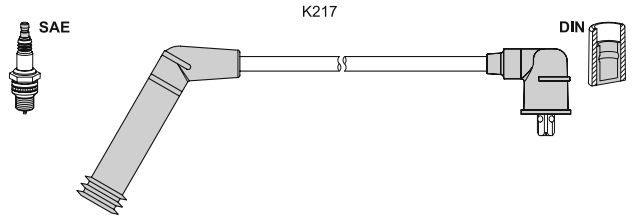

Hyundai Accent I (X-3) 1.3	10.94 - 01.00	44	G4EH
1.3	10.94 - 01.00	55	G4EH

< T747B			
Hyundai Accent I (X-3) 1.3 i 12V	10.94 - 01.00	62	G4EH
1.5 i 12V	10.94 - 01.00	65	G4EK SOHC
Accent II (LC) 1.3	01.00 - 11.05	55	G4EA
1.3	01.00 - 11.05	61	G4EA
1.3	01.00 - 11.05	63	G4EA
1.3	08.02 - 11.05	62	G4EH
1.5	01.00 - 11.05	66	G4EB
Accent Sedan (X-3) 1.3	10.94 - 01.00	44	G4EH
1.3	10.94 - 01.00	55	G4EH
1.3 i 12V	10.94 - 01.00	62	G4EH
1.5 i 12V	10.94 - 01.00	65	G4EK SOHC
Accent Sedan (LC) 1.3	01.00 - 11.05	55	G4EA
1.3	01.00 - 11.05	63	G4EA
1.5	01.00 - 11.05	66	G4EB
Atos (MX) 1.1	08.03 - 05.05	43	G4HD
1.1	03.04 -	46	G4HG
Atos Prime (MX) 1.0 i	04.03 -	43	G4HC-E
1.1	06.03 -	43	G4HD
1.1	09.05 -	46	G4HG
Getz (TB) 1.1	09.05 - 06.09	49	G4HD
1.3	09.03 - 09.05	63	G4EA
1.3 i	09.02 - 03.04	60	G4EA
Lantra II (J-2) 1.5 12V	12.96 - 09.00	65	G4EK
Lantra II Wagon 1.5 12V	04.97 - 10.00	65	G4EK
Kia Picanto (BA) 1.0	09.05 -	45	G4HE
1.1	04.04 -	48	G4HG

T752B K368 38 54 54 66 K071 67

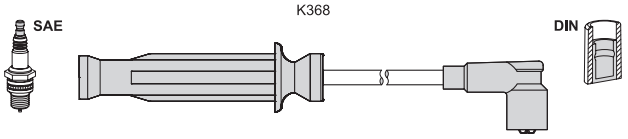

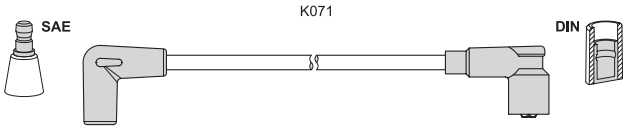

Rover 200 Coupe 220 Turbo	10.92 - 06.99	147	20 T4G
200 Hatchback (XW) 220GTi	01.93 - 10.95	100	20 T4H
220 GTi	09.91 - 10.95	103	20 M4F
220 Turbo	01.93 - 10.95	147	20 T4G

T756G K340 45 60 70 80 K061 45

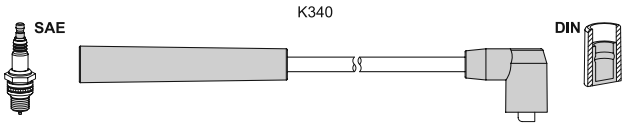

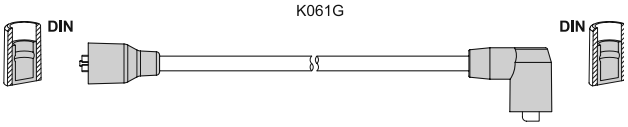

Ford Probe I 2.2	08.88 - 07.93	82	
Probe I 2.2 GT	08.88 - 12.92	108	

T757C K083 60 55 50 35 - alternative T897B

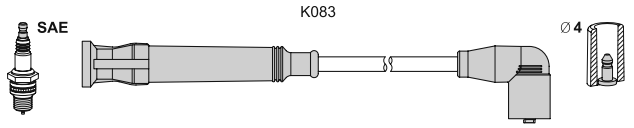

Fiat Brava (182) 1.4	10.95 - 10.01	55	182 A5.000
1.4 12 V	10.95 - 08.98	59	182 A3.000
Bravo (182) 1.4	10.95 - 10.01	55	182 A5.000
1.4 12 V	10.95 - 10.01	59	182 A3.000
Marea (185) 1.4 12V	09.96 - 05.02	59	182 A3.000
Marea Weekend 1.4 12V	09.96 - 05.02	59	182 A3.000
Lancia Y (840A) 1.4 12 V	03.96 - 09.03	55	840 A4.000
1.4 12 V	10.96 - 09.03	59	840 A2.000

T760B K568 39 46 61 69 -

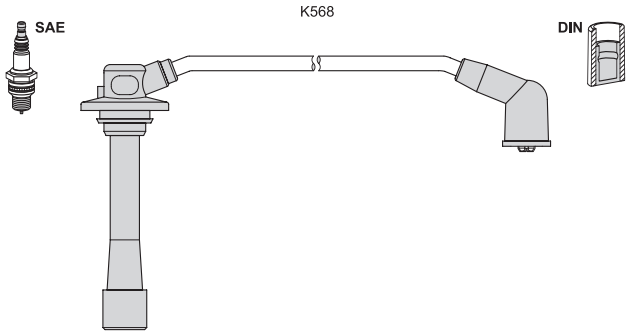

Mazda 626 IV (GE) 1.8 i	01.92 - 04.97	77	FP
1.8 i	08.94 - 04.97	66	
2.0 i	01.92 - 04.97	85	FS
2.0 i 4WD	04.92 - 04.97	85	FS
626 IV Hatchback (GE) 1.8	08.91 - 04.97	77	FP
1.8	08.94 - 04.97	66	
2.0 i	08.91 - 04.97	85	FS
2.0 i 4WD	04.92 - 04.97	85	FS
MX-6 (GE6) 2.0	02.92 - 02.97	85	FS

T762B K010 60 60 70 70 K061 90

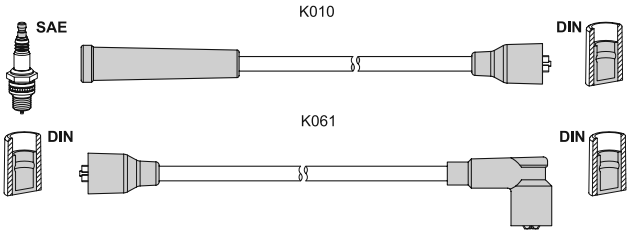

Opel/Vauxhall Corsa A CC 1.0	09.82 - 03.93	33	10 S
1.2	09.82 - 08.90	33	E 12 GV/12 NC
Corsa A TR 1.0	09.82 - 09.92	33	10 S
1.2 N	01.85 - 10.87	33	E 12 GV/12 NC
Corsa A Van 1.0	02.86 - 04.89	33	10 S
1.2	02.86 - 04.89	33	E 12 GV/12 NC
Kadett D 1.2	08.79 - 07.82	39	12 N
Kadett D Caravan 1.2	08.79 - 07.82	39	12 N
Kadett E 1.2	09.84 - 07.86	40	12 SC
Kadett E Caravan 1.2	09.84 - 07.86	40	12 SC
Kadett E CC 1.2	09.84 - 07.86	40	12 SC
Kadett E Van 1.2	09.84 - 07.86	40	12 SC

T763B K013 70 60 50 50 K068 50

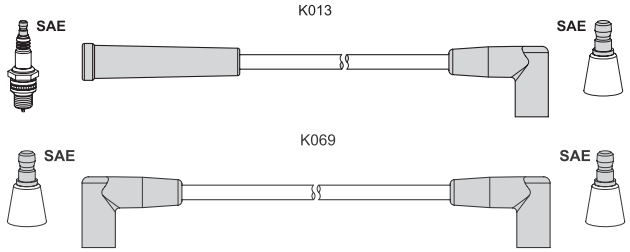

Opel/Vauxhall Corsa A CC 1.2	09.82 - 08.90	44	12 S
1.2 N	01.90 - 03.93	38	12 NV
1.2 S	09.82 - 02.90	40	12 ST
1.3	09.85 - 10.89	44	13 NB
1.3 GL	09.82 - 03.93	55	13 S
1.3 i	09.86 - 09.90	44	C 13 N
1.3 S	09.82 - 10.89	51	13 SB
Corsa A TR 1.0	09.82 - 09.92	33	10 S
1.2 S	09.82 - 03.93	40	12 ST
1.2 S	09.82 - 10.87	43	12 S
1.3	09.85 - 10.87	44	13 NB/C 13 N
1.3 GL	09.82 - 03.93	55	13 S
1.3 S	09.82 - 10.87	51	13 SB
Corsa A Van 1.0	02.86 - 04.89	33	10 S
1.2	02.86 - 04.89	40	12 ST
1.2	02.86 - 07.90	44	12 S
1.3	02.86 - 04.89	44	13 NB
1.3	02.86 - 04.89	51	13 SB

T764B K037 85 75 65 K010-50 K061 50

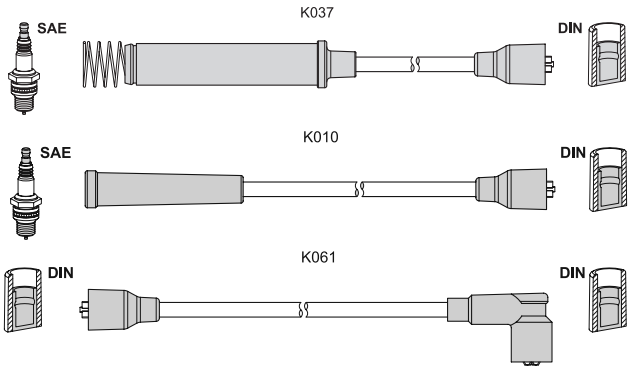

Opel Ascona C 1.8 E	01.85 - 08.86	74	C 18 NE
1.8 i	09.82 - 08.86	85	18 E
Ascona C CC 1.8 E	01.85 - 08.86	74	C 18 NE
1.8 i	09.82 - 08.86	85	18 E
Kadett D 1.8 GT/E	02.83 - 08.84	85	18 E
Kadett E 1.8	09.87 - 08.90	84	18 E
1.8 i	10.85 - 08.86	74	C 18 NE
1.8 i	09.84 - 08.86	85	18 SE/18 E
Kadett E Caravan 1.8 E	10.85 - 08.86	74	C 18 NE
1.8 i	09.84 - 08.86	85	18 E
Kadett E CC 1.8 E	10.85 - 08.86	74	C 18 NE
1.8 GSI	09.84 - 08.86	85	18 E

T 765B ▶

T765B K038 65 60 45 35 K066 40

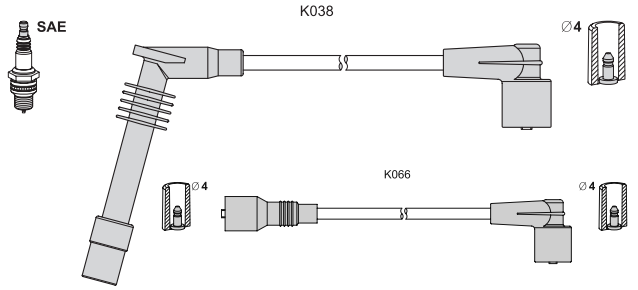

Opel/Vauxhall Astra F 1.4	09.91 - 09.93	55	14 NV
1.4	05.93 - 09.98	60	14 SE
1.4 i	09.91 - 09.98	44	C 14 NZ/X 14 NZ
1.4 Si	05.93 - 09.98	60	C 14 SE
Astra F Cabriolet 1.4 Si	05.93 - 03.01	60	C 14 SE
Astra F Caravan 1.4	09.91 - 09.93	55	14 NV
1.4	05.93 - 09.98	60	14 SE
1.4 i	09.91 - 01.98	44	C 14 NZ
1.4 Si	05.93 - 01.98	60	C 14 SE
Astra F CC 1.4	09.91 - 09.93	55	14 NV
1.4	05.93 - 01.98	60	14 SE
1.4 i	03.92 - 01.98	44	C 14 NZ
1.4 Si	05.93 - 01.98	60	C 14 SE
Astra F Clas. Caravan 1.4 i	01.98 - 01.05	44	X 14 NZ
Astra F Classic CC 1.4 i	01.98 - 08.02	44	X 14 NZ
Astra F Classic Sedan 1.4 i	01.98 - 08.02	44	X 14 NZ
Corsa B 1.2 i	03.93 - 09.00	33	C 12 NZ
1.2 i	03.93 - 09.00	33	12 NZ
1.4 i	03.93 - 09.00	44	C 14 NZ

T766B K035 60 45 40 25 -

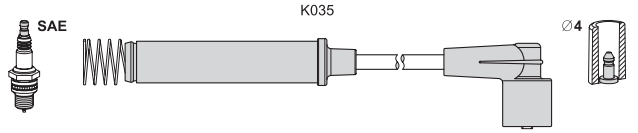

Opel/Vauxhall Astra F 1.4	11.94 - 09.98	60	14 SE
1.4 Si	11.94 - 09.98	60	C 14 SE
1.6 Si	05.92 - 12.94	74	C 16 SE
Astra F Cabrio 1.4 Si	11.94 - 03.01	60	C 14 SE
Astra F Caravan 1.4	11.94 - 09.98	60	14 SE
1.4 Si	11.94 - 01.98	60	C 14 SE
1.6 Si	03.92 - 12.94	74	C 16 SE
Astra F CC 1.4	11.94 - 01.98	60	14 SE
1.4 Si	11.94 - 01.98	60	C 14 SE
1.6 Si	03.92 - 12.94	74	C 16 SE
Corsa A CC 1.6 GSI	09.89 - 03.93	72	C 16 SEI
1.6 GSI cat	02.92 - 03.93	74	C 16 SE

T767B K022 60 45 40 50 -

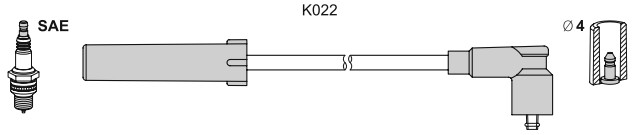

Renault Clio I 1.2	01.96 - 09.98	40	D7F 730
1.2	01.96 - 09.98	43	D7F 730
Clio II 1.2	09.98 - 10.99	43	D7F766/720/764/726
Clio II Van (SB0/1/2_) 1.2	09.98 - 10.99	43	D7F720/726/D7F 746
Kangoo (KC0/1_) 1.2	08.97 - 10.99	43	D7F710/744/722/720
Kangoo Express 1.2	08.97 - 10.99	43	D7F710/744/722/720
1.2	07.98 - 07.01	44	D7F 766/D7F 764
Twingo (C06_) 1.2	05.96 - 10.98	40	D7F 700/D7F 701

< T767B

Renault Twingo (C06_) 1.2	05.96 - 10.98	43	D7F 700/D7F 701
Twingo Van (S06_) 1.2	05.96 -	43	D7F 706/D7F 701

T768B K010 90 80 60 60 40 40 K060 40

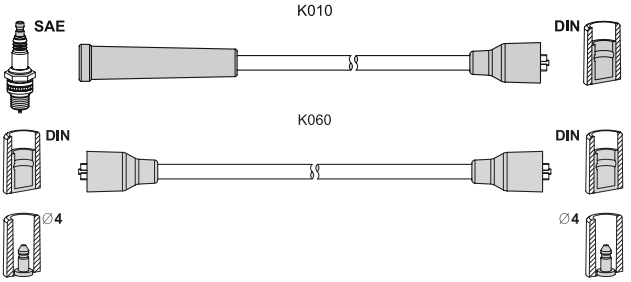

Opel/Vauxhall Omega A 3.0	03.87 - 09.90	130	30 NE
3.0 cat	03.88 - 03.94	130	C 30 NE
Omega A Caravan 3.0	03.87 - 03.94	115	C 30 LE
3.0	03.87 - 09.90	130	30 NE
3.0 cat	03.87 - 03.94	130	C 30 NE

T769B K010 35 45 60 65 80 90 K060 50

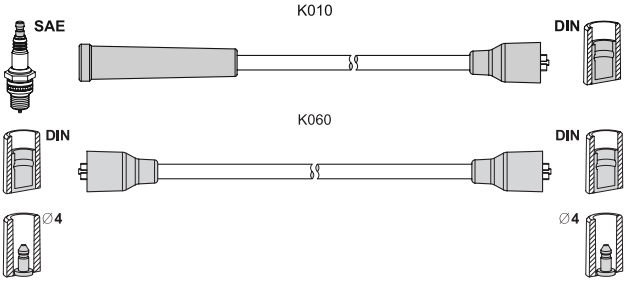

Opel Commodore C 2.5 S	12.80 - 12.82	85	25 S
2.5 E	12.80 - 12.82	96	25 E
Monza A (22_) 2.5 E	05.81 - 08.86	100	H 25 E
2.5 E	06.84 - 08.86	103	25 E
2.8	02.78 - 04.81	103	28 H
3.0	04.78 - 07.82	110	30 H
3.0 GSE	09.85 - 08.86	115	C 30 LE
3.0 GSE	02.78 - 08.86	132	30 E
Opel/Vauxhall Omega A 3.0	03.87 - 12.87	115	C 30 LE
3.0	03.87 - 09.90	130	30 NE
Omega A Caravan 3.0	03.87 - 09.90	130	30 NE
Senator A (29_) 2.5 E	01.83 - 08.84	100	H 25 E
2.8	02.78 - 04.81	103	28 H
3.0	04.78 - 07.82	110	30 H
3.0 E	02.78 - 12.86	132	30 E

T770B K038 81 71 68 61 -

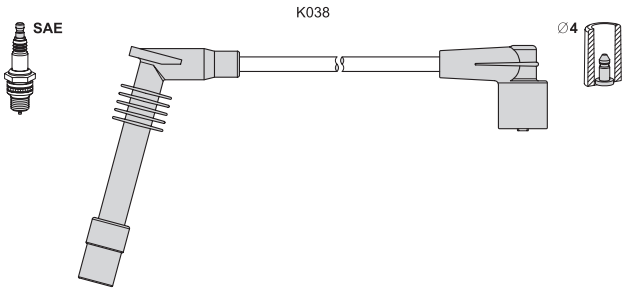

Opel Frontera A Sport 2.0 i	03.92 - 10.98	85	X 20 SE

T771H K023 45 40 40 50 -

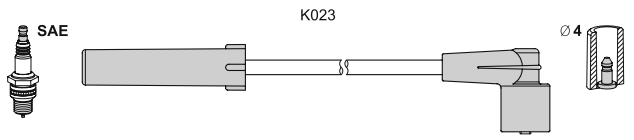

application → T867S

T772B K576 24 28 32 33 -

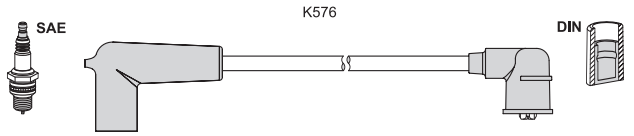

Mazda RX 8 (SE17) 2.6 Wankel	10.03 - 06.12	170	13B-MSP

T773G K114 40 35 20 15 -

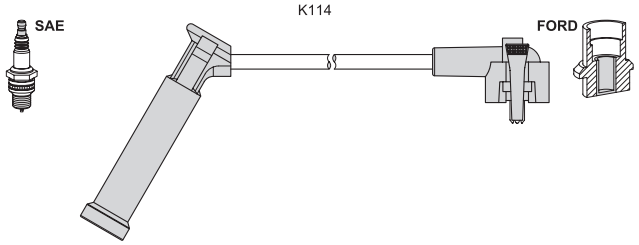

Ford Fiesta IV 1.25 i 16V	08.95 - 04.98	55	DHG/_B/_C/_E/_F
Puma (EC_) 1.4 16V	11.97 - 04.98	66	FHD
1.7 16V	03.97 - 04.98	92	MHB/MHA
1.7 ST 160	06.99 - 04.00	118	
Mazda 121 III 1.25	03.96 - 04.98	55	DHG/DHF

T774S K141 40 35 25 40 -

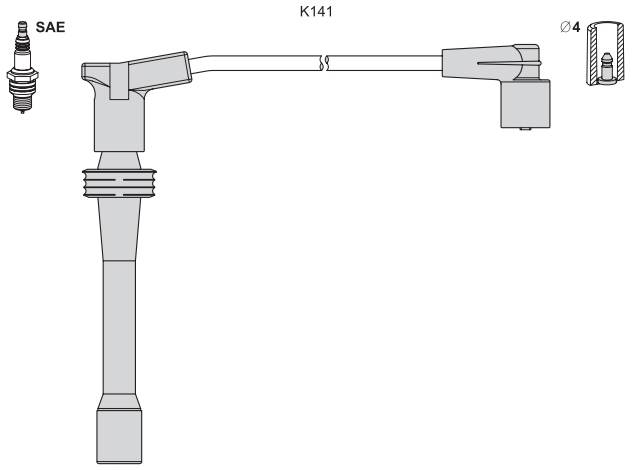

Lada 2110 Lada 110 1.5i 16V	06.95 - 10.07	66	VAZ 2112
2111 Lada 111 1.5i 16V	06.98 - 02.09	66	VAZ 2112
2112 Lada 112 1.5i 16V	06.99 - 02.09	66	VAZ 2112

T776B K152 60 55 45 40 -

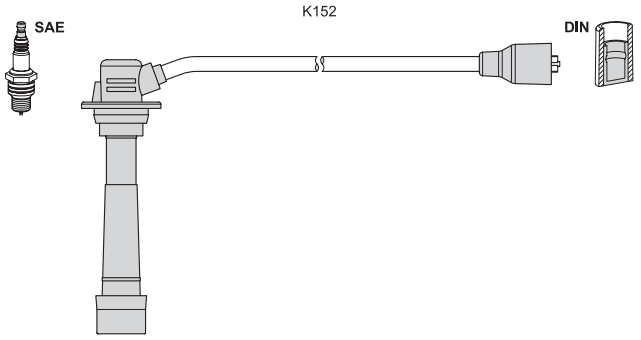

Ford Probe II (ECP) 2.0 16V	10.93 - 03.98	85	FS

T777C K116 50 35 25 20 - alternative T986B

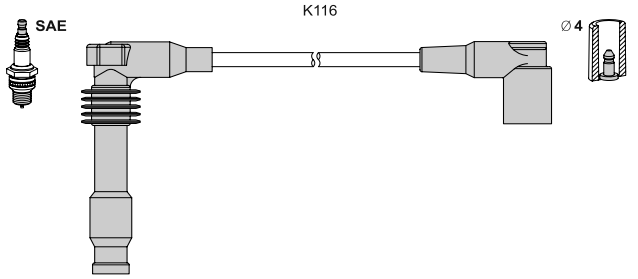

Chevrolet Captiva 2.4	06.06 -	100	Z 24 SED
2.4 4WD	06.06 -	100	Z 24 SED
2.4	12.06 -	103	Z 24 SED
2.4 4WD	12.06 -	103	Z 24 SED
2.4 LPG	01.07 -	100	Z 24 SED
2.4 LPG 4WD	01.07 -	100	Z 24 SED
Evanda 2.0	03.05 -	96	X 20 SED
Lacetti (J200) 1.8	03.05 -	90	T18SED
1.8	08.05 -	89	F18D3
Nubira Combi 1.8	03.05 -	90	T18SED
Nubira Sedan 1.8	03.05 -	90	T18SED
Rezzo 2.0	03.05 -	89	T20SED
2.0	08.05 -	90	T20SED
Tacuma 2.0	03.05 -	89	T20SED
2.0	08.05 -	90	T20SED
Daewoo Evanda (KLAL) 2.0	08.02 -	96	L88/X 20 SED
Lacetti CC (KLAN) 1.8	02.04 -	90	T18SED
Lacetti Sedan 1.8 CDX	08.03 - 12.04	90	T18SED
Leganza (KLAV) 2.0 16V	06.97 - 12.02	98	X 20 SED
2.0 16V	07.00 - 04.04	93	T20SED
2.2 16V	04.99 - 12.02	100	T22SED
Nubira (KLAJ) 2.0 16V	05.97 -	98	X 20 SED/Z20L
Nubira Sedan 2.0 16V	05.97 -	98	X 20 SED
2.0 16V	12.00 -	93	T20SED
Nubira Sedan (KLAN) 1.8	07.03 -	90	T18SED
Nubira Wagon 2.0 16V	05.97 -	98	X 20 SED
2.0 16V	12.00 -	93	T20SED
Nubira Wagon (KLAN) 1.8	07.03 -	90	T18SED
Rezzo (KLAU) 2.0	09.00 -	94	T20SED
2.0	09.01 -	89	X 20 SED
Tacuma (KLAU) 2.0	09.00 -	94	T20SED
2.0	09.01 -	89	X 20 SED
Opel Antara 2.4	05.06 -	104	Z 24 XED
Antara 2.4	09.08 -	103	Z 24 XE
Opel/Vauxhall Astra F 1.8 i 16V	06.93 - 10.94	92	C 18 XE
1.8 i 16V	11.94 - 09.98	85	C 18 XEL/X 18 XE
1.8 i 16V	09.95 - 08.97	85	C 18 SEL
2.0 i 16V	02.95 - 09.98	100	X 20 XEV
Astra F Cabrio 1.8 i 16V	11.94 - 03.01	85	C 18 XEL/X 18 XE

T 777C ▶

< T777C				
Opel/Vauxhall Astra F Caravan 1.8 i 16V	06.93 - 01.98	92	C 18 XE
1.8 i 16V	07.94 - 01.98	85	C 18 XEL/X 18 XE
2.0 i 16V	02.95 - 01.98	100	X 20 XEV
Astra F CC 1.8 i 16V	09.94 - 01.98	85	C 18 XEL/X 18 XE
1.8 i 16V	06.93 - 08.94	92	C 18 XE
2.0 i 16V	02.95 - 01.98	100	X 20 XEV
Astra F Classic CC 2.0 i	03.98 - 08.00	100	X 20 XEV
2.0 i	10.99 - 08.00	118	X 20 XER
Astra G Caravan 2.0 16V	02.98 - 07.04	100	X 20 XEV
Astra G CC 2.0 16V	02.98 - 01.05	100	X 20 XEV/C 20 SEL
2.0 16V OPC	11.99 - 09.02	118	X 20 XER
Astra G Sedan 2.0 16V	09.98 - 01.05	100	X 20 XEV
Calibra A (85_) 2.0 i 16V	06.90 - 02.94	110	C 20 XE
2.0 i 16V	02.94 - 07.97	100	X 20 XEV
2.0 i 16V 4x4	06.90 - 02.94	110	C 20 XE
2.0 i 16V 4x4	02.94 - 07.97	100	X 20 XEV
Omega B 2.0 16V	03.94 - 09.99	100	X 20 XEV
Omega B Caravan 2.0 16V	03.94 - 09.99	100	X 20 XEV
Sintra 2.2 i 16V	11.96 - 04.99	104	X 22 XE
Vectra A 2.0 i 16V	06.94 - 11.95	100	X 20 XEV
2.0 i 16V 4x4	06.94 - 11.95	100	X 20 XEV
Vectra A CC 2.0 i 16V	06.94 - 11.95	100	X 20 XEV
2.0 i 16V cat	02.90 - 11.95	110	C 20 XE
Vectra B (36_) 1.8 i 16V	10.95 - 09.00	85	X 18 XE1
1.8 i 16V	10.95 - 09.00	85	X 18 XE
2.0 i 16V	10.95 - 09.00	100	X 20 XEV/C 20 SEL
Vectra B Caravan 1.8 i 16V	11.96 - 09.00	85	X 18 XE1
1.8 i 16V	11.96 - 09.00	85	X 18 XE
2.0 i 16V	11.96 - 09.00	100	X 20 XEV/C 20 SEL
Vectra B CC (38_) 1.8 i 16V	10.95 - 09.00	85	X 18 XE1
1.8 i 16V	10.95 - 09.00	85	X 18 XE
2.0 i 16V	10.95 - 09.00	100	X 20 XEV/C 20 SEL
Zafira (F75_) 1.8 16V	04.99 - 09.00	85	X 18 XE1

T778C K116 65 60 55 40 - alternative T987B

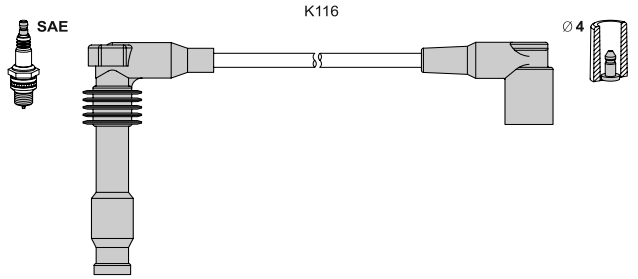

Opel/Vauxhall Astra F Clas. CC 1.4 i	03.98 - 08.00	66	X 14 XE
Corsa B (73_) 1.4 i 16V	09.94 - 09.00	67	X 14 XE
Tigra (95_) 1.4 16V	07.94 - 12.00	66	X 14 XE
1.4 16V	08.97 - 12.00	63	X 14 XE
1.6 16V	07.94 - 08.98	78	X 16 XE
1.6 16V	08.97 - 08.98	74	C 16 SEL

T779C K116 65 50 65 50 55 35 - alternative T989B

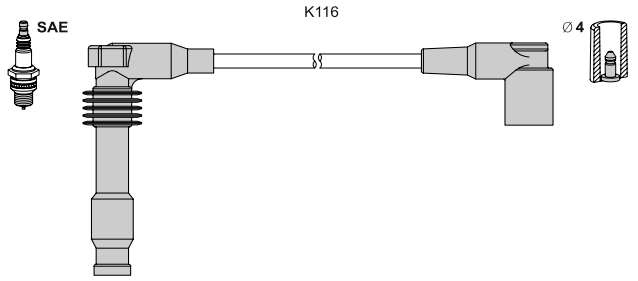

Saab 900 II 2.5 24V V6	07.93 - 02.98	125	B258I

< T779C			
Saab 900 II Cabriolet 2.5 24V V6	12.93 - 02.98	125	B258I
900 II Coupe 2.5 24V V6	12.93 - 02.98	125	B258I
9000 3.0 24V V6 CD/CDE	07.94 - 12.98	155	B308I
9000 CC 3.0 24V CS/CSE	07.94 - 12.98	155	B308I

T780C K116 80 65 55 45 - alternative T988B

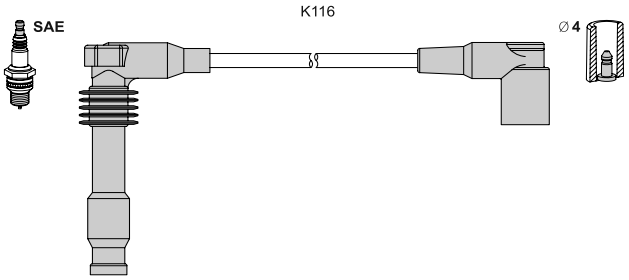

Opel/Vauxhall Frontera A 2.2 i	03.95 - 10.98	100	X 22 XE
Frontera B (6B_) 2.2 i	10.98 -	100	X 22 SE/Y 22 SE

T781C K325 30 35 35 40 - alternative T032B

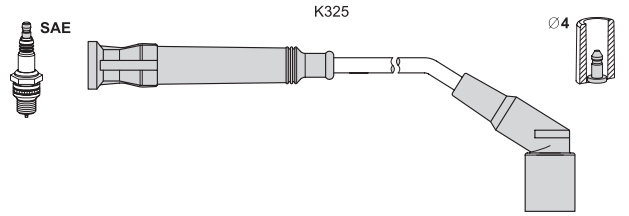

BMW 316 i (E36) 1.6	07.93 - 02.98	75	M43 B16
316 g Compact (E36) 1.6	12.95 - 08.00	75	M43 B16
316 i Compact (E36) 1.6	03.94 - 08.00	75	M43 B16
316 i Coupe (E36) 1.6	09.93 - 04.99	75	M43 B16
316 i Touring (E36) 1.6	01.96 - 10.99	75	M43 B16

T782C K142 105 95 90 75 -

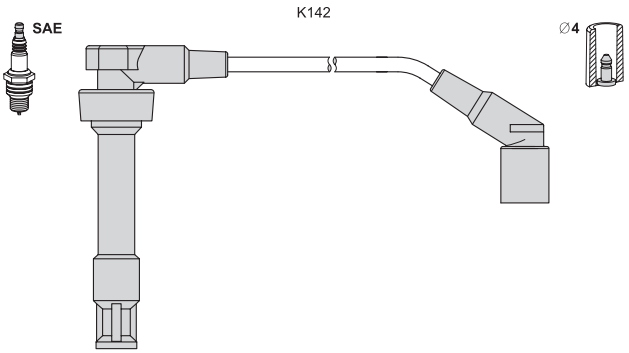

BMW 318 is (E36) 1.8	10.93 - 02.98	103	M42 B18
1.9	09.95 - 02.98	103	M44 B19
318 ti Compact (E36) 1.8	11.94 - 08.95	103	M42 B18
1.9	07.95 - 08.00	103	M44 B19
318 is Coupe (E36) 1.8	03.92 - 10.95	103	M42 B18
1.9	09.95 - 04.99	103	M44 B19
Z3 1.9	10.95 - 03.99	103	M44 B19

T784B K235 25 25 -

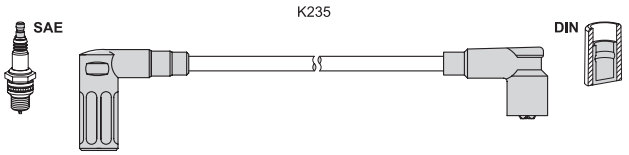

Fiat Cinquecento (170) 0.7	12.91 - 01.96	23	170 A.000
0.7 i	07.94 - 01.98	22	170 A.046

T785B K235 40 40 30 25 -

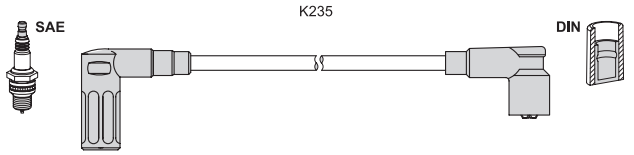

Fiat Cinquecento (170) 0.9	07.91 - 12.93	30	170 A1.000
0.9 i.e.	07.91 - 12.93	30	170 A1.046
0.9 i.e. S	07.91 - 07.99	29	1170A1.000/_ A1.046
Panda 900 (141A_) 0.9	04.92 - 12.96	29	1170 A1.046
Seicento (187) 0.9	01.98 - 01.10	29	1170 A1.046

T786B K057 35 45 60 65 K317 45

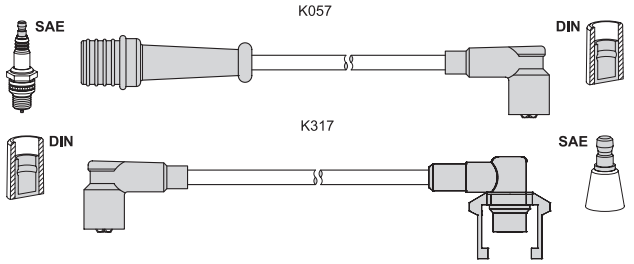

Renault 21 (B48_) 2.0	06.91 - 05.93	75	J6R793/759/758/792
2.2	09.89 - 06.94	79	J7T 754/J7T 755
2.2 4x4	07.90 - 06.94	79	J7T 754/J7T 755
21 Combi (K48_) 2.0	06.91 - 05.93	75	J6R759/J6R 758/792
2.0	03.86 - 12.93	88	J7R 747/J7R 746
2.0 4x4	03.89 - 12.93	88	J7R 747/J7R 746
2.2	06.86 - 11.93	79	J7T 754/J7T 755
2.2 4x4	06.86 - 12.93	79	J7T 754/J7T 755
21 Sedan (L48_) 2.0	03.86 - 10.93	75	J6R 759/J6R 758
2.0	03.86 - 12.93	88	J7R 747/J7R 746
2.2	07.86 - 02.94	79	J7T 754/J7T 755
2.2 4x4	07.90 - 02.94	79	J7T 754/J7T 755
25 (B29_) 2.0	03.87 - 12.93	88	J7R 723/J7R 722
2.2	11.85 - 03.89	76	
2.2	09.86 - 12.92	79	J7T708/J7T 733 /732
2.2	04.84 - 12.89	89	J7T 715
2.2	04.84 - 12.89	91	J7T 730/J7T 731

T787B K057 30 40 K040 55 65 K317 40

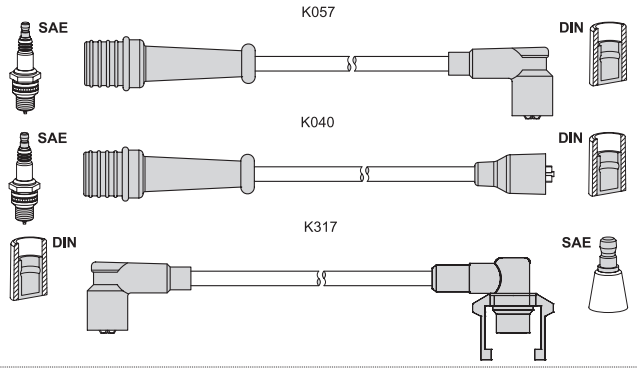

Renault Trafic Bus (TXW) 2.2	05.89 - 06.94	70	J7T 780
2.2	06.94 - 10.97	74	J7T 600
2.2 4x4	05.89 - 06.94	70	J7T 780
2.2 4x4	06.94 - 10.97	74	J7T 600
Trafic Flatbed (PXX) 2.2	05.89 - 06.94	70	J7T 780
2.2	09.94 - 04.98	74	J7T 600
2.2 4x4	09.94 - 04.98	74	J7T 600
Trafic Van (TXX) 2.2	05.89 - 06.94	70	J7T 780
2.2	06.94 - 10.97	74	J7T 600
2.2 4x4	05.89 - 06.94	70	J7T 780
2.2 4x4	06.94 - 10.97	74	J7T 600

T789G K045 80 85 90 100 -

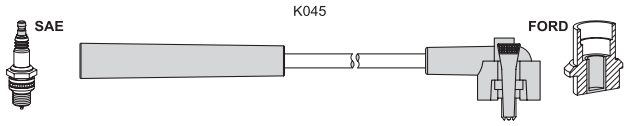

Ford Sierra (GBG, GB4) 1.8	05.88 - 02.93	64	R2C/R6A
Sierra Combi 1.8	05.88 - 02.93	64	R2C/R6A
Sierra Hatchback 1.8	05.88 - 02.93	64	R2C/R6A

T790G K339 85 85 95 100 -

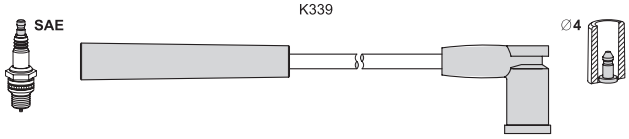

Ford Fiesta IV (JA_, JB_) 1.3 i	09.98 - 01.02	37	JJA/_E/_M/_C/_J/_K
1.3 i	09.98 - 01.02	44	J4R/_C/_L/_J/J_Q/_T
Ka (RB_) 1.3 i	09.98 - 11.08	36	JJH/JJD/JJF/JJG/JJL
1.3 i	09.98 - 10.02	37	JJB
1.3 i	09.98 - 11.08	44	J4S/_K/_M/_P/_N

T791B K533 26 28 31 40 K061 48

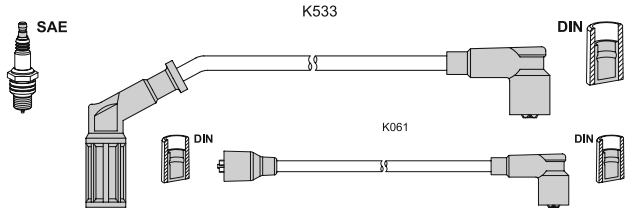

Lancia Y10 (156) 1.3 i.e. Fire	02.89 - 12.95	53	156 B.000/146 A 5._

T792B K041 37 45 55 65 K324 40

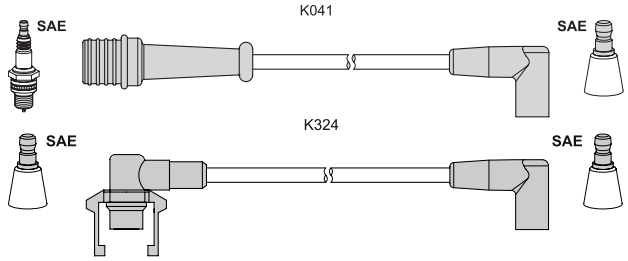

Renault 21 (B48_) 2.0	02.90 - 10.92	99	J7R 740
2.0 4x4	09.90 - 10.92	99	J7R 740
21 Combi (K48_) 2.0	06.90 - 02.94	99	J7R 740
21 Sedan (L48_) 2.0	02.90 - 06.94	99	J7R 740
2.0 4x4	12.89 - 02.94	99	J7R 740
2.0 Turbo	04.87 - 03.90	129	J7R 752
2.0 Turbo 4x4	08.89 - 10.93	129	J7R 752
2.0 Turbo 4x4	02.90 - 10.92	119	J7R 756
25 (B29_) 2.0 12V	06.89 - 12.92	99	J7R 726
2.0 12V	06.88 - 12.93	103	J7R 721/J7R 720

T 793P ▶

T793P K156 30 40 50 60 K158 60

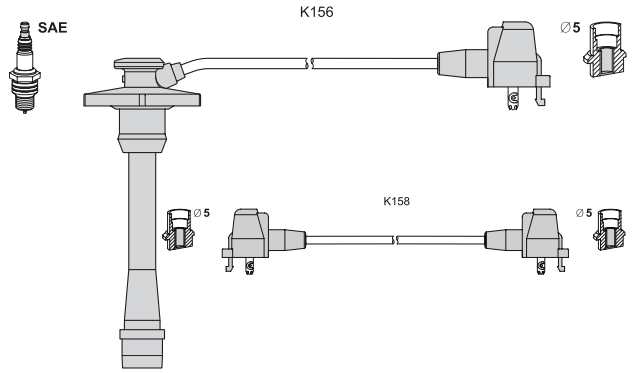

Toyota Carina E (_T19_) 1.6	12.93 - 09.97	73	4A-FE
1.6	12.93 - 09.97	85	4A-FE
1.6 16V	10.95 - 09.97	78	4A-FE
1.6 GLI	04.92 - 09.97	79	4A-FE
Carina E Sedan 1.6	01.95 - 09.97	73	4A-FE
1.6	01.93 - 09.97	79	4A-FE
1.6	10.95 - 09.97	78	4A-FE
1.6	12.94 - 09.97	85	4A-FE
Carina E Sportswag. 1.6	04.92 - 09.97	85	4A-FE
1.6 GLI	01.93 - 09.97	79	4A-FE
1.6 i	02.95 - 09.97	73	4A-FE

T795B K414 65 60 45 40 K075 45

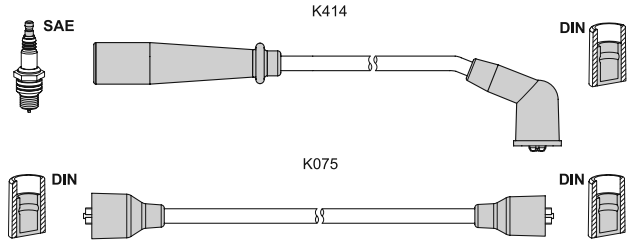

Kia Pride (DA) 1.1 i	01.91 -	38	B1
1.3 16V	01.90 -	44	B3
1.3 16V	01.90 -	53	B3
1.3 16V	10.96 -	47	B3
1.3 i	01.90 -	51	
Pride Combi 1.3	08.99 -	47	

T796B K414 40 45 60 65 K458 50

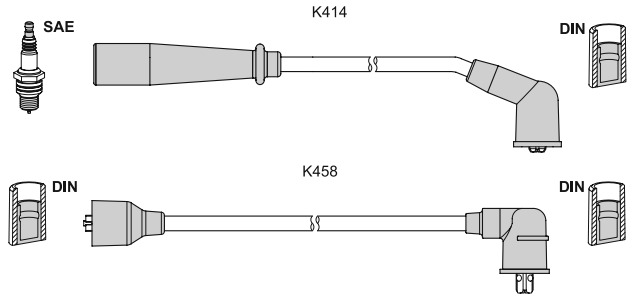

Kia Sephia (FA) 1.5 i 16V	02.96 - 10.97	59	B5
1.6 i	01.95 - 10.97	59	B6
Sephia Sedan 1.5 i 16V	02.96 - 10.97	59	B5
1.6 i	09.93 - 10.97	59	B6

T797B K027 65 40 45 30 -

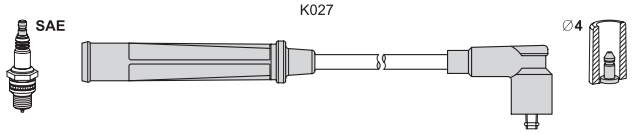

Kia Sportage (K00) 2.0 i 16V	10.99 - 08.03	94	FE (16 V)
2.0 i 16V 4WD	04.94 - 08.03	94	FE (16 V)
2.0 i 4WD	04.94 - 08.99	70	FE

T799B K217 60 70 70 80 K458 20

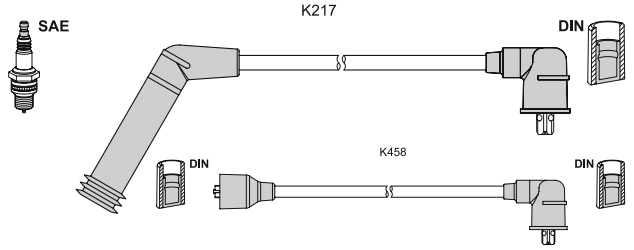

Hyundai H-1 / Starex 2.4	06.97 - 07.01	82	G4CS
2.4 4WD	02.98 - 07.01	82	G4CS
Sonata II (Y-2) 2.4 i	09.88 - 08.91	83	G4CS
Sonata III (Y-3) 1.8 i	05.93 - 06.98	72	G4CM
2.0 i	06.94 - 08.96	77	G4CP
2.0 i	08.96 - 06.98	70	

T800C K088 65 55 40 30 K090 55 alternative T064B

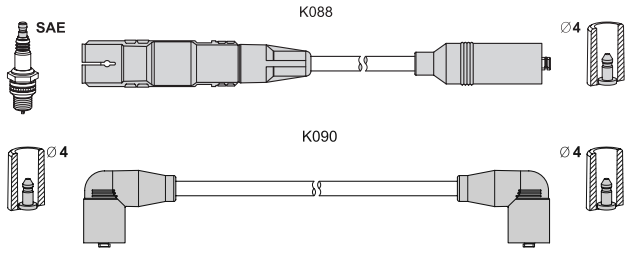

VW Golf III (1H1) 1.6	07.95 - 08.97	74	AFT/AKS
Golf III Cabriolet (1E7) 1.6	10.94 - 05.98	74	AFT/AKS
Golf III Variant (1H5) 1.6	07.94 - 04.99	74	AFT/AKS
Golf IV Cabriolet (1E7) 1.6	06.98 - 06.02	74	AFT/AKS
Vento (1H2) 1.6	10.94 - 09.98	74	AFT

T801C K087 100 90 85 75 70 60 K090 60 alternative T060B

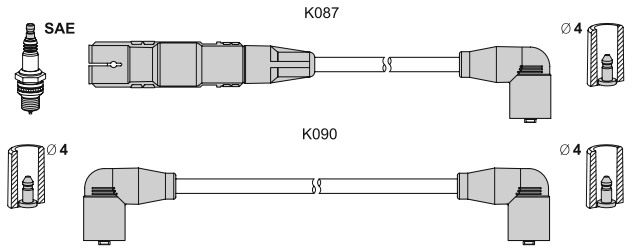

VW Golf III (1H1) 2.8 VR6	01.92 - 08.97	128	AAA
Passat (3A2, 35I) 2.8 VR6	06.91 - 08.96	128	AAA
Passat Variant 2.8 VR6	06.91 - 05.97	128	AAA
Vento (1H2) 2.8 VR6	01.92 - 09.98	128	AAA

T802C K088 65 55 40 30 K091 55 — **alternative T065B**

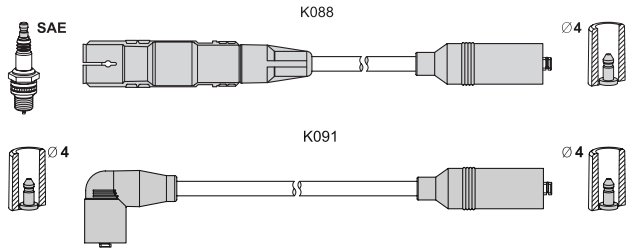

VW Passat (3A2, 35I) 1.6	10.94 - 08.96	74	AFT
Passat Variant 1.6	07.94 - 12.95	74	AFT
Polo Classic 100 (6KV2) 1.6	12.95 - 09.01	74	AFT
Polo Variant (6KV5) 1.6	05.97 - 09.01	74	AFT

T803C K087 100 85 100 70 95 55 - — **alternative T061B**

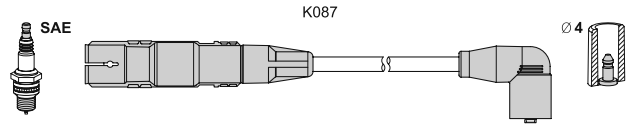

VW Transporter IV Bus 2.8 VR6	11.95 - 04.00	103	AES
2.8 VR6 Syncro	01.96 - 04.96	103	AES
Transporter IV Van 2.8 VR6	04.00 - 04.03	150	AMV
Transporter IV Flatbed 2.8	05.96 - 05.00	103	AES
Transporter IV Van 2.8 VR6	05.96 - 05.00	103	AES
2.8 VR6	06.00 - 04.03	150	AMV

T804S K140 45 25 25 25 -

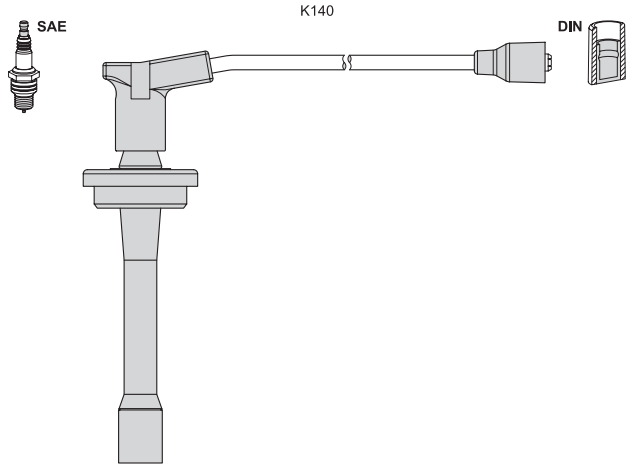

UAZ 2206, 3303 2.7i 16V	05.00 -	104	ZMZ 409.10
2.7i 16V	01.08 -	94	ZMZ 4091.10
2.7i 16V	12.11 -	92	ZMZ 40911.10
3741, 3962 2.7i 16V	05.00 -	104	ZMZ 409.10
2.7i 16V	01.08 -	94	ZMZ 4091.10
2.7i 16V	12.11 -	92	ZMZ 40911.10
3909 Farmer 2.7i 16V	05.00 -	104	ZMZ 409.10
2.7i 16V	01.08 -	94	ZMZ 4091.10
2.7i 16V	12.11 -	92	ZMZ 40911.10
31512 2.7i 16V	05.00 - 12.11	104	ZMZ 409.10
31514 2.7i 16V	05.00 - 12.11	104	ZMZ 409.10
3159 2.7i 16V	12.99 - 12.03	104	ZMZ 409.10
3160, 3162 Simbir 2.7i 16V	05.00 - 12.03	104	ZMZ 409.10
3163 Patriot 2.7i 16V	08.05 -	104	ZMZ 409.10
315195 Hunter 2.7i 16V	11.03 -	104	ZMZ 409.10
Pick Up 2.7i 16V	08.05 -	104	ZMZ 409.10

T805C K137 50 45 45 50 - — **alternative T009B**

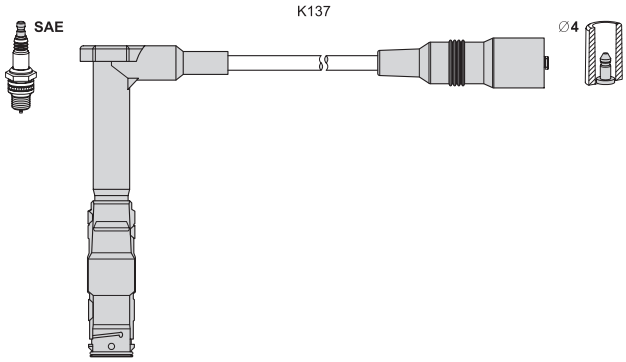

Mercedes 200 E (W124) 2.0	10.92 - 06.93	100	M 111.940
200 TE (S124) 2.0	10.92 - 06.93	100	M 111.940
220 E (W124) 2.2	10.92 - 06.93	110	M 111.960
220 CE (C124) 2.2	10.92 - 05.93	110	M 111.960
220 TE (S124) 2.2	10.92 - 05.93	110	M 111.960
C 180 (W202) 1.8	03.93 - 08.95	90	M 111.920
C 180 T (S202) 1.8	06.96 - 09.00	90	M 111.920
C 200 (W202) 2.0	01.94 - 08.95	100	M 111.941
C 220 (W202) 2.2	03.93 - 05.00	110	M 111.961
E 200 (W124) 2.0	06.93 - 06.95	100	M 111.940
E 220 (W124) 2.2	06.93 - 06.95	110	M 111.960
E 200 Cabrio (A124) 2.0	06.93 - 03.98	100	M 111.940
E 220 Cabrio (A124) 2.2	06.93 - 03.98	110	M 111.960
E 200 T (S124) 2.0	06.93 - 06.96	100	M 111.940
E 220 T (S124) 2.2	06.93 - 06.96	110	M 111.960
E 200 Coupe (C124) 2.0	06.93 - 06.97	100	M 111.940
E 220 Coupe (C124) 2.2	06.93 - 06.97	110	M 111.960

T806C K592 35 45 55 60 70 75 K444 100 — **alternative T007B**

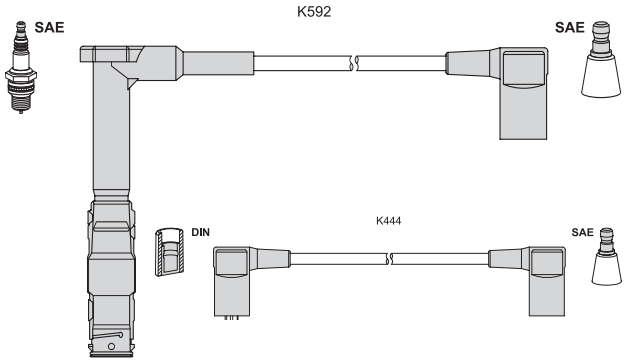

Mercedes 300 E (W124) 3.0	09.88 - 08.92	162	M 104.980
300 CE (C124) 3.0	09.89 - 12.92	162	M 104.980
300 CE Cabrio (A124) 3.0	04.92 - 06.93	162	M 104.980
300 TE (S124) 3.0	09.89 - 08.92	162	M 104.980
300 SL (R129) 3.0	03.89 - 07.93	170	M 104.981
S 320/300SE (W140) 3.2	03.91 - 10.98	170	M 104.990

T 807C ▶

T807C K592 100 90 100 90 100 80 100 105 K444 115/60 alternative T008B

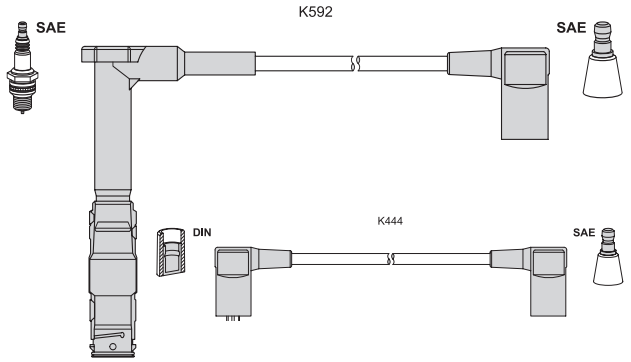

Mercedes 400 E (W124) 4.2	10.92 - 06.93	205	M 119.975
500 E (W124) 5.0	01.91 - 06.93	240	M 119.974
500 E AMG (W124) 6.0	01.92 - 06.93	275	
E 420 (W124) 4.2	06.93 - 06.95	205	M 119.975
E 500 (W124) 5.0	06.93 - 06.95	235	M 119.974
E 60 AMG (W124) 6.0	05.94 - 06.95	280	M 119.974 AMG
G 500 E (W463) 5.0	09.93 -	177	M 117.965
S 420/400 SE (W140) 4.2	02.91 - 10.98	210	M 119.971
S 420 (W140) 4.2	01.93 - 10.98	205	M 119.971
S 500 (W140) 5.0	02.91 - 10.98	240	M 119.970
S 500 (W140) 5.0	01.93 - 10.98	235	M 119.970
S Coupe 420 SEC/CL (C140)	10.94 - 02.99	205	M 119.971
S Coupe 500 SEC/CL (C140)	10.92 - 02.99	235	M 119.970
SL 500 (R129) 5.0	09.92 - 10.01	235	M 119.972

T808C K447 30 25 25 30 25 25 25 25 30 25 25 30 - alternative T071B

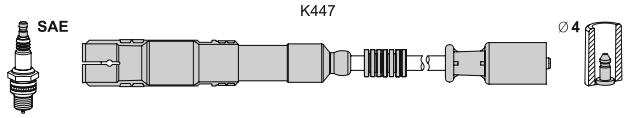

Mercedes Crossfire 3.2	07.03 - 12.07	160	EGX
Crossfire 3.2 SRT_6	09.04 - 12.07	246	EGZ
Crossfire Roadster 3.2	05.04 - 12.07	160	EGX
Crossfire Road. 3.2 SRT_6	09.04 - 12.07	246	EGZ
C 240 (W202)	06.97 - 05.00	125	M 112.910
C 280 (W202)	06.97 - 05.00	145	M 112.920
C 230 (W203) 2.5	01.05 - 02.07	150	M 272.920
C 240 (W203) 2.6	05.00 - 02.07	125	M 112.912
C 240 4-matic (W203) 2.6	07.02 - 02.07	125	M 112.916
C 32 AMG Kompr. (W203)	02.01 - 02.07	260	M 112.961
C 320 (W203)	05.00 - 02.07	160	M 112.946
C 320 4-matic (W203)	07.02 - 02.07	160	M 112.953
C 350 (W203)	01.05 - 02.07	200	M 272.960
C 350 4-matic (W203)	01.05 - 02.07	200	M 272.970
C 240 T (S202) 2.4	06.97 - 09.00	125	M 112.910
C 240 T (S202) 2.6	09.00 - 03.01	125	M 112.915
C 280 T (S202)	06.97 - 03.01	145	M 112.920
C 240 (S203) 2.6	03.01 - 08.07	125	M 112.912
C 240 4-matic (S203) 2.6	07.02 - 08.07	125	M 112.916
C 32 AMG Kompr. (S203)	03.01 - 08.07	260	M 112.961
C 320 (S203)	03.01 - 08.07	160	M 112.946
C 320 4-matic (S203)	07.02 - 08.07	160	M 112.953
C 350 (S203)	01.05 - 08.07	200	M 272.960
C 350 4-matic (S203)	01.05 - 08.07	200	M 272.970
C 32 AMG Kompr. Coupe	05.02 - 05.08	260	M 112.961
C 320 Coupe (CL203)	09.02 - 05.08	160	M 112.946
C 350 Coupe (CL203)	01.05 - 05.08	200	M 272.960
CLK 320 (C208)	06.97 - 06.02	160	M 112.940
CLK 240 (C209) 2.6	06.02 - 05.09	125	M 112.912
CLK 320 (C209)	06.02 - 05.09	160	M 112.955
CLK 320 Cabrio (A208)	03.98 - 03.02	160	M 112.940

< T808C

Mercedes CLK 240 Cabrio (A209) 2.6	02.03 - 03.10	125	M 112.912
CLK 320 Cabrio (A209)	02.03 - 03.10	160	M 112.955
E 240 (W210) 2.4	06.97 - 08.00	125	M 112.911
E 240 (W210) 2.6	08.00 - 03.02	125	M 112.914
E 280 (W210)	12.96 - 03.02	150	M 112.921
E 280 4-matic (W210)	12.96 - 03.02	150	M 112.921
E 320 (W210)	06.97 - 03.02	165	M 112.941
E 320 4-matic (W210)	06.97 - 03.02	165	M 112.941
E 240 (W211) 2.6	03.02 - 12.08	130	M 112.917/_.913
E 240 4-matic (W211) 2.6	03.03 - 12.08	130	M 112.917
E 320 (W211)	03.02 - 12.08	165	M 112.949
E 320 4-matic (W211)	03.03 - 12.08	165	M 112.954
E 240 T (S210) 2.4	06.97 - 03.03	125	M 112.911
E 240 T (S210) 2.6	08.00 - 03.03	125	M 112.914
E 280 T (S210)	12.96 - 03.03	150	M 112.921
E 280 T 4-matic (S210)	12.96 - 03.03	150	M 112.921
E 320 T (S210)	12.96 - 03.03	165	M 112.941
E 320 T 4-matic (S210)	12.96 - 03.03	165	M 112.941
E 240 T (S211) 2.6	03.03 - 07.09	130	M 112.913
E 240 T 4-matic (S211) 2.6	07.03 - 07.09	130	M 112.917
E 320 T (S211)	03.03 - 07.09	165	M 112.949
E 320 T 4-matic (S211)	07.03 - 07.09	165	M 112.954
G 320 (W463)	07.97 -	158	M 112.945
G 320 Cabrio (W463)	11.97 -	158	M 112.945
ML 320 (W163)	02.98 - 08.02	160	M 112.942
ML 350 (W163) 3.7	02.03 - 06.05	173	M 112.970
ML 350 (W163) 3.7	08.02 - 06.05	180	M 112.970
S 280 (W220)	10.98 - 08.05	150	M 112.922
S 320 (W220)	10.98 - 08.05	165	M 112.944
S 350 (W220) 3.7	09.02 - 08.05	180	M 112.972
S 350 4-matic (W220) 3.7	06.03 - 08.05	180	M 112.975
SL 280 (R129)	05.98 - 10.01	150	M 112.923
SL 320 (R129)	05.98 - 10.01	165	M 112.943
SL 350 (R230) 3.7	03.03 - 01.12	180	M 112.973
SLK 320 (R170)	03.01 - 04.04	260	M 112.960
SLK 320 AMG Kompr. (R170)	03.00 - 04.04	160	M 112.947
Viano (W639) 3.0	09.03 -	140	M 112.951
Viano (W639) 3.2	09.03 -	160	M 112.951
Viano (W639) 3.7	06.04 -	170	M 112.976
Vito / Mixto 119 Van 3.2	09.03 -	140	M 112.951
Vito / Mixto 122 Van 3.2	09.03 -	160	M 112.951
Vito 119 Bus (W639) 3.2	09.03 -	140	M 112.951
Vito 122 Bus (W639) 3.2	09.03 -	160	M 112.951
Vito 123 Bus (W639) 3.7	06.04 -	170	M 112.976

T809C K447 35 30 30 30 30 30 25 25 25 25 25 25 25 25 25 30 - alternative T072B

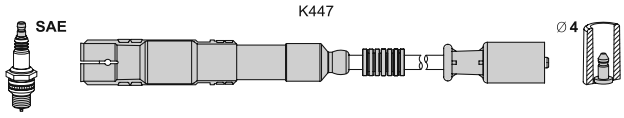

Mercedes C 43 AMG (W202)	08.97 - 05.00	225	M 113.944
C 55 AMG (W203)	02.04 - 02.07	270	M 113.988
C 43 AMG (S202)	08.97 - 03.01	225	M 113.944
C 55 AMG (S203)	02.04 - 08.07	270	M 113.988
CLK 430 (C208)	07.98 - 06.02	205	M 113.943
CLK 55 AMG (C208)	08.99 - 06.02	255	M 113.981/_.984
CLK 500 (C209) 5.0	06.02 - 05.09	225	M 113.968
CLK 500 (C209) 5.5	06.06 - 05.09	285	M 273.965
CLK 55 AMG (C209)	09.02 - 05.09	270	M 113.987
CLK 430 Cabrio (A208)	09.98 - 03.02	205	M 113.943
CLK 55 AMG Cabrio (A208)	01.00 - 03.02	255	M 113.981/_.984
CLK 500 Cabrio (A209)	02.03 - 03.10	225	M 113.968
CLK 55 AMG Cabrio (A209)	02.03 - 03.10	270	M 113.987
CLS 500 (C219)	10.04 - 12.10	225	M 113.967
CLS 55 AMG (C219)	01.05 - 12.10	350	M 113.990

< T809C			
Mercedes E 430 (W210)	06.97 - 03.02	205	M 113.940
E 430 4-matic (W210)	05.99 - 03.02	205	M 113.940
E 55 AMG (W210)	08.97 - 03.02	260	M 113.980
E 55 AMG 4-matic ((W210)	03.01 - 03.02	260	M 113.980
E 500 (W211) 5.0	03.02 - 12.08	225	M 113.967
E 500 (W211) 5.5	04.06 - 12.08	285	M 273.960
E 500 4-matic (W211)	10.03 - 12.08	225	M 113.969
E 500 4-matic (W211)	04.06 - 12.08	285	M 273.962
E 55 AMG Kompr. (W211)	10.02 - 12.08	350	M 113.990
E 430 T (S210)	06.97 - 03.03	205	M 113.940
E 430 T 4-matic (S210)	05.99 - 03.03	205	M 113.940
E 55 T AMG (S210)	08.97 - 03.03	260	M 113.980
E 55 T AMG 4-matic (S210)	03.01 - 03.03	260	M 113.980
E 500 T (S211) 5.0	10.03 - 07.09	225	M 113.967
E 500 T (S211) 5.5	04.06 - 07.09	285	M 273.960
E 500 T 4-matic (S211) 5.0	10.03 - 07.09	225	M 113.969
E 500 T 4-matic (S211) 5.5	04.06 - 07.09	285	M 273.962
E 55 T AMG Kompr. (S211)	07.03 - 07.09	350	M 113.990
G 500 (W463)	04.98 -	218	M 113.962
G 55 AMG (W463)	04.99 -	260	M 113.982
G 55 AMG (W463)	06.04 -	350	M 113.993
G 55 AMG (W463)	08.06 -	368	M 113.993
G 55 AMG (W463)	08.08 -	373	M 113.993
G 500 Cabrio (W463)	04.98 -	218	M 113.962
ML 430 (W163)	02.98 - 06.05	200	M 113.942
ML 500 (W163)	09.01 - 06.05	215	M 113.964/_965
ML 55 AMG (W163)	02.00 - 06.05	255	M 113.981
ML 500 4-matic (W164)	07.05 -	225	M 113.964
R 500 4-matic (W251)	01.06 -	225	M 113.971
S 430 (W220)	10.98 - 08.05	205	M 113.941
S 430 4-matic (W220)	09.02 - 08.05	205	M 113.948
S 500 (W220)	10.98 - 08.05	225	M 113.960
S 500 4-matic (W220)	09.02 - 08.05	225	M 113.966
S 55 AMG (W220)	04.99 - 08.05	265	M 113.986
S 55 AMG Kompr. (W220)	06.02 - 08.05	368	M 113.991
S Coupe CL 500 (C215)	03.99 - 03.06	225	M 113.960
CL 55 AMG (C215)	10.99 - 03.06	265	M 113.986
CL 55 AMG Kompr.	06.02 - 03.06	368	M 113.991
SL 500 (R129)	05.98 - 10.01	225	M 113.961
SL 55 AMG (R129)	03.00 - 10.01	260	M 113.985
SL 500 (R230) 5.0	10.01 - 01.12	225	M 113.963
SL 500 (R230) 5.5	03.06 - 01.12	285	M 273.965
SL 55 AMG (R230)	03.06 - 01.12	380	M 113.995
SL 55 AMG (R230)	10.01 - 06.02	350	M 113.992
SL 55 AMG Kompr. (R230)	06.02 - 01.12	368	M 113.992
SLK 55 AMG (R171)	06.04 - 02.11	265	M 113.989
SLR (R199) 5.4	04.04 -	460	M 155.980
SLR (R199) 5.4 722 Edition	10.06 -	478	M 155.980
SLR Roadster (R199) 5.4	04.07 -	460	M 155.980
SLR Roadster (R199) 5.4	10.06 -	478	M 155.980

T810C K213 35 40 40 45 - alternative T080B

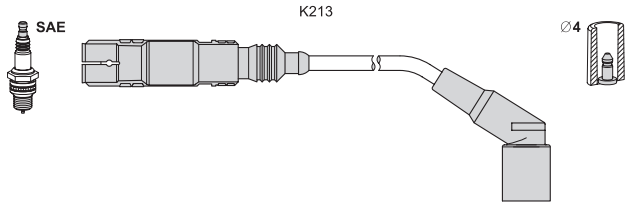

BMW 316 i (E46) 1.6	04.00 - 02.05	77	M43 B16
316 i (E46) 1.9	09.98 - 02.05	77	M43 B19 (194E1)
318 i (E36) 1.8	10.93 - 02.98	85	M43 B18
318 i (E46) 1.9	02.98 - 09.01	87	M43B19/M43B19 TU
318 i Cabriolet (E36) 1.8	01.94 - 04.99	85	M43 B18
316 i Compact (E36) 1.9	12.98 - 08.00	77	M43 B19 (194E1)

< T810C			
BMW 316 Ci Coupe (E46) 1.6	04.00 -	77	M43 B16 (164E3)
318 Ci Coupe (E46) 1.9	11.99 - 09.01	87	M43 B19
318 i Touring (E36) 1.8	07.95 - 10.99	85	M43 B18
318 i Touring (E46) 1.9	10.99 - 09.01	87	M43B19/M43B19 TU
518 i (E34) 1.8	08.89 - 09.95	85	M43 B18
Z3 (E36) 1.8	10.95 - 10.98	85	M43 B18

T811C K213 35 35 40 45 - alternative T075B

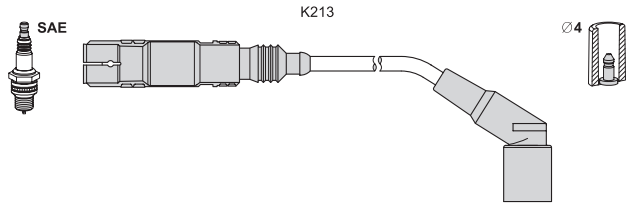

BMW 318 Ci Cabrio (E46) 1.8	09.01 -	105	N42 B20/N46 B20
518 g Touring (E34) 1.8	11.95 - 06.96	85	M43 B18
518 i Touring (E34) 1.8	09.94 - 01.97	85	M43 B18
Z3 (E36) 1.9	07.98 - 01.03	87	M43B19/M43 194 E1
1.9	01.99 - 01.03	85	M43 194 E1

T812C K083 85 75 75 70 - alternative T025B

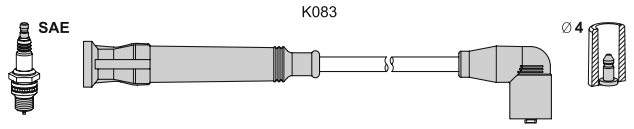

Alfa Romeo 145 1.7 i.e. 16V	10.94 - 12.96	95	AR 33401
146 (930) 1.7 i.e. 16V	12.94 - 12.96	95	AR 33401

T813B K106 55 40 60 50 75 60 K076 50

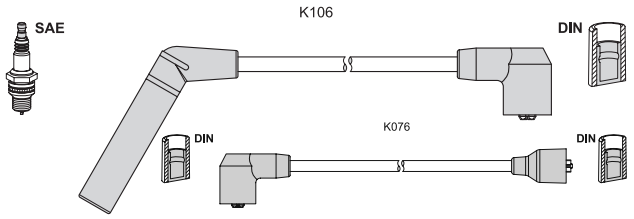

Chrysler Le Baron 3.0 i V6	01.90 - 12.94	105	EFA
Le Baron Cabriolet 3.0 i V6	01.90 - 12.96	105	6G72
Saratoga 3.0	09.89 - 12.95	105	6G72
Voyager II (ES) 3.0 i	01.91 - 09.95	108	300/6G72
Voyager III (GS) 3.0	01.95 - 03.01	112	EFA

T814B K107 35 35 40 40 K070 35

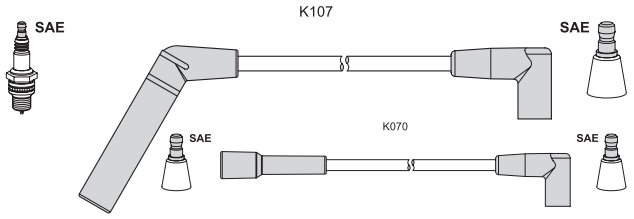

Chrysler Voyager III (GS) 2.0i	01.95 - 03.01	98	C00
2.4 i	01.95 - 12.96	111	B00

T 815B ▶

T815B K451 30 40 50 60 -

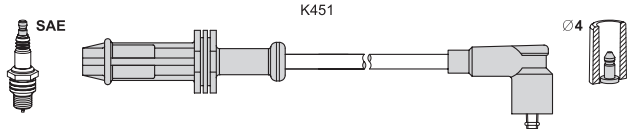

Citroen AX 10 (ZA-_) 1.0	01.92 - 12.98	33	CDY (TU9M)
1.0	02.87 - 12.98	37	CDZ (TU9M)
AX 11 (ZA-_) 1.1	05.92 - 12.97	44	HDZ (TU1M)
AX 14 (ZA-_) 1.4	01.93 - 04.97	55	KDY (TU3FM)/KDX
1.4 4x4	01.93 - 12.96	55	KDY (TU3FM)/KDX
AX (ZA-_) 1.4 GTi	08.91 - 12.96	66	KFY (TU3FJ2)
1.4 GTi	06.91 - 12.96	69	KFZ (TU3FJ2)
1.4 GTi	06.91 - 12.92	74	KFZ (TU3FJ2)
Berlingo (MF) 1.1 i	07.96 -	44	HDZ (TU1M)
1.4 i	07.96 -	55	KFX (TU3JP)/KFW
Berlingo Van (M_) 1.1 i	07.96 -	44	HDZ (TU1M)/HFX
1.4 i	07.96 -	55	KFX (TU3JP)/KFW
Saxo (S0, S1) 1.0 X	05.96 - 11.98	33	CDZ (TU9M)
1.0 X	05.98 - 06.03	37	CDZ (TU9M)
1.1 X,SX	05.96 - 09.03	40	HDZ (TU1M)
1.1 X,SX	05.96 - 08.00	44	HDZ (TU1M)
1.4 VTS	05.96 - 01.98	55	KFX (TU3JP)/KFW
1.6	02.96 - 06.03	66	NFZ (TU5JP)
1.6	02.01 - 04.04	74	NFT
1.6	02.96 - 04.04	88	NFX (TU5JP4)
1.6 VTL,VTR	05.96 - 06.03	65	NFZ (TU5JP)
1.6 VTS	06.96 - 09.03	87	NFX (TU5JP4)
1.6 VTS	09.00 - 09.03	72	NFT
Xsara (N1) 1.4 i	04.97 - 03.05	55	KFX (TU3JP)
1.6 i	04.97 - 09.00	65	NFZ (TU5JP)
Xsara Break (N2) 1.4 i	10.97 - 08.05	55	KFX (TU3JP)
1.6 i	10.97 - 09.00	65	NFZ (TU5JP)
Xsara Coupe (N0) 1.4 i	03.98 - 03.05	55	KFX (TU3JP)
1.6 i	02.98 - 09.00	65	NFZ (TU5JP)
Xsara Picasso (N68) 1.6	12.99 -	65	NFZ (TU5JP)
ZX (N2) 1.4	03.91 - 06.97	55	KDZ (TU3M/Z)
1.4 i	03.91 - 06.97	55	KDZ / KFX / KDX
ZX Break (N2) 1.4 i	10.93 - 10.97	55	KFX / KDX / KDY
Peugeot 106 I (1A, 1C) 1.0	09.91 - 04.96	33	TU9/CDY (TU9M)
1.0	09.91 - 04.96	37	CDZ (TU9M)
1.1	09.91 - 04.96	44	HDZ (TU1M)
1.3	10.93 - 04.96	72	TU2J2
1.4	06.93 - 04.96	55	KDX (TU3MC)
1.4	09.91 - 04.96	69	KFZ (TU3J2/Z)
1.6	06.93 - 04.96	65	NFZ (TU5JP)
1.6	01.94 - 04.96	76	NFY (TU5J2)
106 II (1) 1.0 i	05.96 -	33	CDY (TU9M)
1.0 i	01.97 -	37	CDZ (TU9M)
1.1 i	01.97 - 06.00	40	HDY (TU1M)
1.1 i	05.96 -	44	HDZ (TU1M)
1.4 i	05.96 - 06.97	55	KFX (TU3JP)/KFW
1.6 i	05.96 -	65	NFZ (TU5JP)
1.6 i	05.96 -	74	NFW (TU5J2)/NFY
205 II (20A/C) 1.4	06.87 - 12.89	62	K2B (TU3S)
206 CC (2A/C) 1.1 i	09.98 -	44	HFZ (TU1JP)/HFX
306 (7B, N3, N5) 1.1	06.94 - 05.01	44	HDZ (TU1M)
1.4 SL	06.94 - 06.97	55	KDX / KFX / KFW
1.6 SR	06.94 - 06.97	65	NFZ (TU5JP)
306 Break (7E, N3, N5) 1.4	03.97 - 05.98	55	KFX (TU3JP)/KFW
1.6	03.97 - 07.98	65	NFZ (TU5JP)
306 Cabrio (7D, N3, N5) 1.6	04.96 - 10.00	65	NFZ (TU5JP)
306 CC (7A, 7C, N3, N5) 1.1	05.93 - 05.01	44	HDZ (TU1M)
1.4	05.93 - 05.97	55	KDX / KFX / KFW
1.6	05.93 - 10.00	65	NFZ (TU5JP)
405 II (4B) 1.4	08.92 - 10.95	55	KDX (TU3MC)

< T815B

Peugeot 405 II Break (4E) 1.4	08.92 - 10.96	55	KDX (TU3MC)
Partner Combispace 1.1	06.96 -	44	HDZ (TU1M)/HFX
1.4	06.96 - 11.02	55	KFX (TU3JP)
Partner Van (5) 1.1	06.96 -	44	HDZ (TU1M)
1.4	06.96 -	55	KFX (TU3JP)/TU32

T817B K328 30 60 65 85 90 100 K500 40

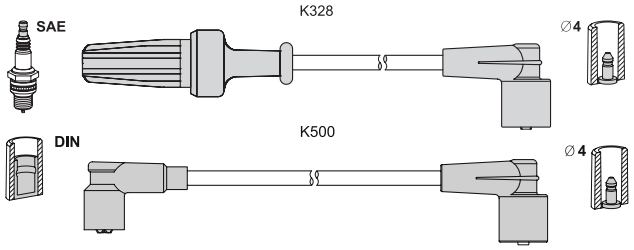

Citroen XM (Y3) 3.0	05.89 - 05.94	123	
3.0 V6	05.89 - 06.94	123	UFZ (ZPJ/Z)/SFZ
XM (Y4) 3.0 V6	05.94 - 10.00	123	UFZ (ZPJ/Z)/SFZ
XM Break (Y3) 3.0	05.89 - 07.94	123	
3.0 V6	11.91 - 04.94	123	UFZ (ZPJ/Z)/SFZ
XM Break (Y4) 3.0 V6	05.94 - 10.00	123	UFZ (ZPJ/Z)/SFZ
Peugeot 605 (6B) 3.0	10.89 - 09.99	123	UFZ (ZPJ)

T818C K099 75 65 60 55 - alternative T002B

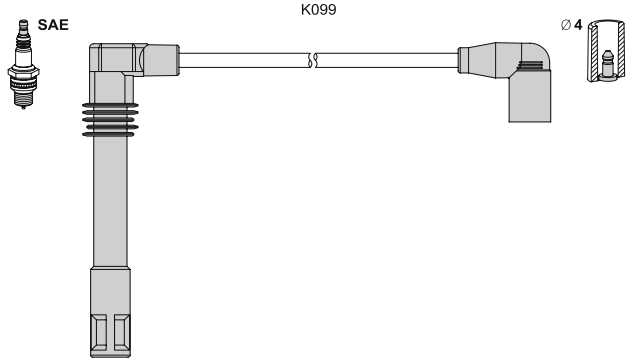

Audi A3 (8L1) 1.8	09.96 - 08.00	92	AGN/APG
Skoda Octavia (1U2) 1.8	09.96 - 07.00	92	AGN
Octavia Combi 1.8 20V	07.98 - 07.00	92	AGN

T819C K081 70 55 50 40 K090 50 alternative T053B

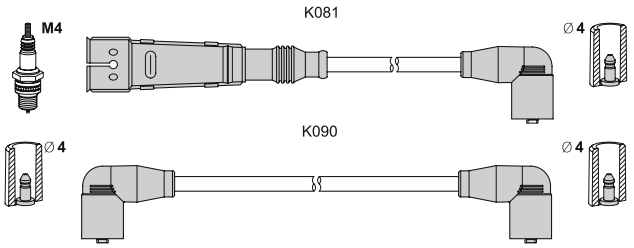

Seat Arosa (6H) 1.0	05.97 - 06.04	37	AER
1.4	05.97 - 06.04	44	AEX
Cordoba (6K1/6K2) 1.0 i	09.96 - 06.99	37	AER
1.4	12.97 - 04.99	40	ANX
1.4 i	06.94 - 06.99	44	AEX/AKV
1.6 i	02.93 - 06.99	55	ALM/AEE
Cordoba Vario (6K5) 1.4 i	09.96 - 06.99	44	AEX/AKV
Ibiza II (6K1) 1.0 i	09.96 - 08.99	37	AER
1.4 i	09.93 - 08.99	44	AEX/AKV/APQ
1.6 i	03.93 - 08.99	55	ALM/AEE
Inca (6K9) 1.4 i	11.95 - 06.03	44	AEX/AKV

< T819C			
Seat Inca (6K9) 1.6 i	11.95 - 05.98	55	1F
VW Polo 50 (6N1) 1.0	09.96 - 10.99	37	AER/ALL

T820C K081 50 50 80 80 K091 60 — **alternative T054B**

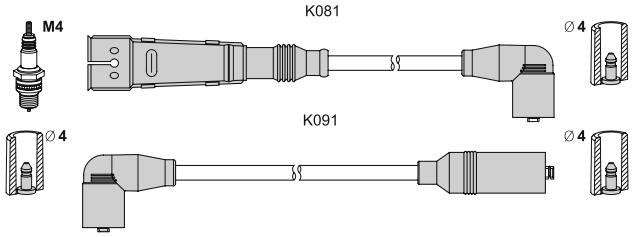

Seat Cordoba (6K2/C2) 1.4 i	06.94 - 06.99	44	ABD
1.6 i	02.93 - 06.99	55	ABU
Ibiza II (6K1) 1.4 i	09.93 - 08.99	44	ABD
VW Golf III (1H1) 1.4	11.91 - 08.97	40	AEX/ABD
1.4	10.91 - 08.97	44	ABD
Golf III Variant (1H5) 1.4	07.93 - 04.99	40	ABD
1.4	07.93 - 04.99	44	ABD

T821C K080 60 50 40 35 K090 60 — **alternative T040B**

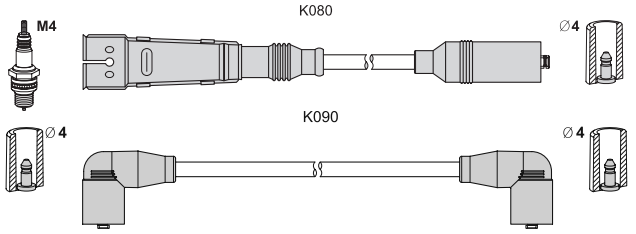

Seat Cordoba (6K2/C2) 1.8 i	02.93 - 06.99	66	ABS
Ibiza II (6K1) 1.8 i	03.93 - 08.99	66	ABS
2.0 i	03.93 - 08.99	85	2E/AGG
Toledo I (1L) 1.8 i	11.93 - 12.96	66	ABS
2.0 i	05.91 - 03.99	85	2E
VW Golf II (19E, 1G1) 1.8 GTI	04.90 - 07.91	118	PG
1.8 Syncro	08.88 - 07.91	72	1P
Golf III (1H1) 1.8	11.91 - 08.97	55	AAM
1.8	11.91 - 08.97	66	ABS
1.8 Syncro	01.93 - 08.97	66	ABS
Golf III Cabrio (1E7) 1.8	07.93 - 05.98	55	AAM
1.8	07.93 - 05.98	66	ABS
Golf III Variant (1H5) 1.8	07.93 - 04.99	55	ANN/AAM
1.8	07.93 - 04.99	66	ANP
Golf IV Cabrio (1E7) 1.8	06.98 - 06.02	55	ANN/AAM
Passat (3A2, 35I) 2.0	02.90 - 08.96	85	2E
2.0	03.95 - 08.96	79	AEP
2.0 syncro	10.90 - 08.96	85	2E
Passat Variant 2.0	02.90 - 05.97	85	2E
2.0	03.95 - 08.96	79	AEP
2.0 syncro	10.90 - 05.97	85	2E
Vento (1H2) 1.8	11.91 - 09.98	55	AAM
1.8	11.91 - 09.98	66	ABS

T822B K524 70 65 50 45 -

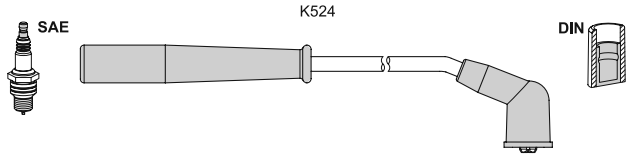

Mazda 323 F VI (BJ) 1.4	01.01 - 05.04	53	B3 (16V)
1.4 16V	09.98 - 01.01	54	B3 ME
323 S VI (BJ) 1.4	01.01 - 05.04	53	B3 (16V)
1.4 16V	09.98 - 01.01	54	B3 ME

T823C K087 100 85 85 70 70 55 - — **alternative T062B**

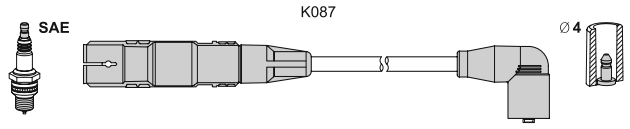

Ford Galaxy (WGR) 2.8 i V6	11.95 - 04.00	128	AAA
2.8 i V6 4x4	04.96 - 04.00	128	AAA
VW Corrado (53I) 2.9 VR6	08.91 - 12.95	140	ABV
Golf III (1H1) 2.8 VR6	01.92 - 08.97	128	AAA
2.9 VR6 Syncro	10.94 - 08.97	140	ABV
Golf III Variant 2.9 VR6	10.94 - 04.99	140	ABV
2.9 VR6 Syncro	10.94 - 04.99	140	ABV
New Beetle 3.2 RSI 4 mot	04.00 - 05.01	165	AXJ
Passat (3A2, 35I) 2.8 VR6	06.91 - 08.96	128	AAA
Passat Variant 2.8 VR6	06.91 - 05.97	128	AAA
2.9 VR6 Syncro	01.94 - 05.97	135	ABV
Sharan 2.8 VR6	09.95 - 04.00	128	AAA
2.8 VR6 Syncro	11.96 - 04.00	128	AAA
Vento (1H2) 2.8 VR6	01.92 - 09.98	128	AAA

T824C K083 65 70 75 75 45 55 55 65 - — **alternative T026B**

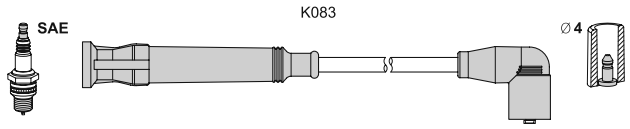

Alfa Romeo 155 1.7 T.S.	04.93 - 04.96	83	AR 67103
1.7 T.S.	04.93 - 04.96	85	AR 67105
1.8 T.S.	02.92 - 12.97	77	AR 67402
1.8 T.S.	02.92 - 06.93	95	AR 67101
1.8 T.S. Sport	01.92 - 12.96	93	AR 67101/AR 67102
2.0 T.S.	02.92 - 04.93	106	AR 67201
2.0 T.S.	02.92 - 02.95	104	AR 67202

T827B K105 55 65 75 80 K061 50

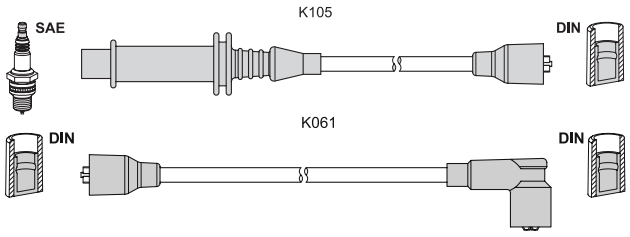

Citroen C15 (VD-_) 1.0	10.84 - 12.97	33	XV8/TU9
1.4	07.87 - 12.96	49	K1H (TU3A)

T828B K501 67 50 45 42 -

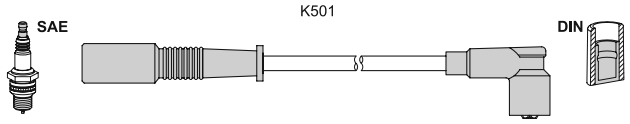

Fiat Palio (178BX) 1.4	04.96 -	51	178 B2.000
1.4 cat	04.96 -	51	178 B2.016
Palio Weekend 1.4	07.97 - 08.01	51	178 B2.000
Siena (178_) 1.4	04.96 -	51	178 B2.000
1.4 cat	04.96 -	51	178 B2.016

T 829B ▶

T829B K453 20 45 55 K187 25 K061 90

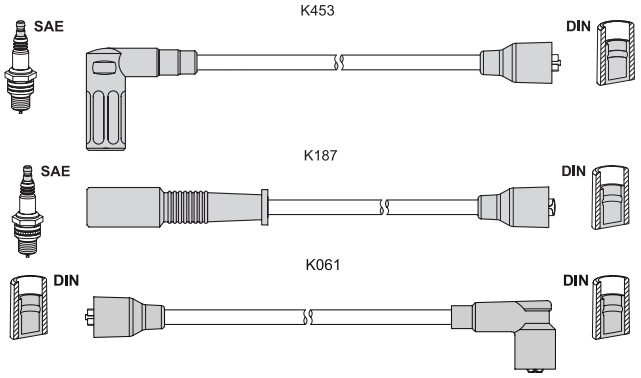

Fiat Regata 85 (138) 1.6	10.83 - 06.90	60	149 A.000
Regata 90 (138) 1.6 i.e.	01.87 - 07.89	66	149 C2.000
Regata 90 Week. 1.6 i.e.	01.87 - 07.89	66	149 C2.000
Regata 100 (138) 1.6 Super	10.83 - 12.90	74	149 A2.000/_ A4.000
Tempra (159) 1.4 i.e.	03.91 - 08.96	57	159 A2.000
Tempra S.W. 1.4 i.e.	03.91 - 08.96	57	159 A2.000
Uno 75 (146A/E) 1.5 i.e.	10.85 - 12.93	55	149 C1.000/138 C2._
Lancia Delta I (831AB0) 1.1	01.86 - 12.90	47	831 B8.000
1.3	09.79 - 08.92	55	831 A2.000/_B.000
1.3	09.83 - 08.92	58	831 A2.000
1.5	11.82 - 12.92	63	831 A1.000/_B1.000
Prisma (831AB0) 1.3	01.83 - 02.92	58	831 A2.000
1.5	01.83 - 04.86	63	831 A1.000
1.5	09.85 - 02.92	55	831 B1.048

T830B K467 40 40 55 65 -

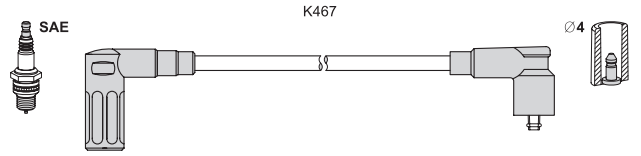

Fiat Punto 90 (176) 1.6	01.94 - 04.97	65	176 A9.000
Punto 90 Cabrio 1.6	04.94 - 04.97	65	176 A9.000
Lancia Dedra (835) 1.6 LE cat	07.94 - 07.99	66	159 B9.000
Dedra S.W. (835) 1.6	10.94 - 07.99	66	159 B9.000

T832B K011 55 55 60 65 -

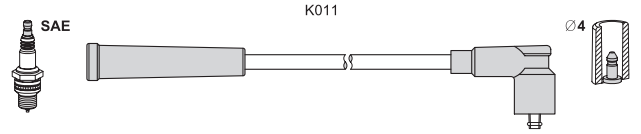

FSO Polonez III 1.6 i	09.92 - 03.02	57	
Polonez III Sedan 1.6 i	09.92 - 03.02	57	

T833B K109 60 60 70 75 -

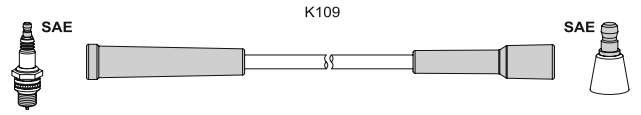

FSO Polonez II 1.5 i	08.88 - 08.92	55	
Polonez III 1.6 i	09.92 - 03.02	57	
Polonez III Sedan 1.6 i	09.92 - 03.02	57	

T834B K108 30 35 50 55 K061 80

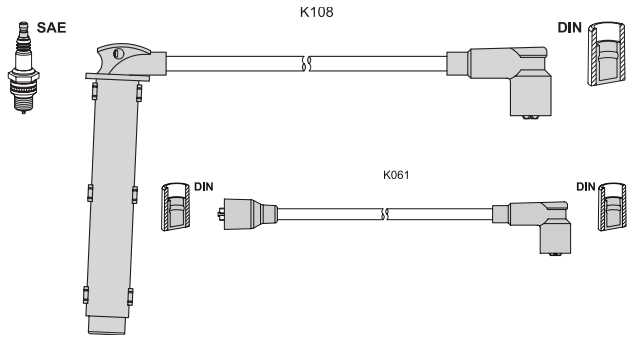

FSO Polonez III 1.4 i 16V	09.92 - 03.02	76	Rover K16 DOHC

T835B K012 60 60 70 80 K061 70

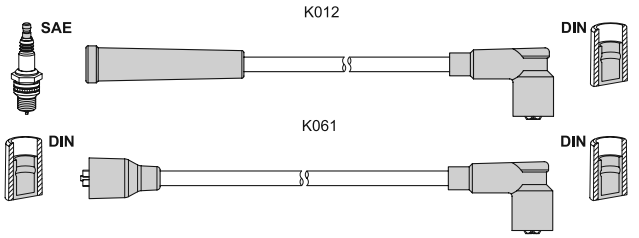

Honda Civic I Shuttle 1.5	10.83 - 10.87	63	EW2
1.5 4WD	01.85 - 10.87	63	EW2
Civic II Hatchback 1.5 GL	10.83 - 10.87	63	EW2
1.5 GT	01.85 - 10.87	74	EW3
CRX I (AF, AS) 1.5 i	10.83 - 11.86	74	EW3

T837B K217 60 70 70 80 K458 20

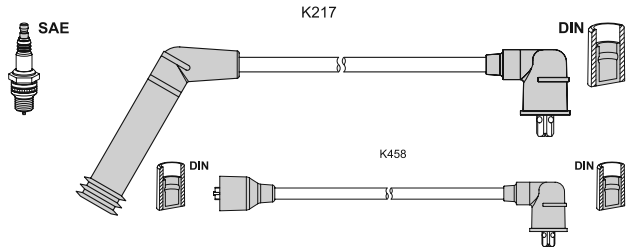

Hyundai Lantra I (J-1) 1.5 i.e.	10.90 - 11.95	63	G15B/G4DJ
Pony (X-2) 1.3	10.89 - 01.95	43	G4DG
1.3	10.89 - 01.95	49	G4DG
1.5	10.89 - 01.95	53	G15B
1.5 i	10.89 - 01.95	61	G15B
1.5 i	10.89 - 01.95	62	G15B
Pony/Excel Sedan 1.3	01.90 - 01.95	49	G4DG
1.5	01.90 - 01.95	53	G15B
1.5 i	01.90 - 01.95	61	G15B
1.5 i	01.90 - 01.95	62	G15B
S Coupe (SLC) 1.5 i	02.90 - 05.96	62	G15B/G4DJ
1.5 i	04.92 - 05.96	65	G4EK
1.5 i Turbo	04.91 - 05.96	85	G4EK-TC

T838B K217 58 60 72 76 K458 34

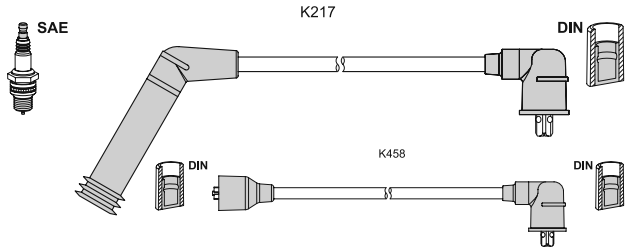

Hyundai Pony (X-2) 1.5	10.89 - 01.95	53	G4DJ
1.5 i	10.89 - 01.95	61	G4DJ
1.5 i	10.89 - 01.95	62	G4DJ
Pony/Excel Sedan 1.5	01.90 - 01.95	53	G4DJ
1.5 i	01.90 - 01.95	61	G4DJ
1.5 i	01.90 - 01.95	62	G4DJ

T840B K335 30 40 50 60 K316 90

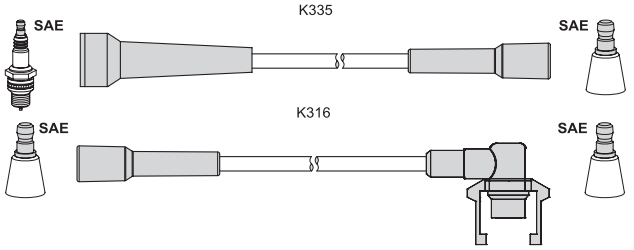

Renault 9 (L42_) 1.7	10.86 - 12.88	54	F3N 718
1.7	10.86 - 12.88	55	F2N 730
1.7	09.84 - 12.88	59	F2N 704/F2N 700
1.7	10.86 - 12.88	65	F2N 798/710/708
1.7	06.87 - 12.88	69	F3N 708
11 (B/C37_) 1.7	10.86 - 12.88	54	F2N 730
1.7	10.84 - 12.88	55	F3N 718
1.7	10.83 - 12.87	59	F2N 704/F2N 700
1.7	06.87 - 12.88	64	F2N 732/F2N 742
1.7	10.86 - 12.88	65	F2N 798/710/708
19 II (B/C53_) 1.7	04.92 - 12.95	54	F3N 741/F3N 740
19 II Chamade (L53_) 1.7	04.92 - 12.95	54	F3N 741/F3N 740
Clio I (B/C57_, 5/357_) 1.8	08.94 - 09.98	66	F3P 755 /F3P 754
Laguna I (B56_, 556_) 1.8	11.93 - 03.01	66	F3P 724
1.8	08.95 - 03.01	66	F3P 678
2.0	05.95 - 03.01	83	F3R 722/F3R 723
Laguna Grandtour 1.8	09.95 - 03.01	66	F3P 678
1.8	09.95 - 03.01	69	F3P 720/F3P 724
2.0	09.95 - 03.01	83	F3R 722/F3R 723

T841B K344 50 40 30 30 -

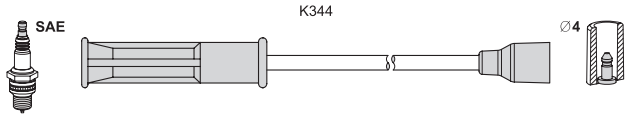

Renault Clio II 1.4	09.98 - 05.05	55	E7J 780
1.6	09.98 - 05.05	66	K7M 744/K7M 745
Megane I (BA0/1_) 1.6 e	07.98 - 03.99	66	K7M 702/703/790
1.6 i	07.98 - 03.99	55	K7M 720
Megane I Cabriolet 1.6 e	07.98 - 03.99	66	K7M 702/K7M 703
Megane I Classic 1.6 e	07.98 - 03.99	66	K7M 702/703/790
1.6 i	07.98 - 03.99	55	K7M 720
Megane I Coach 1.6 e	07.98 - 03.99	66	K7M 702/K7M 703
Megane Scenic 1.6 e	07.98 - 09.99	66	K7M 702/K7M 703
1.6 i	07.98 - 09.99	55	K7M 720

T842C K163 55 45 40 35 K090 40 alternative T006B

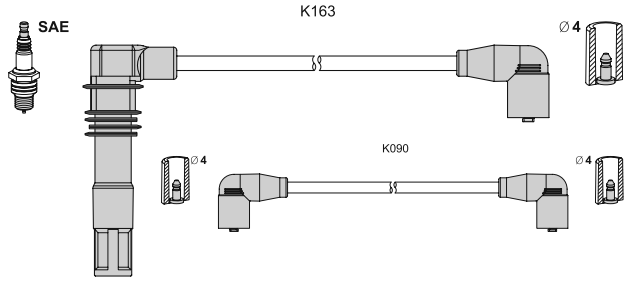

Seat Cordoba 1.4 i 16V	09.96 - 06.99	74	AFH
Ibiza II (6K1) 1.4 i 16V	06.97 - 08.99	74	AFH
VW Polo 100 (6N1) 1.4 i 16V	04.96 - 10.99	74	AFH

T843C K088 40 50 65 75 K091 60 alternative T066B

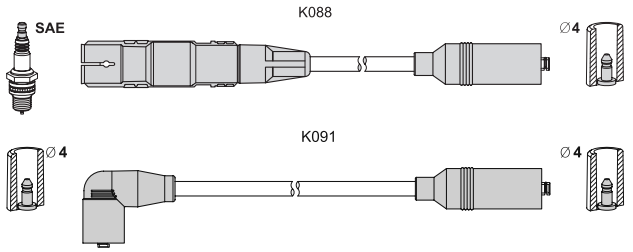

Seat Cordoba (6K2/C2) 1.6 i	07.96 - 10.99	74	AKL/AFT
Cordoba Vario (6K5) 1.6 i	09.96 - 06.99	74	AFT
Ibiza II (6K1) 1.6 i	04.96 - 08.99	74	AFT
Toledo I (1L) 1.6 i	11.96 - 03.99	74	AFT

T844B K012 50 60 70 70 K061 60

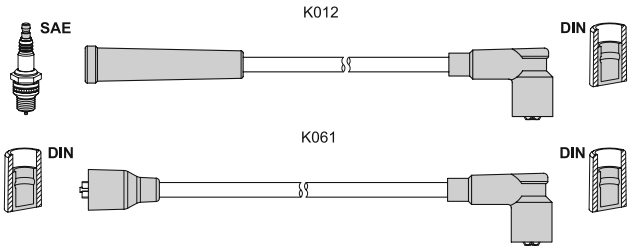

Suzuki Alto III (EF) 1.0	09.94 - 06.02	39	G10BB
1.0	01.00 - 06.02	43	G10BB
Swift Cabriolet (SF413) 1.3	09.91 - 10.96	50	G13BA
Swift II (EA, MA) 1.3	03.89 - 05.01	50	G13A
1.3	03.89 - 12.91	52	G13A
1.3 4WD	03.89 - 05.01	50	G13A
1.3 4WD	10.89 - 12.91	52	G13A
Swift II Sedan 1.3	03.89 - 12.91	52	G13A
1.3	03.89 - 05.01	50	G13A

T 845B ▶

T845B K229 55 45 40 25 -

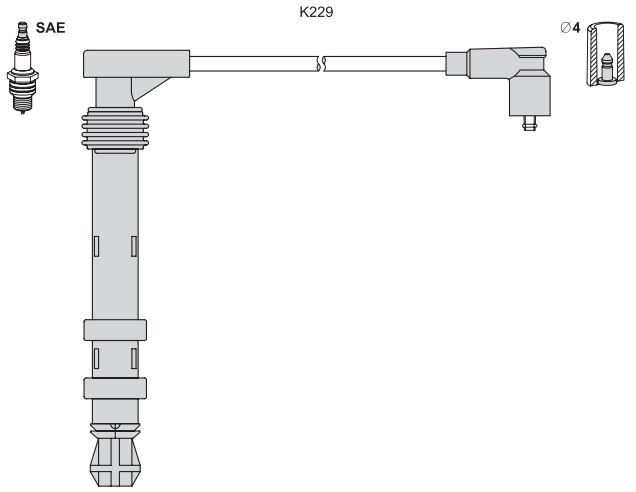

Fiat Brava (182) 1.6 16V	10.95 - 10.01	66	182 A6.000
1.6 16V	02.96 - 10.01	76	182 A4.000
Bravo (182) 1.6 16V	10.95 - 10.01	66	182 A6.000
1.6 16V	03.96 - 10.01	76	182 A4.000
Doblo (119) 1.6 16V	10.01 -	76	182 B6.000
1.6 Natural Power	09.02 -	76	182 B6.000
Doblo Cargo (223) 1.6 16V	10.01 -	76	182 B6.000
1.6 Natural Power	09.02 -	76	182 B6.000
Marea (185) 1.6 16V 100	09.96 - 05.02	76	182 A4.000
1.6 16V 100	04.97 - 02.99	75	185 A3.000
1.6 16V 100 Bipower	04.99 - 05.02	76	186 A4.000/185 A3._
Marea Weekend 1.6 16V	09.96 - 05.02	76	182 A4.000
Multipla (186) 1.6	09.00 - 06.10	76	182 B6.000
1.6 16V	04.02 - 06.10	70	182 B6.000
1.6 16V 100	04.99 - 06.10	76	182 A4.000
1.6 16V Blupower	04.99 - 06.10	70	186 A3.000
1.6 16V Bipower	04.99 - 06.10	76	186 A4.000
1.6 16V Bipower	10.01 - 06.10	76	182 B6.000
1.6 16V GPL	10.01 - 06.10	76	182 B6.000
Palio (178BX) 1.6 16V	04.96 -	74	178 B3.000
Palio Weekend 1.6 16V	04.96 - 02.01	74	178 B3.000
1.6 16V	02.01 -	76	182 B6.000
Siena (178_) 1.6 16V	09.98 -	78	178 B3.000
Lancia Dedra (835) 1.6 16V	01.96 - 07.99	76	182 A4.000
Dedra S.W. (835) 1.6 16V	01.96 - 07.99	76	182 A4.000
Delta II (836) 1.6 i.e.	03.96 - 08.99	66	182 A6.000
1.6 i.e. 16V	01.96 - 08.99	76	182 A4.000
Lybra (839AX) 1.6 16V	07.99 - 10.05	76	182 A4.000

T846B K124 65 60 45 40 -

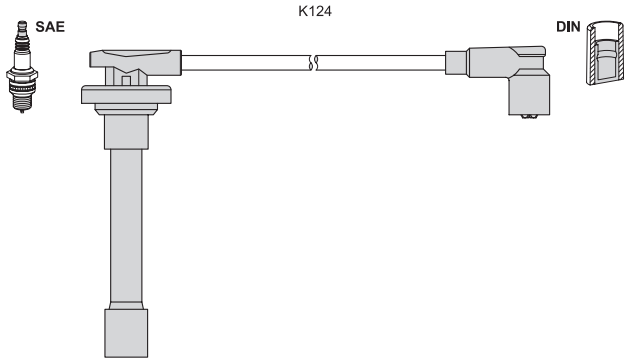

Honda Accord V (CC7) 2.3 i SR	03.93 - 01.96	116	H23A3
Civic IV Hatch. 1.6 i 16V	09.87 - 09.91	96	D16A7
Civic IV Sedan 1.6 i 16V	09.87 - 09.91	96	D16A7
Civic V Coupe 1.6 i Vtec	01.94 - 11.95	118	B16A2

< T846B

Honda Civic V Hatch. 1.6 VTi 16V	10.91 - 11.95	118	B16A2
Civic V Sedan 1.6 VTi	10.91 - 11.95	118	B16A2
Civic VI Coupe 1.6 i Vtec	04.99 - 12.00	118	B16A2
Civic VI Fastback 1.6 VTi	01.97 - 02.01	118	B16A2
Civic VI Hatchb. 1.6 VTi	11.95 - 02.01	118	B16A2
Civic VI Sedan 1.6 VTi	11.95 - 02.01	118	B16A2
CRX III (EH, EG) 1.6 i VTi	03.92 - 12.98	118	B16A2
Integra (DC2) 1.8 Type-R	11.97 - 10.01	140	B18C6
Prelude IV (BB) 2.3 i 16V	02.92 - 09.96	118	H23A2

T847B K125 65 60 45 40 -

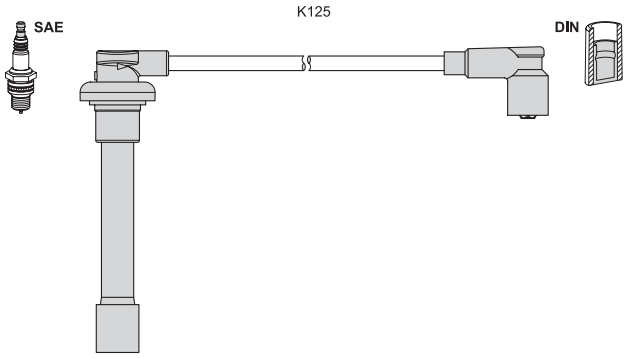

Honda Accord VI 2.2 i VTEC	02.96 - 10.98	110	F22Z2
Accord VII (CG) 2.0 i	10.98 - 01.01	108	F20B6
2.3	01.01 - 06.03	113	F23Z5/F23A1
Accord VII Hatchback 2.0 i	12.99 - 12.02	108	F20B6
Civic IV Hatchback 1.3	10.87 - 12.89	55	D13B1
Civic IV Sedan (ED) 1.3	10.87 - 12.89	55	D13B1
Civic IV Coupe 1.5 i LSi	01.94 - 11.95	74	D15B7
1.6 i	01.94 - 11.95	77	D16Y7
1.6 i Vtec	01.94 - 03.96	92	D16Z9
Civic V Hatchback 1.3 16V	10.91 - 11.95	55	D13B2
1.5 i 16V	10.91 - 11.95	66	D15B2/D15Z2
1.5 i 16V	10.91 - 11.95	69	D15B2
Civic V Sedan(EG, EH) 1.5	01.92 - 12.92	61	D15B2
1.5 i 16V	10.91 - 11.95	69	D15B2
Civic V Aerodeck 1.4 16V	04.98 - 02.01	55	D14A7
1.4 16V	04.98 - 02.01	66	D14A8
1.5 16V	04.98 - 02.01	84	D15Z8
1.6 16V	04.98 - 02.01	85	D16B2
1.8 16V	04.98 - 02.01	124	B18C4
Civic VI Coupe 1.6 i	03.96 - 03.00	77	D16Y7
1.6 i Vtec	03.96 - 03.00	92	D16Y8
Civic VI Fastback 1.4 i	09.94 - 01.97	66	D14A8/D14A2
1.4 i	09.95 - 02.01	55	D14A5/D14A7
1.5 16V	01.97 - 02.01	84	D15Z8
1.6 16V	01.97 - 02.01	85	D16B2
1.8 16V	01.97 - 02.01	124	B18C4
Civic VI Hatchback 1.4 i	11.95 - 02.01	55	D14A3
1.4 i S	11.95 - 02.01	66	D14A4/D14Z2
1.5 i	11.95 - 02.01	84	D15Z6
1.6 i	11.95 - 02.01	84	D16Y5
Civic VI Sedan (EJ, EK) 1.4	11.95 - 10.98	55	D14A4
1.4 i	11.95 - 02.01	66	D14A4/D14Z2
1.5 i	11.95 - 02.01	84	D15Z6
1.6 i Vtec	11.95 - 02.01	92	D16Y6/D16Y8
CRX II (ED, EE) 1.6 i 16V	10.87 - 02.92	91	D16Z5
CRX III (EH, EG) 1.6 ESi	03.92 - 12.98	92	D16Y8/D16Z6
HR-V (GH) 1.6 16V	03.99 -	77	D16W1
1.6 16V 4WD	03.99 -	77	D16W1
1.6 16V 4WD	10.99 -	91	D16W5
Logo (GA3) 1.3	03.99 - 03.02	48	D13B7

T848B K133 35 45 60 70 -

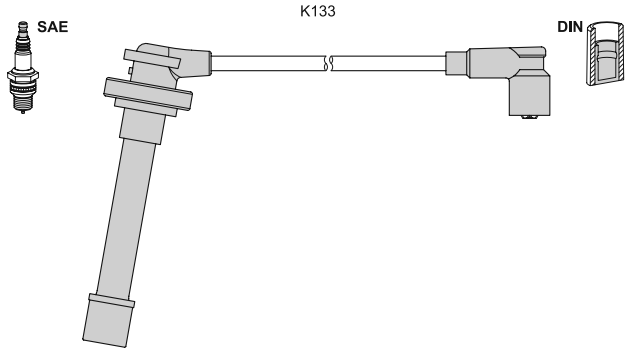

Nissan Almera I (N15) 1.4	09.95 - 07.00	64	GA14DE
1.4 GX,LX	09.95 - 07.00	55	GA14DE
1.6	09.95 - 07.00	73	GA16DE
1.6 SLX	09.95 - 07.00	66	GA16DE
Almera I Hatchback 1.4	09.95 - 03.00	64	GA14DE
1.4 S,GX,LX	09.95 - 03.00	55	GA14DE
1.6	09.95 - 03.00	73	GA16DE
1.6 SR,SLX	09.95 - 03.00	66	GA16DE
Primera (P10) 1.6	06.93 - 01.96	75	GA16DE
Primera (P11) 1.6 16V	09.96 - 12.01	66	GA16DE
1.6 16V	09.96 - 10.00	73	GA16DE
1.6 16V	06.96 - 09.00	78	QG16DE
Primera Hatch. (P10) 1.6	06.93 - 01.96	75	GA16DE
Primera Hatch. (P11) 1.6 16V	09.96 - 07.02	66	GA16DE
1.6 16V	09.96 - 07.02	73	GA16DE
1.6 16V	09.00 - 07.02	78	QG16DE
Primera Travel. (W10) 1.6 i	03.94 - 03.98	75	GA16DE
Primera Trav. (WP11) 1.6 16V	04.98 - 12.01	66	GA16DE
1.6 16V	04.98 - 12.01	73	GA16DE
Sunny III (N14) 1.4 i	10.90 - 05.95	55	GA14DE
1.4 i 16V	10.90 - 06.95	64	GA14DE
1.6 i 16V	10.92 - 05.95	75	GA16DE
Sunny III Hatchback 1.4 i	10.90 - 05.95	55	GA14DE
1.4 i 16V	10.90 - 05.95	64	GA14DE
Sunny III Liftback 1.4 i	10.90 - 05.95	55	GA14DE
1.4 i 16V	10.90 - 06.95	64	GA14DE
Sunny III Trav. 1.6 i 16V 4x4	10.92 - 03.00	75	GA16DE
Sunny Van (Y10) 1.6 i 16V	10.92 - 03.00	66	GA16DE

T849B K133 40 45 60 65 K062 35

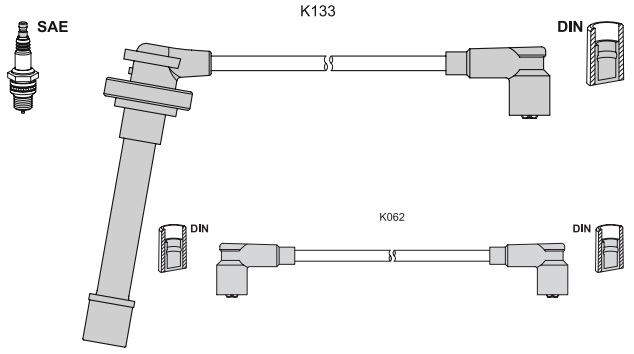

Nissan 100 NX (B13) 1.6	03.90 - 06.92	66	GA16DS
1.6 SR	09.93 - 10.94	75	GA16DE
Primera (P10) 1.6	06.90 - 01.96	66	GA16DS
Primera Hatch. (P10) 1.6	06.90 - 01.96	66	GA16DS
1.6	06.90 - 06.93	71	GA16DS
Primera Travel. (W10) 1.6 i	07.90 - 03.98	66	GA16DS
Sunny III (N14) 1.4 i	10.90 - 05.95	55	GA14DS
1.6 i	10.90 - 05.95	66	GA16DS
1.6 i 16V 4WD	10.90 - 05.95	66	GA16DS
Sunny III Hatch. (N14) 1.4	10.90 - 06.95	60	GA14DS

< T849B

Nissan Sunny III Hatch. (N14) 1.4 i	10.90 - 05.95	55	GA14DS
1.6 i	10.90 - 05.95	66	GA16DS
Sunny III Liftback 1.4 i	10.90 - 05.95	55	GA14DS
1.6 i	10.90 - 05.95	66	GA16DS
Sunny III Traveller 1.6 i	06.91 - 03.00	66	GA16DS
1.6 16V 4x4	11.90 - 05.95	66	GA16DS

T850B K175 60 60 110 110 K077 50

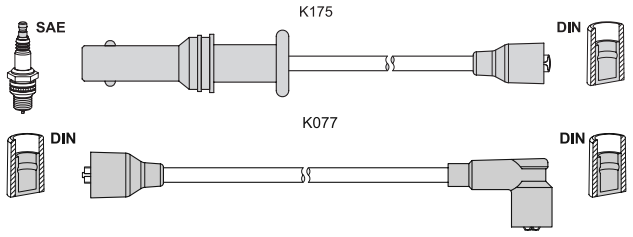

Subaru Legacy I (BC) 1.6	05.89 - 12.93	70	EJ16
1800 1.8	01.89 - 12.93	76	EJ18 SPI
1800 1.8 4WD	01.89 - 09.91	76	EJ18 SPI
Legacy I St. Wagon 1.6 GL	05.89 - 12.93	70	EJ16
1800 1.8	01.89 - 07.94	76	EJ18 SPI
1800 1.8 4WD	01.89 - 07.94	76	EJ18 SPI
Leone II 1.6	06.85 - 07.90	52	EA71
1600 1.6	11.84 - 09.91	55	EA71

T851B K031 50 40 30 K062 85

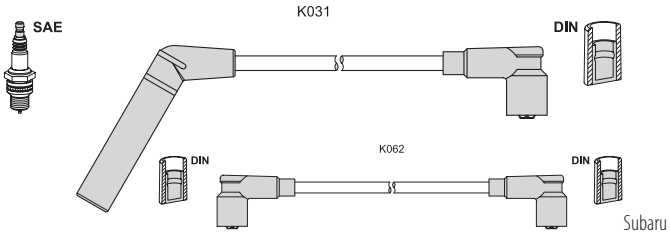

Libero Bus 1.0 4WD	01.83 - 12.87	37	EF10
1.2 4WD	08.86 - 02.00	38	EF12

T852B K031 50 40 30 K061 30

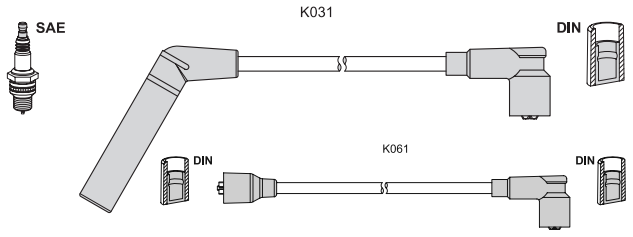

Subaru Libero Bus 1.2 i 4WD	08.91 - 02.00	40	EF12

T854C K098 70 65 50 30 - alternative T076B

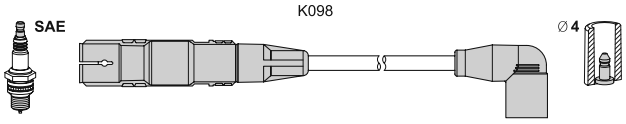

Audi A3 (8L1) 1.6	08.00 - 05.03	75	AVU/BFQ
1.6	05.03 - 08.12	75	BGU
A3 Sportback (8PA) 1.6	09.04 -	75	BGU
A4 (8D2, B5) 1.6	11.94 - 10.00	74	AHL/ANA
1.6	07.00 - 11.00	75	ALZ
A4 (8E2, B6) 1.6	11.00 - 12.04	75	ALZ
A4 (8EC) 1.6	11.04 - 06.08	75	ALZ
A4 Avant (8D5, B5) 1.6	11.94 - 09.01	74	AHL/ANA
1.6	07.00 - 09.01	75	ALZ

T 854C ▶

< T854C			
Audi A4 Avant (8E5, B6) 1.6	09.01 - 12.04	75	ALZ
A4 Avant (8ED) 1.6	11.04 - 06.08	75	ALZ
Seat Alhambra 2.0 i	04.96 - 03.10	85	ATM
Altea (5P1) 1.6	03.04 -	75	BGU/CCSA/BSE
1.6 LPG	09.09 -	75	CHGA
Altea XL (5P5) 1.6	10.06 -	75	CCSA/BSF/BSE
1.6 LPG	09.09 -	75	CHGA
Cordoba (6K2) 1.6	06.99 - 10.02	74	AKL/APF/AEH
Cordoba (6L2) 2.0	09.02 - 11.09	85	AZL/BBX
Cordoba Vario (6K5) 1.6	06.99 - 12.02	74	AKL/APF/AEH/AUR
Exeo (3R2) 1.6	03.09 - 09.10	75	ALZ
1.8 T	12.08 - 05.10	110	CFMA
Exeo ST (3R5) 1.6	06.09 - 09.10	75	ALZ
1.8 T	06.09 - 05.10	110	CFMA
Ibiza III (6K1) 1.6	08.99 - 02.02	74	AKL/APF/AEH/AUR
Ibiza IV (6L1) 2.0	04.02 - 11.09	85	AZL/BBX
Leon (1M1) 1.6	10.05 - 06.06	75	BGU/BFQ
Leon (1P1) 1.6	07.05 -	75	CCSA/BSF/BSE
1.6 LPG	12.09 -	75	CHGA
Toledo III (5P2) 1.6	10.04 - 05.09	75	BGU/BSF/BSE
Skoda Fabia (6Y2) 2.0	12.99 - 03.08	85	AZL
Fabia Combi (6Y5) 2.0	04.00 - 12.07	85	AZL
Fabia Sedan (6Y3) 2.0	12.99 - 12.07	85	AZL
Octavia (1U2) 1.6	11.00 - 12.10	75	AVU/BFQ
Octavia (1Z3) 1.6	06.04 -	75	BGU/CCSA/BSE
1.6 LPG	08.09 -	75	CHGA
1.6 MultiFuel	01.08 -	75	CCSA/CMXA
Octavia Combi (1U5) 1.6	09.00 - 12.10	75	AVU/BFQ
Octavia Combi (1Z5) 1.6	09.04 -	75	BGU/CCSA/BSE
1.6 LPG	08.09 -	75	CHGA
1.6 MultiFuel	01.08 -	75	CCSA/CMXA
Superb (3U4) 2.0	12.01 - 03.08	85	AZM
VW Bora (1J2) 1.6	08.00 - 05.05	75	AVU/BFQ
Bora Combi (1J6) 1.6	08.00 - 05.05	75	AVU/BFQ
Caddy III Combi 1.6	04.04 -	75	BGU/BSF/BSE
1.6 BiFuel	05.11 -	75	CHGA
Caddy III Van 1.6	04.04 -	75	BGU/BSF/BSE
1.6 BiFuel	05.11 -	75	CHGA
Golf IV (1J1) 1.6	08.97 - 05.04	74	AKL/APF/AEH
1.6	08.00 - 06.05	75	AVU/BFQ
Golf IV Variant (1J5) 1.6	05.99 - 04.02	74	AKL/APF/AEH
1.6	08.00 - 06.06	75	AVU/BFQ
Golf V (1K1) 1.6	01.04 - 11.08	75	BGU/BSF/BSE
Golf V Variant 1.6	06.07 -	75	CCSA/BSF/BSE
1.6	10.08 - 11.12	75	CCSA/BSF/BSE
1.6 BiFuel	03.09 - 11.12	75	CHGA
1.6 MultiFuel	10.08 - 11.12	75	CCSA/CMXA
Golf Plus (5M1) 1.6	05.05 -	75	CCSA/BSF/BSE
1.6 BiFuel	05.09 -	75	CHGA
1.6 MultiFuel	11.07 -	75	CCSA/CMXA
Jetta III (1K2) 1.6	10.05 - 10.10	75	BSF/BSE
1.6 MultiFuel	01.08 - 10.10	75	CCSA
Multivan V (7HM, 7HF) 2.0	11.03 -	85	AXA
New Beetle (9C1, 1C1) 1.6	06.00 -	75	AYD/BFS
New Beetle Cabriolet 1.6	01.03 - 09.10	75	BFS
Passat (3B2) 1.6	10.96 - 11.00	74	AHL/ARM/ANA
Passat (3B3) 1.6	11.00 - 05.05	75	ALZ
2.0	11.00 - 05.05	85	AZM
2.0 4motion	11.00 - 05.05	85	AZM
Passat (3C2) 1.6	05.05 - 07.10	75	BSF/BSE
Passat Variant (3B5) 1.6	06.97 - 11.00	74	AHL/ARM/ANA
Passat Variant (3B6) 1.6	11.00 - 05.05	75	ALZ
2.0	11.00 - 05.05	85	AZM
2.0 4motion	11.00 - 05.05	85	AZM
Passat Variant (3C5) 1.6	08.05 - 11.10	75	BSF/BSE
Sharan (7M_) 2.0	09.95 - 03.10	85	ADY

< T854C			
VW Touran (1T1, 1T2) 1.6	07.03 - 05.10	75	BGU/BSF/BSE
Transporter V Bus (7_) 2.0	11.03 -	85	AXA
Transporter V Flatbed 2.0	11.03 -	85	AXA
Transporter V Van (7_) 2.0	11.03 -	85	AXA

T855C K098 65 60 45 25 - alternative T077B

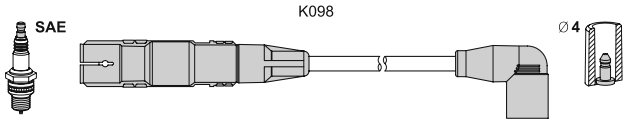

Audi A3 Cabriolet (8P7) 1.6	09.08 -	75	BSE
Skoda Octavia (1U2) 2.0	04.99 - 05.07	85	APK/AZH/AZJ/AQY
Octavia Combi (1U5) 2.0	04.99 - 05.07	85	APK/AZH/AZJ/AQY
2.0 4x4	01.00 - 12.10	88	ATF
VW Bora (1J2) 2.0	10.98 - 05.05	85	APK/AZH/AQY
2.0 4motion	04.00 - 05.05	85	AZH
Bora Combi (1J6) 2.0	05.99 - 05.05	85	APK/AZH/AQY
2.0 4motion	04.00 - 05.05	85	AZH
Golf IV (1J1) 2.0	07.98 - 05.04	85	APK/AQY
2.0 4motion	10.00 - 06.05	85	AZH
Golf IV Variant (1J5) 2.0	05.99 - 06.06	85	APK/AQY
2.0 4motion	10.00 - 06.06	85	AZH
New Beetle (9C1, 1C1) 1.6	10.99 - 09.00	74	AWH
2.0	01.98 -	85	AVH
Sharan (7M8, 7M9) 2.0 LPG	04.06 - 03.10	85	ATM

T856C K098 80 65 45 30 - alternative T078B

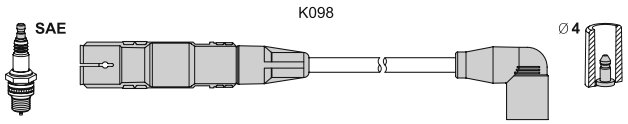

Skoda Octavia Combi (1U5) 2.0 4x4	08.00 - 09.04	85	AZJ
VW Bora (1J2) 2.0	10.98 - 05.05	85	AZJ/AZG
2.0 4motion	04.00 - 05.05	85	AZJ
Bora Combi (1J6) 2.0	05.99 - 05.05	85	AZJ/AZG
2.0 4motion	04.00 - 05.05	85	AZJ
Caddy III Combi 2.0 EcoFuel	04.06 -	80	BSX
Caddy III Van 2.0 EcoFuel	04.06 -	80	BSX
Golf IV (1J1) 2.0	07.98 - 05.04	85	AZJ/AZG
2.0 4motion	10.00 - 06.05	85	AZJ
Golf IV Variant (1J5) 2.0	05.99 - 06.06	85	AZJ
2.0 4motion	10.00 - 06.06	85	AZJ
2.0 Bi-Fuel	02.02 - 06.06	85	BEH
Jetta IV (162) 2.0	06.10 -	85	CKJA/CBPA
New Beetle (9C1, 1C1) 2.0	01.98 -	85	AZG
New Beetle Cabriolet 2.0	09.02 - 10.10	85	AZJ
Touran (1T_) 2.0 EcoFuel	02.06 - 05.09	80	BSX

T857C K098 85 70 65 60 - alternative T079B

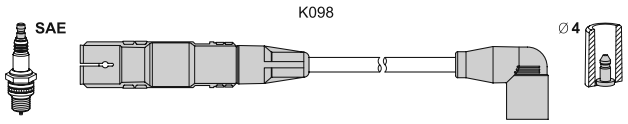

Seat Arosa (6H) 1.0	05.97 - 06.04	37	ANV
1.4	05.97 - 06.04	44	ANW
VW Polo (6N2) 1.0	10.99 - 09.01	37	ALD/AUC
1.4	10.99 - 09.01	40	ANX/AKP
Polo Variant (6KV5) 1.4	12.98 - 09.01	40	AKP

T858B K378 30 45 45 60 K316 50

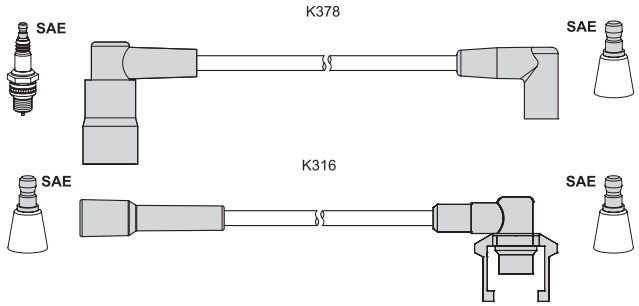

Renault 19 I (B/C53_) 1.7	06.89 - 04.92	79	F3N 746
19 I Chamade (L53_) 1.7	08.88 - 12.92	79	F3N 746
19 II (B/C53_) 1.7	04.92 - 12.95	66	F3N 743
19 II Cabriolet 1.7	04.92 - 09.93	66	F3N 743
19 II Chamade (L53_) 1.7	04.92 - 12.95	66	F3N 743
Volvo 440 K (445) 1.6	09.88 - 12.96	61	B 16 F
1.7	09.88 - 12.96	64	B 18 KP
1.7	08.88 - 07.89	70	B 18 F
1.7	08.89 - 12.96	75	B 18 FP
1.7	09.88 - 12.96	78	B 18 EP
1.8	08.91 - 07.96	66	B 18 U
1.8	09.95 - 12.96	66	B 18 U
2.0	08.92 - 07.95	81	B 20 F
2.0	08.93 - 07.96	80	B 20 F
460 L (464) 1.6	07.92 - 07.96	61	B 16 F
1.7	09.88 - 07.96	64	B 18 KP
1.7	08.89 - 07.92	75	B 18 EP
1.8	08.91 - 07.96	66	B 18 U
2.0	08.92 - 07.95	81	B 20 F
2.0	08.93 - 07.96	80	B 20 F
480 E 1.7	08.87 - 07.89	70	B 18 F
1.7	08.89 - 07.96	75	B 18 EP
1.7	04.86 - 07.89	78	B 18 E
1.7	08.86 - 07.88	80	B 18 E
2.0	08.92 - 09.95	81	B 20 F

T859H K141 37 31 23 37 -

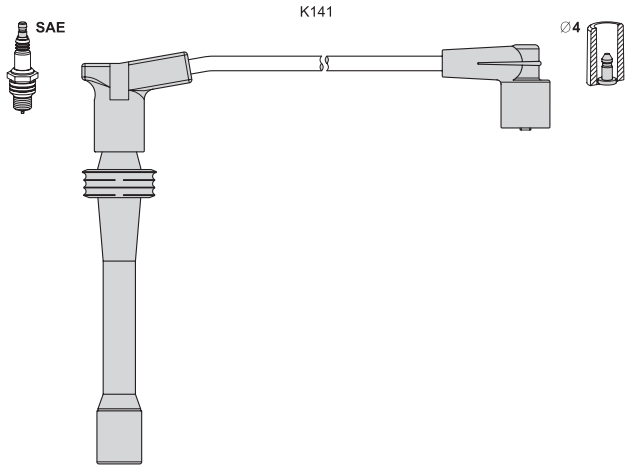

application → T774S

T860M K012 30 35 40 45 K077 40

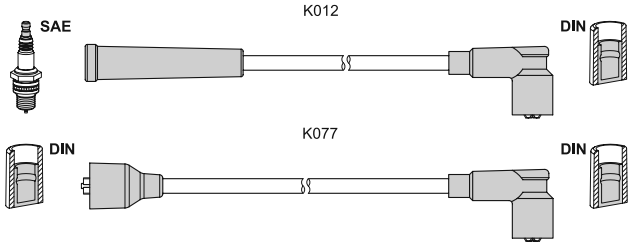

application → T367S

T862B K038 55 45 40 35 -

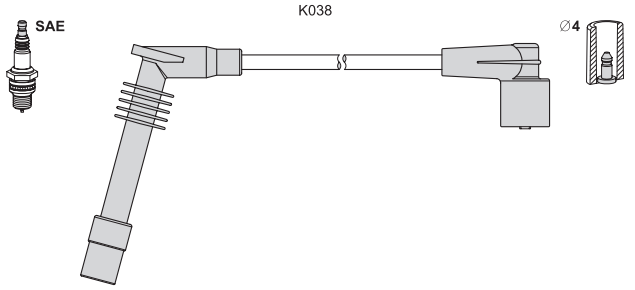

Opel/Vauxhall Combo Tour 1.6	10.01 -	64	Z 16 SE
Combo Van/Combi 1.6	10.01 -	64	Z 16 SE
Omega B 2.0	03.94 - 09.99	85	X 20 SE
2.0	03.94 - 12.00	85	20 SE
Omega B Caravan 2.0	03.94 - 09.99	85	X 20 SE
Vectra B (36_) 2.0 i	10.95 - 04.02	82	20 NEJ
Vectra B Caravan 2.0 i	11.96 - 02.02	82	20 NEJ
Vectra B CC (38_) 2.0 i	10.95 - 02.02	82	20 NEJ

T865C K081 35 50 55 70 K090 35 alternative T055B

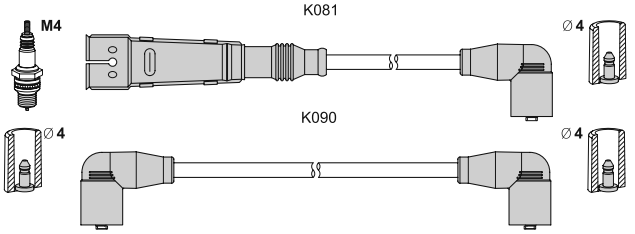

Seat Cordoba (6K2) 1.6	06.99 - 10.02	55	ALM
Cordoba Vario (6K5) 1.6	06.99 - 12.02	55	ALM
Ibiza III (6K1) 1.6	08.99 - 02.02	55	ALM
VW Caddy II Combi (9K9B) 1.4	11.95 - 01.04	44	AEX/AKV/APQ
Caddy II Van (9K9A) 1.4	11.95 - 01.04	44	AEX/APQ
Lupo (6X1, 6E1) 1.0	09.98 - 07.05	37	AER/ALL
Polo 60 (6N1) 1.4	07.95 - 10.99	44	AKV
Polo Classic 60 (6KV2) 1.4	12.95 - 09.01	44	AKV
Polo Variant (6KV5) 1.4	05.97 - 09.01	44	AKV

T867S K023 45 40 40 50 -

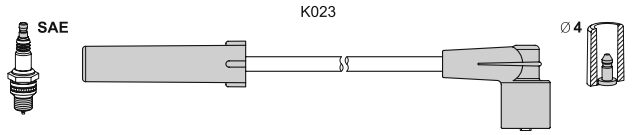

Lada 2104 1.7i 8V MPI	02 - 09.12	59	VAZ 21073
2107 Lada 1.7i 8V MPI	02 - 04.12	59	VAZ 21073
2120 Nadezhda 1.7i 8V MPI	99 - 08.06	59	VAZ 21214
2121 Niva 1.7i 8V MPI	99 - 12.02	60	VAZ 21214
21214 Niva 1.7i 8V MPI	99 - 12.02	60	VAZ 21214
2123 Niva 2 1.7i 8V MPI	00 - 09.02	60	VAZ 2123

T 867S ▶

< T867S			
Lada 2123 Niva 1.7i 8V	09.02 -	60	VAZ 21214
2131 Niva 1.7i 8V MPI	99 - 12.02	60	VAZ 21214
2329 Niva Pick Up 1.7i 8V MPI	00 - 02	60	VAZ 21214
Chevrolet Niva 1.7i 8V MPI	09.02 -	59	VAZ 2123 i
Lada 4x4 3D 1.7i 8V MPI	01.03 -	60	VAZ 21214
Lada 4x4 5D 1.7i 8V MPI	01.03 -	60	VAZ 21214
Lada 4x4 M 1.7i 8V MPI	01.12 -	60	VAZ 21214
Lada 4x4 M 1.7i 8V Urban	10.14 -	60	VAZ 21214

T868B K145 63 50 43 35 -

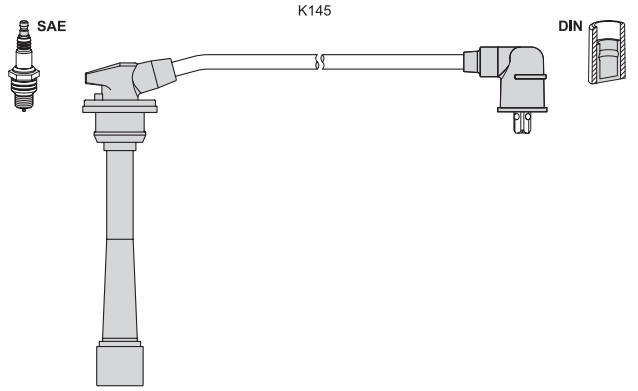

Hyundai Coupe (RD) 1.6 16V	03.98 - 06.00	85	G4GR
1.6 i 16V	12.96 - 06.00	84	4G61
2.0 16V	08.96 - 04.02	102	G4GF
Lantra II (J-2) 1.6 16V	11.95 - 09.00	84	4G61
1.6 i	11.95 - 09.00	66	G4GR
1.8 16V	11.95 - 09.00	94	G4GM
2.0 16V	08.96 - 09.00	102	G4GF
Lantra II Wagon 1.6 16V	02.96 - 10.00	84	4G61
1.6 i	02.96 - 10.00	66	G4GR
1.8 16V	02.96 - 10.00	94	G4GM
2.0 16V	12.96 - 10.00	102	G4GF
Sonata V 2.0 16V Beta (RUS)	04.04 -	102	G4GC

T869C K128 35 55 60 35 45 65 - alternative T073B

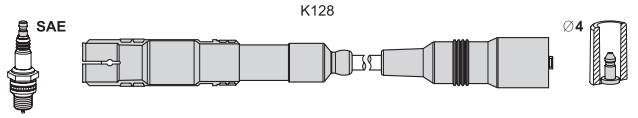

Audi 80 (8C, B4) 2.6	07.92 - 12.94	110	ABC
2.6 quattro	06.92 - 12.94	110	ABC
2.8	09.91 - 12.94	128	AAH
2.8 quattro	09.91 - 12.94	128	AAH
80 Avant (8C, B4) 2.6	07.92 - 01.96	110	ABC
2.6 quattro	07.92 - 07.95	110	ABC
2.8	09.91 - 01.96	128	AAH
2.8 quattro	08.92 - 07.95	128	AAH
100 (4A, C4) 2.6	07.93 - 06.94	102	ACZ
2.6 E quattro	08.93 - 07.94	102	ACZ
2.6	03.92 - 06.94	110	ABC
2.6 quattro	04.92 - 06.94	110	ABC
2.8 E	12.90 - 06.94	128	AAH
2.8 E quattro	12.90 - 06.94	128	AAH
100 Avant (4A, C4) 2.6	07.93 - 06.94	102	ACZ
2.6 E quattro	08.93 - 07.94	102	ACZ
2.6	03.92 - 06.94	110	ABC
2.6 quattro	07.92 - 06.94	110	ABC
2.8 E	09.91 - 06.94	128	AAH
2.8 E quattro	09.91 - 06.94	128	AAH
A4 (8D2, B5) 2.8	09.95 - 07.97	128	AAH
2.8 quattro	01.95 - 07.97	128	AAH

< T869C			
Audi A4 Avant (8D5, B5) 2.8	03.96 - 09.96	128	AAH
2.8 quattro	01.96 - 09.96	128	AAH
A6 (4A, C4) 2.6	06.94 - 10.97	110	ABC
2.6 quattro	06.94 - 10.97	110	ABC
2.8	06.94 - 10.97	128	AAH
2.8 quattro	06.94 - 10.97	128	AAH
A6 Avant (4A, C4) 2.6	06.94 - 12.97	110	ABC
2.6 quattro	06.94 - 12.97	110	ABC
2.8	06.94 - 12.97	128	AAH
2.8 quattro	06.94 - 12.97	128	AAH
A8 (4D2, 4D8) 2.8	03.94 - 03.96	128	AAH
2.8 quattro	03.94 - 03.96	128	AAH
2.8	07.95 - 03.96	120	AEJ
2.8 quattro	07.95 - 03.96	120	AEJ
Cabriolet (8G7, B4) 2.6	06.93 - 08.00	110	ABC
2.8	11.92 - 08.00	128	AAH
Coupe (89, 8B) 2.6	08.92 - 12.96	110	ABC
2.6 quattro	08.92 - 12.96	110	ABC
2.8	09.91 - 12.96	128	AAH
2.8 quattro	08.91 - 12.96	128	AAH

T870B K038 35 55 K164 35 55 K066 30

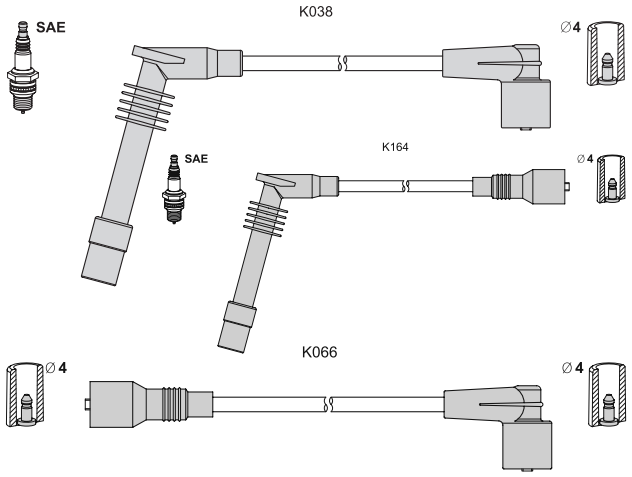

Opel/Vauxhall Calibra A 2.0 i	06.90 - 07.97	85	C 20 NE
2.0 i 4x4	06.90 - 07.97	85	C 20 NE
Vectra A (86_, 87_) 1.6	08.92 - 07.93	51	C 16 LZ2
1.6 i	09.93 - 11.95	55	16 LZ2
1.8 i cat	03.90 - 11.95	66	C 18 NZ
1.8 S	09.88 - 07.89	65	E 18 NVR
1.8 S	09.89 - 10.90	66	18 SV
1.8 S 4x4	01.89 - 07.89	65	E 18 NVR
2.0 i cat	09.88 - 11.95	85	C 20 NE
2.0 i 4x4 cat	01.89 - 11.95	85	C 20 NE
Vectra A CC 1.6 i	09.93 - 11.95	55	16 LZ2
1.6 i cat	09.88 - 11.95	55	C 16 NZ2
1.8 i	09.88 - 10.90	66	18 SV
1.8 i cat	03.90 - 11.95	66	C 18 NZ
1.8 S	09.88 - 07.89	65	E 18 NVR
2.0 i cat	09.88 - 11.95	85	C 20 NE
Vectra B (36_) 1.6 i	10.95 - 04.02	55	16 LZ2
Vectra B Caravan 1.6 i	11.96 - 06.00	55	16 LZ2
Vectra B CC (38_) 1.6 i	10.95 - 07.03	55	16 LZ2

T871B K146 90 70 65 K147 65 50 55 -

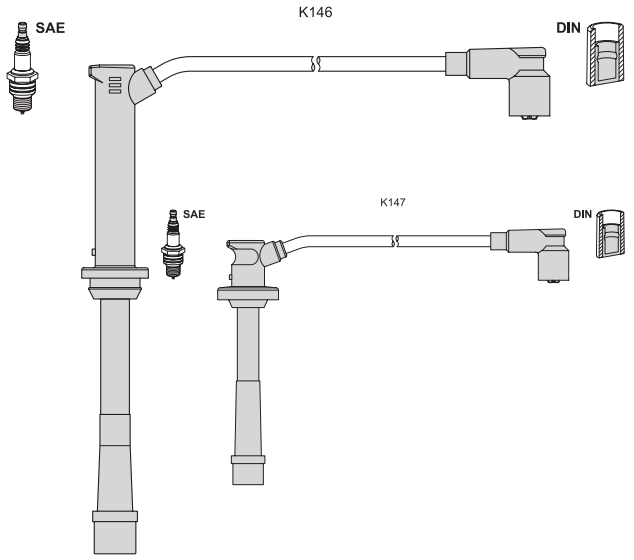

Mazda MX-3 (EC) 1.8 i V6	01.92 - 01.94	98	K819
1.8 i V6	01.94 -	95	K838

T872B K146 105 110 120 K147 65 50 50 -

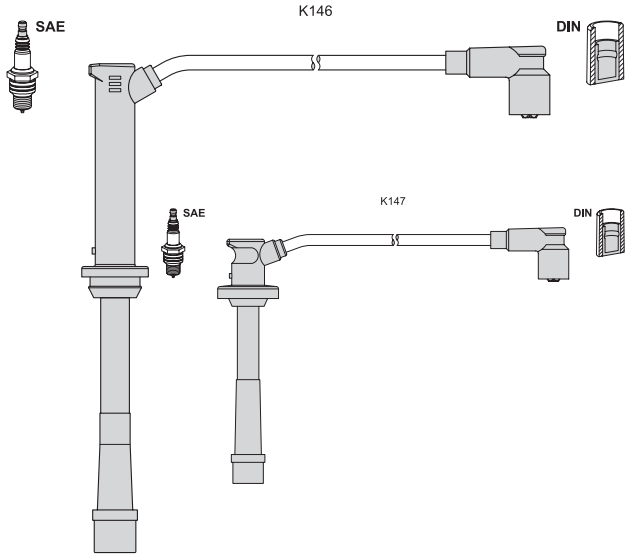

Ford Probe II (ECP) 2.5 V6 24V	10.93 - 03.98	119	KL
2.5 V6 24V	12.94 - 03.98	120	KL
Mazda 626 IV Hatch. 2.5 24V	01.92 - 04.97	121	KL
2.5 24V	08.94 - 04.97	120	KL
MX-6 (GE) 2.5 24V	02.92 - 02.97	121	KL
2.5 i 24V	08.94 - 02.97	120	KL
Xedos 9 (TA) 2.0 24V	08.93 - 01.00	105	KF
2.3 24V	02.95 - 01.00	155	KJ -ZEM
2.5 24V	07.93 - 07.00	123	KL

T873B K146 105 105 125 K147 65 45 50 K492 60

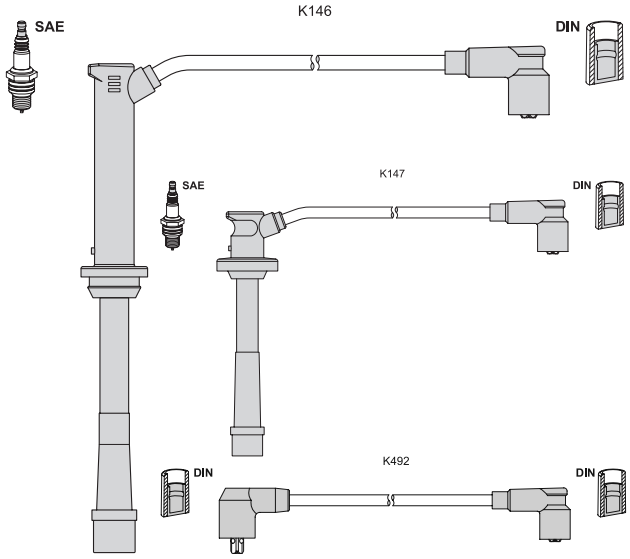

Mazda 323 F V (BA) 2.0 24V	08.94 - 09.98	106	KF
Xedos 6 (CA) 2.0 V6	01.92 - 05.94	106	KF1
2.0 V6	06.94 - 10.99	103	KF1

T874C K148 50 45 35 30 - alternative T004B

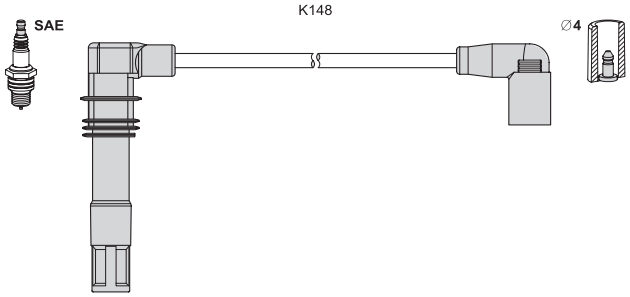

Audi A2 (8Z0) 1.4	02.00 - 08.05	55	AUA
Seat Arosa (6H) 1.4 16V	01.00 - 06.04	74	AFK/AUB/AQQ
Cordoba (6K2) 1.4 16V	05.00 - 10.02	55	APE/AUA
1.4 16V	02.00 - 10.02	74	AUB/AQQ
Cordoba Vario 1.4 16V	06.99 - 12.02	55	APE/AUA
Ibiza III (6K1) 1.4 16V	05.00 - 02.02	55	APE/AUA
1.4 16V	08.99 - 02.02	74	AUB/AQQ
Ibiza IV (6L1) 1.4 16V	02.02 - 11.09	74	AUB
Inca (6K9) 1.4 16V	04.00 - 06.03	55	AUA
Leon (1M1) 1.4 16V	11.99 - 06.06	55	AHW/AXP/APE
1.6 16V	09.00 - 06.06	77	AUS
Toledo II (1M2) 1.4 16V	07.99 - 05.06	55	AHW/AXP
1.6 16V	09.00 - 05.06	77	AUS
Skoda Fabia (6Y2) 1.4 16V	12.99 - 03.08	55	AUA
1.4 16V	12.99 - 03.08	74	AUB
Fabia Combi (6Y5) 1.4 16V	05.00 - 12.07	55	AUA
1.4 16V	04.00 - 12.07	74	AUB
Fabia Sedan (6Y3) 1.4 16V	10.99 - 12.07	55	AUA
1.4 16V	12.99 - 12.07	74	AUB
Octavia (1U2) 1.4 16V	09.00 - 12.10	55	AXP/BCA
Octavia Combi 1.4 16V	08.00 - 12.10	55	AXP/BCA
VW Bora (1J2) 1.4 16V	03.00 - 05.05	55	AHW/AXP/APE/AKQ
1.6 16V	05.00 - 05.05	77	AUS/ATN
Bora Combi (1J6) 1.4 16V	09.01 - 05.05	55	AHW/AXP
1.6 16V	02.00 - 05.05	77	AUS/ATN
Caddy II Combi 1.4 16V	08.00 - 01.04	55	AUA
Caddy II Van (9K9A) 1.4	08.00 - 01.04	55	AUA
Golf IV (1J1) 1.4 16V	08.97 - 06.05	55	AHW/AXP/APE/AKQ
1.6 16V	02.00 - 06.05	77	AUS/ATN

T 874C ▶

< T874C			
VW Golf IV Cabrio (1E7) 2.0	06.98 - 06.02	85	ATU
Golf IV Variant 1.4 16V	05.99 - 06.06	55	AHW/AXP/APE/AKQ
1.6 16V	02.00 - 06.06	77	AUS/ATN
Lupo (6X1, 6E1) 1.4 16V	09.98 - 07.05	55	AHW/APE/AKQ/AUA
1.4 16V	08.99 - 07.05	74	AFK/AUB/AQQ
1.6 GTI	09.00 - 07.05	92	AVY
Polo 120 (6N1) 1.6 16V GTI	09.98 - 10.99	88	AJV
Polo (6N2) 1.4 16V	10.99 - 09.01	55	AHW/APE/AUA
1.4 16V	10.99 - 09.01	74	AFK/AUB/AQQ
1.6 16V GTI	10.99 - 09.01	92	AVY
Polo (9N_) 1.4 16V	10.01 - 05.08	55	BBY/BKY/AUA
Polo Classic 75 1.4 16V	10.99 - 09.01	55	APE/AUA
Polo Variant 1.4 16V	10.99 - 09.01	55	APE/AUA

T876C K119 50 55 60 70 - alternative T014B

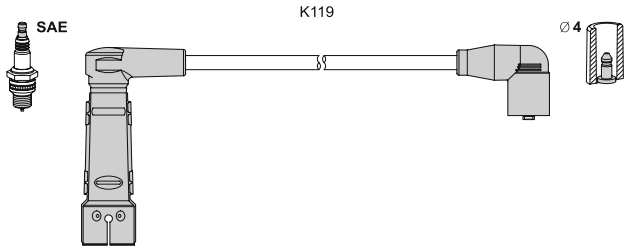

Alfa Romeo 145 (930) 1.6 i.e.	10.94 - 12.96	76	AR 33201
146 (930) 1.6 i.e.	12.94 - 12.96	76	AR 33201

T877C K120 70 70 55 45 K349 55 alternative T015B

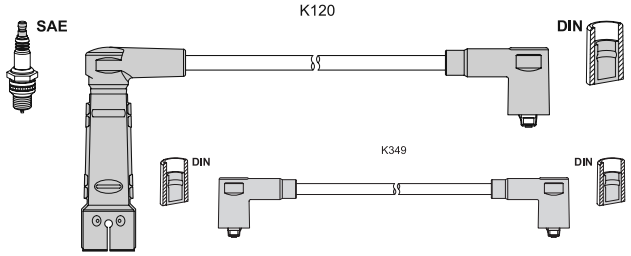

Alfa Romeo 33 (905) 1.7 i.e.	09.88 - 12.89	77	AR 30558
33 (907A) 1.4 i.e.	06.91 - 09.94	65	AR 30755
1.4 i.e.	06.91 - 09.94	66	AR 30755
1.5	01.90 - 04.93	77	AR 30734
1.5 i.e	01.90 - 09.94	71	AR 30751
1.7 i.e.	01.90 - 03.92	79	AR 30737
1.7 i.e.	04.92 - 09.94	77	AR 30737 A
1.7 i.e. 4x4	01.90 - 03.92	79	AR 30737
33 Sportwag. (905A) 1.7 i.e.	09.88 - 12.89	77	AR 30558
1.7 i.e. 4x4	09.88 - 12.89	77	AR 30558/AR 30737
33 Sport Wagon 1.4 i.e.	06.91 - 09.94	65	AR 30755/AR 30753
1.4 i.e.	06.91 - 09.94	66	AR 30755
1.5 i.e	01.90 - 09.94	71	AR 30751
1.7 i.e.	01.90 - 03.92	79	AR 30737
1.7 i.e.	04.92 - 09.94	77	AR 30737
1.7 i.e. 4x4	01.90 - 03.92	79	AR 30737

T878B K262 70 70 80 80 K062 65

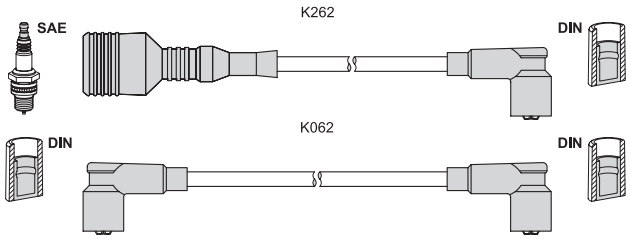

< T878B			
Alfa Romeo 33 (905) 1.2	06.83 - 12.89	50	AR 30585
1.3	06.83 - 12.89	55	AR 30586/AR 30502
1.3	05.83 - 12.89	58	AR 30502
1.3	10.84 - 12.89	63	AR 30168/AR 30587
1.3 i.e.	05.83 - 12.89	66	AR 30168
1.5	06.83 - 12.86	66	AR 30520
1.5	07.86 - 12.89	75	AR 30588
1.5 4x4	01.85 - 09.86	66	AR 30520
1.5 4x4	07.86 - 12.89	75	AR 30588
1.5 4x4	09.86 - 12.89	77	AR 30588/AR 30146
33 (907A) 1.5 i.e.	07.90 - 08.91	74	AR 30750
33 Sportwagon (905A) 1.5	09.84 - 12.86	66	AR 30520
1.5 4x4	12.86 - 12.89	75	AR 30588
1.5 4x4	09.84 - 12.86	66	AR 30520

T879B K365 68 64 52 56 -

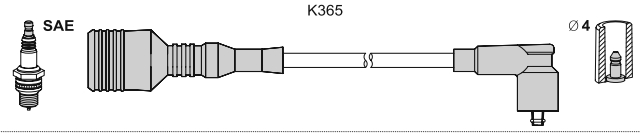

Alfa Romeo 145 (930) 1.6 i.e.	10.94 - 12.96	76	AR 33201
146 (930) 1.6 i.e.	12.94 - 12.96	76	AR 33201

T880C K118 55 40 30 25 K090 30 alternative T012B

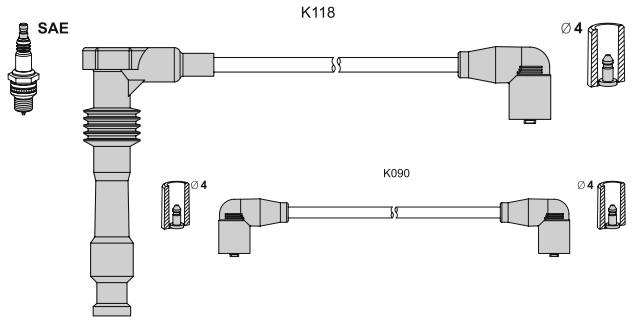

Opel/Vauxhall Calibra A 2.0 i 16V	06.90 - 02.94	110	C 20 XE
2.0 i 16V 4x4	06.90 - 02.94	110	C 20 XE
Vectra A 2.0 GT 16V cat	02.90 - 11.95	110	C 20 XE
Vectra A CC 2.0 i 16V	02.89 - 10.90	110	20 XEJ
2.0 i 16V cat	02.90 - 11.95	110	C 20 XE

T881C K117 60 50 40 30 K093 40 alternative T011B

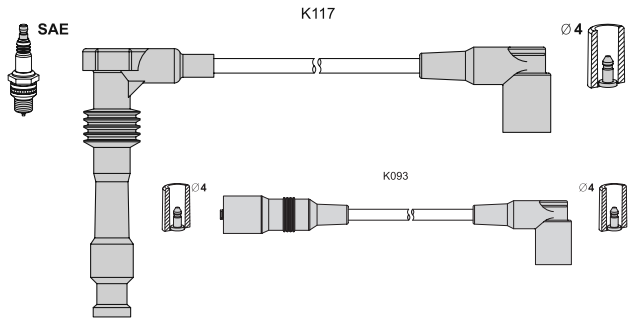

Opel/Vauxhall Astra F CC 2.0 GSI 16V	09.91 - 01.98	110	C 20 XE
Astra F Caravan 2.0 i 16V	03.93 - 01.98	110	C 20 XE
Calibra A 2.0 i Turbo 4x4	03.92 - 07.97	150	C 20 LET
Kadett E CC 2.0 GSI 16V	03.88 - 08.91	110	20 XEJ
2.0 GSI 16V	12.87 - 08.91	115	20 XE
2.0 GSI 16V cat	03.88 - 08.91	110	C 20 XE
Vectra A 2.0 16V 4x4	01.89 - 10.90	110	20 XEJ
2.0 i Turbo 4x4	06.94 - 11.95	150	C 20 LET
2.0 GT 16V	01.89 - 06.94	110	20 XEJ
2.0 GT 16V 4x4 cat	02.90 - 11.95	110	C 20 XE

T882B K037 90 90 65 K010-35 K060 40

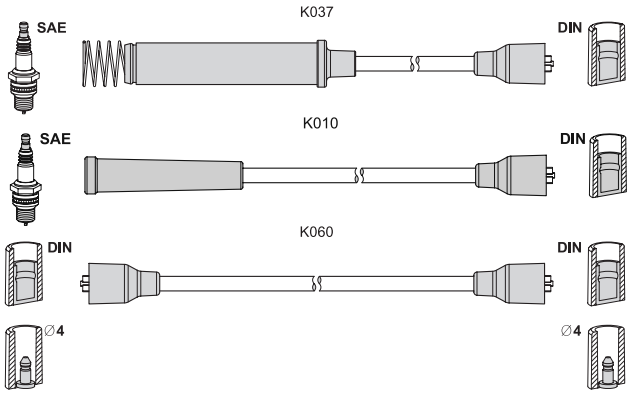

Opel/Vauxhall Vectra A 1.8 S	09.88 - 07.89	65	E 18 NVR
1.8 S 4x4	01.89 - 07.89	65	E 18 NVR
2.0 i	09.88 - 10.90	85	20 NE
2.0 i cat	09.88 - 11.95	85	C 20 NE
2.0 i 4x4	01.89 - 10.90	85	20 NE
2.0 i 4x4 cat	01.89 - 11.95	85	C 20 NE
Vectra A CC 1.8 S	09.88 - 07.89	65	E 18 NVR
2.0 i	09.88 - 10.90	85	20 NE
2.0 i cat	09.88 - 11.95	85	C 20 NE

T883B K037 90 90 65 55 K060 40

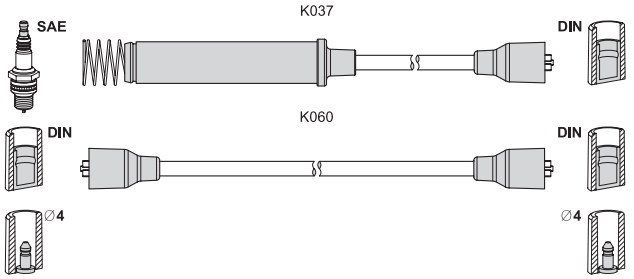

Opel/Vauxhall Vectra A 2.0 i	09.88 - 06.90	95	20 SEH
2.0 i 4x4	09.88 - 06.90	95	20 SEH
Vectra A CC 2.0 i GT	09.88 - 06.90	95	20 SEH

T886C K086 50 55 60 75 85 90 K093 90 alternative T033B

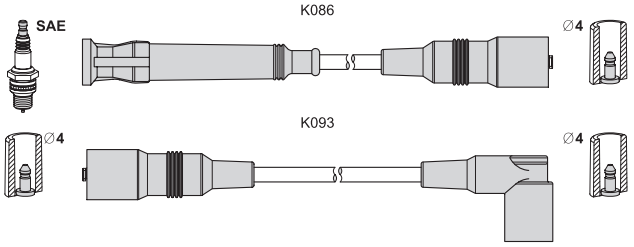

application → T175C

T887C K099 45 45 50 45 50 50 - alternative T003B

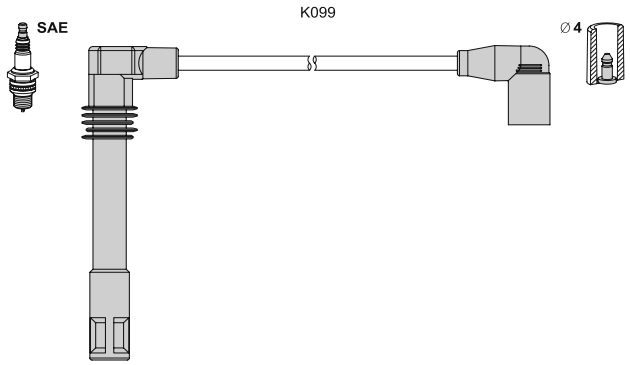

Audi A4 (8D2, B5) 2.4	08.97 - 11.00	120	AMM/APZ/AJG
2.4 quattro	08.97 - 11.00	120	APZ
2.4	03.97 - 11.00	121	AML/ARJ/ALF/APS
2.4 quattro	03.97 - 11.00	121	AML/ARJ/ALF/APS
2.6	01.95 - 11.00	110	ABC
2.6 quattro	01.95 - 11.00	110	ABC
2.8	10.96 - 11.00	142	APR/ACK/AQD/AMX
2.8 quattro	10.96 - 08.01	142	APR/ACK/AQD/AMX
A4 (8E2, B6) 2.4	09.01 - 12.04	120	AMM
2.4	09.01 - 12.04	125	BDV
A4 Avant (8D5, B5) 2.4	03.97 - 09.01	121	AML/ARJ/ALF/APS
2.4 quattro	03.97 - 09.01	121	AML/ARJ/ALF/APS
2.4	08.97 - 09.01	120	AMM/APZ/AJG
2.4 quattro	08.97 - 09.01	120	APZ
2.6	02.96 - 09.01	110	ABC
2.6 quattro	01.96 - 09.01	110	ABC
2.8	10.96 - 09.01	142	APR/ACK/AQD/AMX
2.8 quattro	10.96 - 09.01	142	APR/ACK/AQD/AMX
A4 Avant (8E5, B6) 2.4	09.01 - 12.04	120	AMM
2.4	09.01 - 12.04	125	BDV
A4 Cabrio (8H7, 8HE) 2.4	04.02 - 12.05	120	AMM
2.4	04.02 - 12.05	125	BDV
A6 (4A, C4) 2.8	12.95 - 10.97	142	ACK
2.8 quattro	12.95 - 10.97	142	ACK
A6 (4B, C5) 2.4	07.98 - 01.05	100	ARN/ASM/ALW
2.4	02.97 - 01.05	121	AML/ARJ/ALF/APS
2.4 quattro	02.97 - 01.05	121	AML/ARJ/ALF/APS
2.4	02.97 - 01.05	120	AMM/APZ/AJG
2.4 quattro	02.97 - 01.05	120	APZ/AJG
2.4	02.97 - 01.05	115	APC
2.4 quattro	08.98 - 07.99	115	APC
2.4	08.01 - 01.05	125	BDV
2.4 quattro	08.01 - 01.05	125	BDV
2.7 T quattro	08.01 - 01.05	184	BES/ARE
2.8	02.97 - 01.05	142	APR/ACK/AQD/AMX
2.8 quattro	02.97 - 01.05	142	
2.8	10.97 - 05.00	132	AGE
2.8 quattro	01.98 - 04.00	132	AGE
2.8	07.99 - 01.05	140	ATX
A6 Avant (4A, C4) 2.8	12.95 - 12.97	142	ACK
2.8 quattro	12.95 - 12.97	142	ACK
A6 Avant (4B, C5) 2.4	12.97 - 01.05	120	AMM/APZ/AJG
2.4 quattro	12.97 - 01.05	120	APZ/AJG
2.4	12.97 - 01.05	121	AML/ARJ/ALF/APS
2.4 quattro	12.97 - 01.05	121	AML/ARJ/ALF/APS
2.4	12.97 - 01.05	115	APC
2.4 quattro	08.98 - 05.01	115	APC
2.4	07.98 - 01.05	100	ARN/ASM/ALW
2.4	08.01 - 01.05	125	BDV
2.4 quattro	08.01 - 01.05	125	BDV
2.8	12.97 - 05.00	132	AGE
2.8	07.99 - 01.05	140	ATX

T 887C ▶

< T887C			
Audi A6 Avant (4B, C5) 2.8	12.97 - 01.05	142	APR/ACK/AQD/AMX
2.8 quattro	12.97 - 01.05	142	APR/ACK/AQD/AMX
A8 (4D2, 4D8) 2.8	04.96 - 09.02	142	APR/ACK/AQD/AMX
2.8 quattro	04.96 - 09.02	142	APR/ACK/AQD/AMX
Skoda Superb (3U4) 2.8 V6	12.01 - 03.08	142	AMX
2.8 V6	06.02 - 03.08	140	BBG
VW Passat (3B2) 2.8 Syncro	05.97 - 09.99	132	AGE
2.8 V6	05.97 - 09.99	132	AGE
2.8 V6	09.99 - 11.00	140	BBG
2.8 V6	08.96 - 11.00	142	APR/ACK/AHA/AQD
2.8 V6 Syncro/4mot	10.96 - 11.00	142	APR/ACK/AHA/AQD
Passat (3B3) 2.8	05.02 - 05.03	142	ATQ/AMX
2.8 4motion	11.00 - 05.05	142	ATQ/AMX
Passat Variant 2.8 Syncro	05.97 - 09.99	132	AGE
2.8 V6	09.97 - 09.99	132	AGE
2.8 V6	06.97 - 11.00	142	APR/ACK/AHA/AQD
2.8 V6 Syncro/4mot	06.97 - 11.00	142	APR/ACK/AHA/AQD
Passat Variant 2.8 4mot	11.00 - 05.05	142	ATQ/AMX

T888B K216 14 14 15 28 -

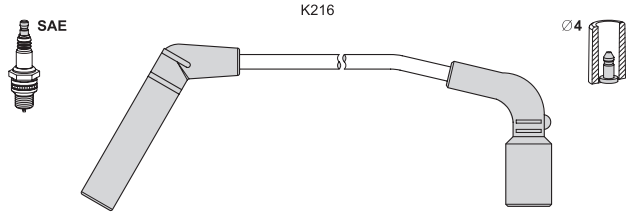

Chevrolet Aveo CC 1.2 (T200)	01.04 - 05.08	53	F12S3
1.2 (T250)	10.08 -	53	F12S3
Aveo Sedan (T250) 1.2	01.08 -	62	LMU/B12D1
1.2	03.06 -	53	F12S3/LQ5
Kalos 1.2	03.05 -	53	B12S1
Kalos Sedan 1.2	03.05 -	53	F12S3
Matiz (M200, M250) 1.0	03.05 -	47	B10S
1.0	03.05 -	49	B10S1
1.0 LPG	03.05 -	49	B10S1
Spark 1.0 SX	05.05 -	46	LA2/B10S
1.0 SX	05.05 -	49	B10S1
Daewoo Kalos (KLAS) 1.2	04.03 -	53	B12S1
Matiz (KLYA) 1.0	01.03 -	47	B10S

T891H K358 22 22 25 25 -

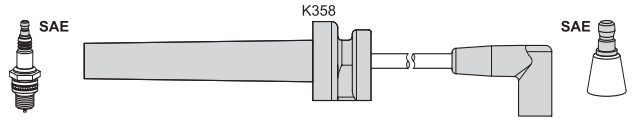

application → T106S

T892B K130 14 14 14 -

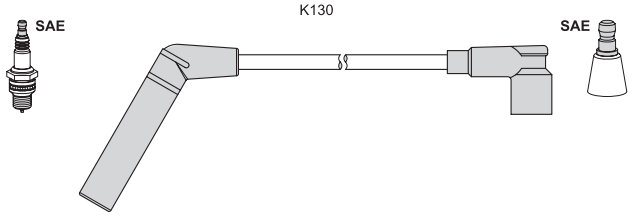

Chevrolet Matiz 0.8	03.05 -	38	F8CV
0.8 LPG	03.05 -	38	F8CV
Spark 0.8	09.00 - 12.04	38	F8CV
0.8	05.05 -	37	F8CV
Daewoo Matiz (KLYA) 0.8	01.02 -	38	F8CV

T894G K115 40 35 18 14 -

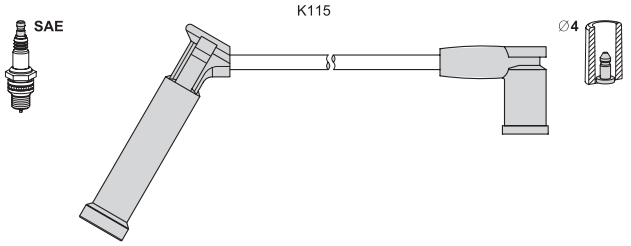

Ford Fiesta IV 1.25 i 16V	05.98 - 01.02	55	DHG/_B/_C/_E/_F
1.4 i 16V	05.98 - 01.02	66	FHE/FHA
Fiesta V 1.25 16V	03.03 -	51	M7JA/M7JB
1.25 16V	05.02 -	55	FUJA/FUJB
Focus (DAW, DBW) 1.4 16V	10.98 - 11.04	55	FXDA/_DD/_DC/_DB
1.6 16V	10.98 - 11.04	74	FYDH/_DA/_DB/_DD
Focus Combi 1.4 16V	02.99 - 11.04	55	FXDA/_DD/_DC/_DB
Focus Sedan (DFW) 1.4 16V	02.99 - 11.04	55	FXDA/_DD/_DC/_DB
Fusion (JU_) 1.25	08.04 -	55	FUJA/FUJB
Puma (EC_) 1.4 16V	05.98 - 04.00	66	FHD
1.7 16V	05.98 - 06.02	92	MHB/MHA

T895B K124 70 55 55 40 -

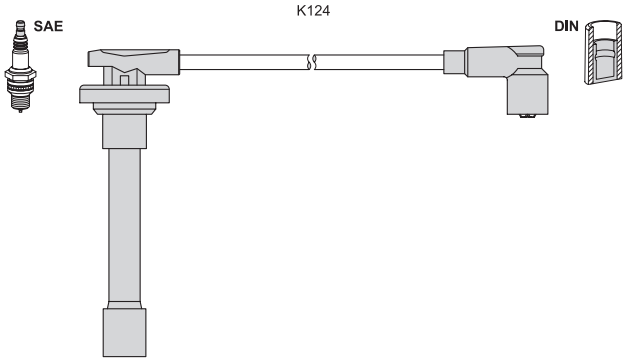

Honda Accord IV 1.8	01.90 - 12.91	77	
2.0 16V	01.90 - 03.93	66	F20A6
2.0 16V	01.90 - 03.93	81	F20A3/F20A2
2.0 i 16V	01.90 - 03.93	98	F20A4/F20A8
2.2 i 16V	01.90 - 03.93	110	F22A3
2.2 i 16V automatic	01.90 - 03.93	108	F22A3
Accord IV Aerod. 2.0 i 16V	03.93 - 12.93	98	F20Z3
2.2 i 16V	01.91 - 12.93	108	F22A8
2.2 i 16V	01.91 - 12.93	110	F22A7
Accord IV Coupe 2.0 i 16V	01.92 - 09.93	98	F20A7
Accord V (CC7) 2.0 i	03.93 - 01.96	85	F20Z2
2.0 i S	03.93 - 01.96	96	F20Z1
Accord V Aerodeck 2.0 i LS	09.93 - 02.98	100	F20B3
2.2 i ES	09.93 - 02.98	110	F22B5
Accord V Coupe 2.0	09.93 - 12.97	100	F20B3
2.2 i ES	09.93 - 02.98	110	F22B5
Accord VI (CE, CF) 1.9 i	02.96 - 10.98	85	F18A3
2.0 i LS	02.96 - 10.98	96	F20Z1
Accord VII (CG) 1.8 i	10.98 - 12.02	100	F18B2
Accord VII Hatchback 1.8 i	12.99 - 12.02	100	F18B2
Prelude IV (BB) 2.0 i 16V	02.92 - 09.96	98	F20A4
Prelude V (BB) 2.0 16V	10.96 - 10.00	98	F20A4
Shuttle (RA) 2.2 16V	10.94 - 02.98	110	F22B8
Rover 618 (RH) 1.8 i/Si	03.96 - 02.99	85	F 18 A3
620 (RH) 2.0 i	08.93 - 06.96	85	F 20 Z2
620 (RH) 2.0 Si	08.93 - 02.99	96	F 20 Z1

T896B K414 40 40 60 70 K458 60/K071 40

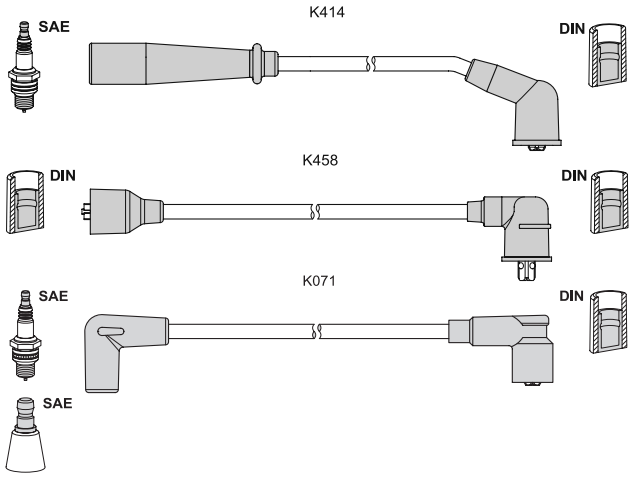

Kia Avella 1.3	11.95 - 12.01	55	B3
1.5	02.97 - 12.01	55	

T897B K332 60 55 50 35 - original T757C

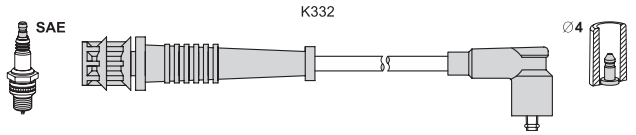

application → T757C (original)

T898B K028 50 50 70 70 -

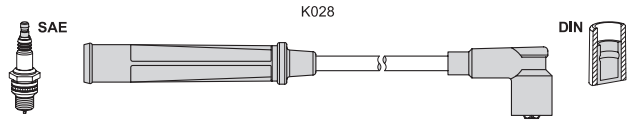

Mazda 121 II (DB) 1.1	11.90 - 10.93	40	B1
1.3 16V	11.90 - 03.96	39	B3 (16V)
1.3 16V	11.90 - 03.96	53	B3 (16V)
323 C V (BA) 1.3 16V	08.94 - 09.98	54	B3 (16V)
323 P V (BA) 1.3 16V	10.96 -	54	B3 (16V)
323 S V (BA) 1.3 16V	08.94 - 09.98	54	B3 (16V)

T899B K028 75 50 50 35 K079 75

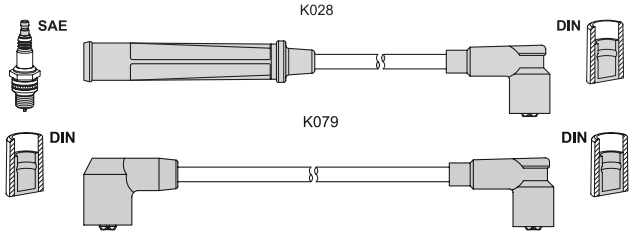

Mazda 626 III (GD) 1.6	06.87 - 05.92	60	
1.8	11.87 - 05.92	65	F8 (12V)
2.0	09.87 - 10.90	66	FE
2.0 12V	09.87 - 05.92	79	FE (12V)
2.2 12V	11.87 - 07.91	85	F2
2.2 12V 4WD	01.90 - 05.92	85	F2
626 III Coupe (GD) 1.6	06.87 - 05.92	60	
1.8	09.87 - 08.91	65	F8 (12V)
2.0	09.87 - 10.90	66	FE
2.0 12V	09.87 - 12.88	79	FE (12V)
2.2 12V	04.88 - 12.91	85	F2
626 III Hatchback (GD) 1.6	06.87 - 05.92	60	
1.8	11.87 - 05.92	65	F8 (12V)

< T899B

Mazda 626 III Hatchback (GD) 2.0	09.87 - 10.90	66	FE
2.0 4x4	08.89 - 07.91	110	
2.0 12V	11.87 - 05.92	79	FE (12V)
2.2 12V	06.88 - 04.92	85	F2
2.2 12V 4WD	11.87 - 07.90	85	F2
626 III Station Wagon 1.8	01.88 - 03.92	65	F8 (12V)
2.0	10.88 - 09.97	66	FE
2.0 12V	09.87 - 01.90	81	FE (12V)
2.0 i 16V	11.94 - 09.97	110	
2.2 12V	03.89 - 11.96	85	F2
2.2 12V 4WD	05.91 - 11.92	85	F2L1/F2

T900B K135 35 45 K134 55 60 K324 30

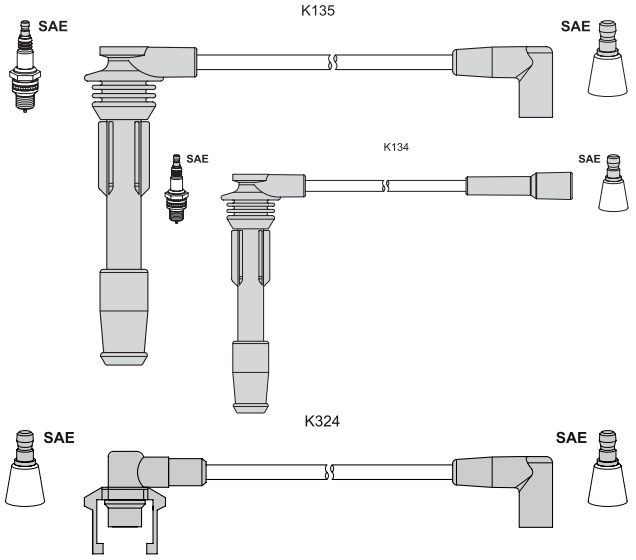

Renault 19 I (B/C53_) 1.8 16V	06.89 - 04.92	99	F7P 704
19 I Cabriolet 1.8 16V	07.91 - 04.92	101	F7P 704
19 I Chamade 1.8 16V	10.89 - 04.92	99	F7P 704
19 II (B/C53_) 1.8 16V	04.92 - 12.95	99	F7P 704
19 II Cabriolet 1.8 16V	04.92 - 06.96	99	F7P 704
19 II Chamade 1.8 16V	04.92 - 12.95	99	F7P 704
Clio I 1.8 16V	01.91 - 03.96	99	F7P 722
2.0 Williams	01.94 - 09.98	108	F7R 700

T901B K605 40 50 55 65 -

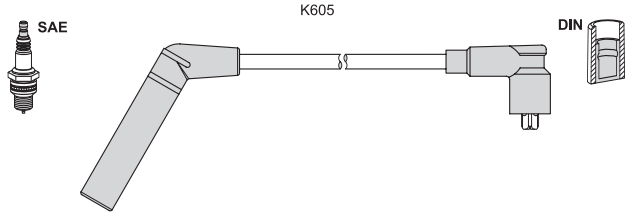

Mitsubishi Colt II 1.3 EL,GL	06.86 - 04.88	49	G13B
Colt IV 1.3 GLi 12V	04.92 - 04.96	55	4G13 (12V)
Colt V 1.3 GL,GLX	05.96 - 09.00	55	4G13 (12V)
1.5	11.95 - 09.03	69	4G15 (16V)
Lancer IV 1.3	05.88 - 06.90	44	G13B
Lancer IV Sedan 1.3	08.88 - 05.92	51	G13B
1.3 GL	05.88 - 06.90	50	G13B
Lancer V 1.3	06.92 - 02.95	55	4G13 (12V)
1.3	06.92 - 12.96	55	4G13 (12V)
Lancer V St. Wagon 1.3	11.99 - 08.03	55	4G13 (12V)
1.3 16V	09.97 - 10.99	55	4G13 (12V)
Lancer VI 1.3 12V	12.95 - 08.03	55	4G13 (12V)
1.5 16V	12.95 - 08.03	69	4G15 (16V)

T 902B ▶

T902B K126 40 55 70 65 -

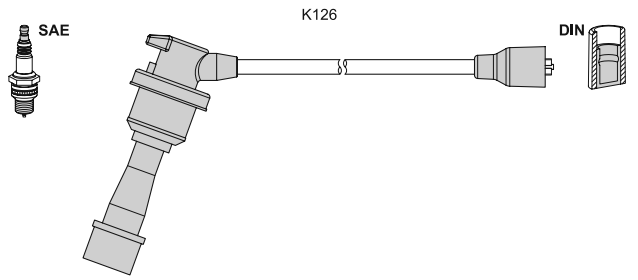

Hyundai Lantra I 1.6 i.e. 16V	10.90 - 11.95	78	G4CR
1.6 i.e. 16V	10.90 - 11.95	84	G4CR
1.8 i.e. 16V	10.90 - 11.95	93	G4CN
Santamo 2.0 16V	05.99 -	102	
2.0 16V 4x4	05.99 -	102	G4CP
Sonata II (Y-2) 2.0 i	01.91 - 10.93	80	G4CP-U
2.0 i 16V	01.91 - 10.93	96	G4CP-D
Sonata III (Y-3) 2.0 i 16V	05.93 - 06.98	102	G4CP-D
2.0 i 16V	06.96 - 06.98	92	G4CP-DM
Kia Joice 2.0	02.00 -	102	G4CP
2.0	09.01 -	88	
Mitsubishi Colt III 1.6 GTi 16V	04.88 - 05.90	91	4G61
1.8 GTi 16V cat	06.90 - 05.92	100	4G67
Eclipse I (D2_A) 2.0 i 16V	04.91 - 11.95	110	4G63 (DOHC 16V)
2.0 i 16V 4x4	04.91 - 11.95	110	4G63 (DOHC 16V)
2.0 Turbo 4WD	12.89 - 03.94	157	
Lancer IV 1.8 GTi 16V	11.89 - 05.92	100	4G67
Santamo 2.0 16V	05.99 - 12.02	102	4G63 (DOHC 16V)
2.0 16V 4WD	05.99 - 12.02	102	4G63 (DOHC 16V)

T903B K126 35 45 55 60 -

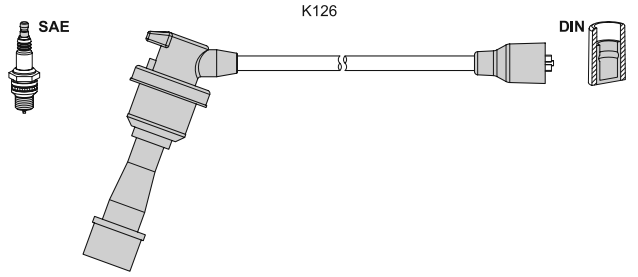

Mitsubishi Eclipse II 2.0 GS 16V	12.95 - 04.99	107	4G63 (DOHC 16V)
Galant III 1.6 GLX	06.84 - 04.90	55	4G32
Galant IV 2.0 GTi 16V	11.88 - 10.92	106	4G63 (DOHC 16V)
2.0 GTi 16V	11.88 - 10.92	107	4G63 (DOHC 16V)
2.0 GTi 16V 4x4	07.89 - 12.92	106	4G63 (DOHC 16V)
Galant IV Sed. 2.0 GTi 16V	11.87 - 10.92	106	4G63 (DOHC 16V)
2.0 GTi 16V	11.88 - 10.92	107	4G63 (DOHC 16V)
2.0 GTi 16V 4WD	06.88 - 10.92	106	4G63 (DOHC 16V)
Lancer III 1.5 GLX	06.85 - 04.88	51	G15B
Lancer III St. Wagon 1.5	09.85 - 08.89	51	G15B
Lancer IV 1.8 4WD	09.89 - 06.92	71	4G37
Space Wagon 2.0 GLXi	06.88 - 04.91	74	4G63 (SOHC 8V)
2.0 GLXi 4WD	06.88 - 04.91	74	4G63 (SOHC 8V)

T904M K140 45 25 25 25 -

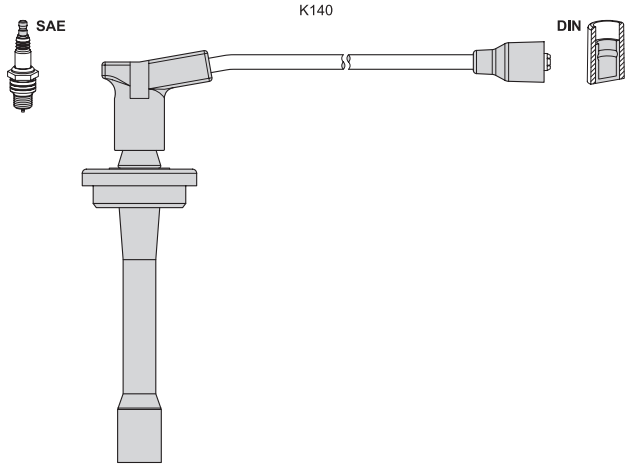

application → T804S

T905B K387 60 70 85 90 K109 90

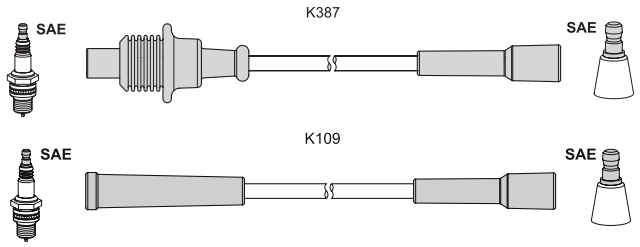

Citroen BX 16 (XB) 1.6	03.86 - 02.93	76	180Z
BX 16 Break 1.6	03.86 - 12.94	76	180Z
BX Break 1.6	01.87 - 01.92	85	B6E/B6D
ZX (N2) 1.9 i	03.91 - 06.97	88	DKZ (XU9JA)
Peugeot 205 I Cabrio 1.9 CTI	01.91 - 12.94	75	DFZ (XU9J1)
205 II (20A/C) 1.9 GTI	01.91 - 09.98	94	D6B (XU9JA)
1.9 GTI	01.91 - 10.94	88	DKZ (XU9JAZ)
309 II (3C, 3A) 1.9	01.91 - 12.93	72	DFZ (XU9J1)
1.9	10.90 - 12.93	80	DDZ (XU9M)
1.9 GTI	07.89 - 12.93	88	DKZ (XU9JAZ)

T906B K149 55 65 75 80 K061 55

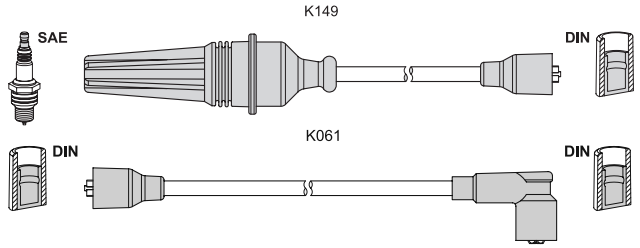

Peugeot 205 I 1.0	02.83 - 10.87	33	108C (XV8)
1.1	02.83 - 10.87	37	109F (XW7)
1.4	02.83 - 10.87	44	150D (XY7)/150G
1.4	10.85 - 10.87	58	150H (XY8)
1.4	02.83 - 10.87	59	150B (XY8)
205 I Cabriolet 1.4 CJ	03.88 - 05.89	44	150D (XY7)/150G
1.4 CJ cat	01.89 - 09.93	44	KAY (TU3CP)
1.4 CT	04.86 - 12.88	58	150B (XY8)/150H
205 II (20A/C) 1.1	10.87 - 10.90	36	109N (XW7)
1.4	10.87 - 05.89	44	150D (XY7)/150G
1.4	07.88 - 05.89	58	150B (XY8)/150H

T907C K084 35 45 55 65 K100 75 — alternative T028B

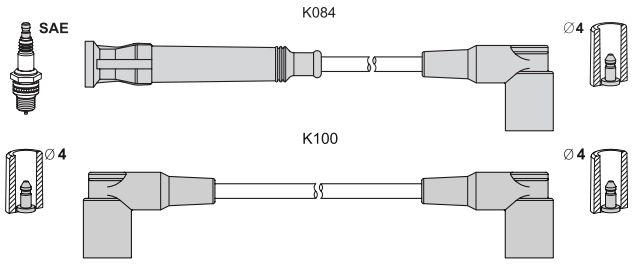

application → T176C

T908B K010 35 35 40 45 K061 80

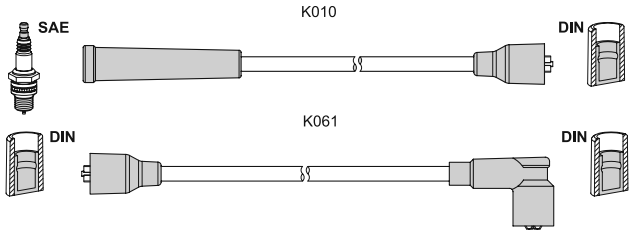

Renault 5 (122_) 0.8	01.82 - 12.84	27	800 710
1.0	01.72 - 12.85	32	689 710
9 (L42_) 1.1	09.81 - 05.87	35	C1E 715/C1E 720
1.2	09.85 - 12.88	40	C1G 700/C1G 710
1.4	12.81 - 12.88	44	C1J 715/792/796
11 (B/C37_) 1.2	10.84 - 12.88	40	C1G 700/C1G 710
1.4	03.83 - 12.88	49	C2J766/720/768/767
1.4	03.83 - 12.85	50	C2J 718
1.4	05.83 - 12.85	53	C2J 717
18 (134_) 1.4	04.78 - 07.86	47	847 720/847 722
Clio I (B/C57_) 1.1	01.91 - 09.98	34	C1E 700
Clio I Van (S57_) 1.1	01.91 - 09.98	34	C1E 700
Fuego (136_) 1.6 TS/GTS	10.80 - 10.85	71	843 723/A6M 725
Rapid Van (F40_) 1.0	02.86 - 05.92	27	C1C 706
1.1	07.85 - 04.95	33	C1E 752/762/50/754
Super 5 (B/C40_) 1.0	10.84 - 10.88	30	C1C 700
1.1	10.84 - 10.88	34	C1E 752/750/754
1.1	01.86 - 03.95	33	C1E752/750/756/760
1.2	01.87 - 08.90	40	C1G 722/702/720
Super 5 Van (S40_) 1.1	10.84 - 12.96	34	C1E 752/750/754
1.2	01.87 - 12.96	44	C1G 702
Trafic Bus (T5, T6, T7) 1.4	03.80 - 04.89	35	C1J 700
Trafic Flatbed (P6) 1.4	03.80 - 04.89	35	C1J 700
Trafic Van (T1, T3, T4) 1.4	03.80 - 04.89	35	C1J 700
Trafic Van (TXX) 1.4	05.89 - 06.91	35	C1J 700

T909B K041 30 40 60 65 K324 70

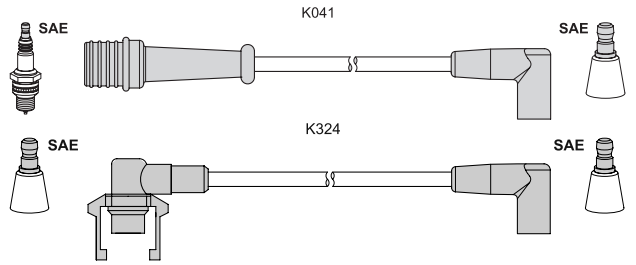

Renault Safrane I 2.0	11.92 - 07.96	77	J7R 732/J7R 733
2.0 12V	04.92 - 07.96	97	J7R 735/J7R 734
2.2	04.92 - 07.96	79	J7T 762
2.2	04.92 - 07.96	101	J7T 760/J7T 761

T910H K022 30 25 35 50 -

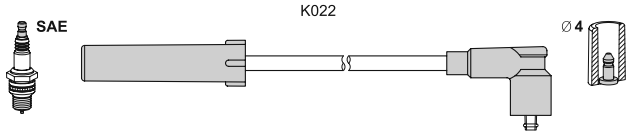

application → T930B

T912B K012 75 60 60 45 K062 40

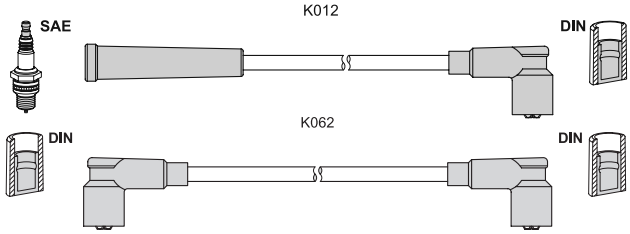

Seat Ibiza I (021A) 1.2	11.84 - 12.93	44	021 A 1000
1.2	11.84 - 12.93	47	021 A 1000
1.2 i	01.89 - 05.93	52	021 C.1000
1.5	11.84 - 05.93	63	021 A 2000
1.5 i	10.86 - 05.93	65	021 D.2000
1.5 i	10.86 - 03.91	74	021 B.2000
1.5 i cat	10.86 - 05.93	66	021 C.2000
Malaga (023A) 1.2	05.85 - 12.93	44	021 A 1000
1.2	11.84 - 12.93	47	021 A 1000
1.2 i	12.89 - 12.93	52	021 C.1000
1.5	05.85 - 12.93	63	021 A 2000
1.5 i	01.87 - 12.93	74	021 B.2000
1.5 i cat	10.86 - 12.93	66	021 _. _

T913B K175 60 60 60 70 -

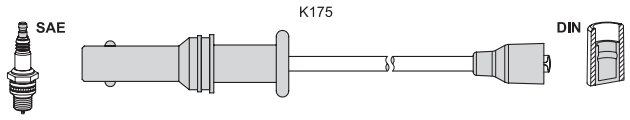

Subaru Legacy I 2.0 4WD	08.91 - 07.94	85	EJ20 EMPI
2.0 Turbo 4WD	05.92 - 07.94	147	EJ20-GN
2.2 4WD	01.89 - 07.94	100	EJ22 EMPI
Legacy I St. Wagon 2.0	09.91 - 12.93	85	EJ20 EMPI
2.0 4WD	09.91 - 07.94	85	EJ20 EMPI
2.0 Turbo Super 4WD	05.92 - 07.94	147	EJ20-GN
2.2 Super 4WD	01.89 - 07.94	100	EJ22 EMPI

T914B K378 30 40 45 60 K071 30

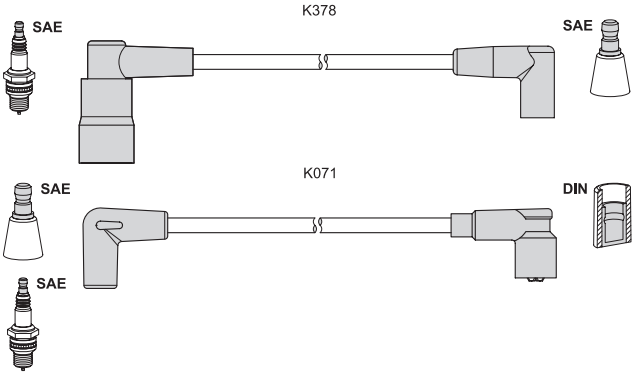

Volvo 440 K (445) 1.7 Turbo	08.88 - 07.96	88	B 18 FT
1.7 Turbo	01.91 - 12.96	90	B 18 FT
460 L (464) 1.7 Turbo	08.89 - 07.96	88	B 18 FT
1.7 Turbo	01.91 - 07.96	90	B 18 FT
480 E 1.7 Turbo	08.87 - 07.96	88	B 18 FT

T 914B ▶

< T914B			
Volvo 480E 1.7 Turbo	01.91 - 07.96	90	B 18 FT

T915B K305 35 40 55 60 K300 60

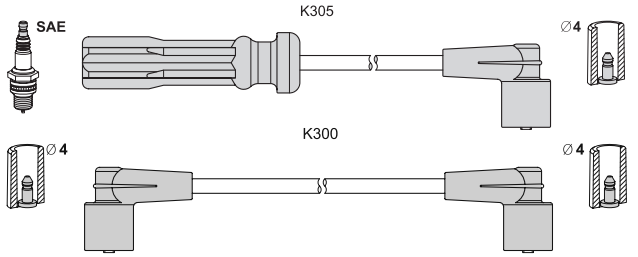

Volvo 740 (744) 2.0	08.85 - 07.92	89	B 200 G
2.3	09.85 - 12.89	83	B 230 F
2.3	08.86 - 07.88	86	B 230 K
2.3 Turbo	08.86 - 07.89	115	B 230 FT
2.3 Turbo	08.89 - 07.90	121	B 230 FT
2.3 Turbo	09.89 - 08.91	125	B 230 FT
2.3 Turbo	08.89 - 07.90	140	B 230 FT
740 Combi (745) 2.0	08.85 - 07.92	89	B 200 G/B 200 E
2.3	09.85 - 07.90	84	B 230 K
2.3 Turbo	08.86 - 07.89	115	B 230 FT
2.3 Turbo	08.89 - 07.90	121	B 230 FT
2.3 Turbo	09.89 - 08.91	125	B 230 FT
2.3 Turbo	08.89 - 07.90	140	B 230 FT
760 (704, 764) 2.3	01.88 - 07.92	119	B 230 FT
2.3 Turbo	09.87 - 08.90	115	B 230 FT
760 Combi 2.3 Turbo	09.87 - 08.90	115	B 230 FT
940 (944) 2.0	01.92 - 07.94	82	B 200 F
2.0 Turbo	08.90 - 12.94	114	B 200 FT
2.3	08.92 - 07.94	85	B 230 FD
2.3	08.90 - 12.94	96	B 230 G/B 230 FB
2.3 Turbo	08.91 - 07.93	140	B 230 FT+
940 Combi (945) 2.0	01.92 - 07.94	82	B 200 F
2.0 Turbo	01.91 - 07.95	114	B 200 FT
2.3	08.92 - 07.94	85	B 230 FD
2.3	08.90 - 12.94	96	B 230 FB
940 II (944) 2.0 Turbo	04.96 - 10.98	114	B 200 FT
2.3	08.94 - 07.95	85	B 230 FD
2.3	08.94 - 10.98	96	B 230 FB
2.3 ti	01.95 - 10.98	99	B 230 FK
2.3 Turbo	08.94 - 10.98	121	B 230 FT
940 II Combi 2.0 Turbo	04.96 - 10.98	114	B 200 FT
2.3	08.94 - 07.95	85	B 230 FD
2.3	08.94 - 10.98	96	B 230 FB
2.3 ti	01.95 - 10.98	99	B 230 FK
2.3 Turbo	08.94 - 10.98	121	B 230 FT
2.3 Turbo	08.95 - 10.98	126	B 230 FT
960 (964) 2.0	08.90 - 09.93	140	B 204 FT
960 Combi (965) 2.0	08.90 - 09.93	140	B 204 FT

T916B K122 65 60 45 35 25 K300 50

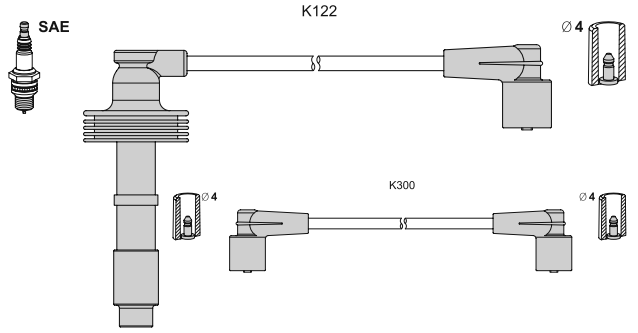

< T916B			
Renault Safrane II 2.5 20V	07.96 - 12.00	121	N7U 700/N7U 701
Volvo 850 (LS) 2.0	08.94 - 12.96	93	B 5202 S
2.0	06.91 - 12.96	105	B 5204 F
2.0 Turbo	08.93 - 12.96	155	B 5204 T/B 5204 FT
2.3 T5	08.93 - 07.96	166	B 5234 FT
2.3 T5-R	08.95 - 12.96	184	B 5234 T4
2.5	06.91 - 07.94	103	B 5252
2.5	08.94 - 12.96	106	B 5252 FS
2.5	08.91 - 12.96	125	B 5254 S
850 Combi (LW) 2.0	08.94 - 12.96	93	B 5202 S
2.0	02.93 - 12.96	105	B 5204 F
2.0 Turbo	02.93 - 12.96	155	B 5204 T/B 5204 FT
2.3 T5	02.93 - 12.96	166	B 5234 FT
2.3 T5-R	08.95 - 12.96	184	B 5234 T4
2.5	08.92 - 07.94	103	B 5252
2.5	08.94 - 12.96	106	B 5252 FS
2.5	09.92 - 12.96	125	B 5254 S
2.5 AWD	04.96 - 12.96	142	B 5254 T
C70 I Cabriolet 2.0	03.98 - 10.05	132	B 5204 T2
2.0 T	03.98 - 08.98	166	B 5204 T3
2.3 T5	03.98 - 08.98	176	B 5234 T3
2.5 T	03.98 - 08.98	142	B 5254 T
C70 I Coupe 2.0	03.97 - 09.02	132	B 5204 T2
2.0 T	03.97 - 07.98	166	B 5204 T3
2.3 T5	03.97 - 07.98	176	B 5234 T3
2.5 T	03.97 - 09.02	142	B 5254 T
S70 (P80_) 2.0	01.97 - 11.00	93	B 5202 S
2.0	01.97 - 11.00	105	B 5204 F
2.0	01.97 - 11.00	132	B 5204 T2
2.0 Turbo	01.97 - 11.00	155	B 5204 T
2.0 Turbo	01.97 - 11.00	166	B 5204 T3
2.3	04.99 - 09.00	195	B 5234 T7
2.3 T5	01.97 - 07.98	176	B 5234 T3
2.3 T5 AWD	07.97 - 09.00	184	B 5234 T4
2.3 Turbo	01.97 - 11.00	184	B 5234 FT+
2.4	01.97 - 11.00	125	B 5244 S/B 5254 S
2.4 AWD	11.96 - 05.99	106	B 5252 FS
2.4 T5 AWD	11.96 - 04.99	142	B 5254 T
2.4 Turbo	01.97 - 07.98	142	B 5254 T/B 5244 T
2.5	01.97 - 11.00	106	B 5252 FS
2.5	06.98 - 11.00	121	B 5254 S
2.5 Bifuel	10.98 - 11.00	106	GB 5252 S
V70 I (P80_) 2.0	01.97 - 03.00	93	B 5202 S
2.0	01.97 - 03.00	105	B 5204 F
2.0	01.97 - 03.00	132	B 5204 T2
2.0 Turbo	01.97 - 07.98	155	B 5204 T
2.0 Turbo	01.97 - 07.98	166	B 5204 T3
2.0 Turbo AWD	01.97 - 07.98	166	B 5204 T3
2.3 AWD	04.97 - 09.98	177	B 5234 T3
2.3 T AWD	04.97 - 03.00	184	B 5234 FT+
2.3 T5	01.97 - 07.98	176	B 5234 T3
2.3 T5 AWD	01.97 - 07.98	176	B 5234 T3
2.3 Turbo	01.97 - 03.00	184	B 5234 FT+
2.4 Turbo	01.97 - 07.98	142	B 5254 T
2.5	01.97 - 03.00	106	B 5252 FS
2.5	06.98 - 03.00	121	B 5254 S
2.5 Bifuel	10.98 - 08.99	106	GB 5252 S
2.5 Turbo AWD	01.97 - 07.98	142	B 5254 T

T917B K123 35 25 25 35 -

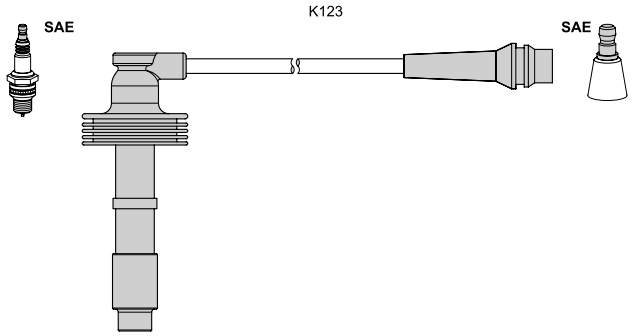

Renault Laguna (B56) 2.0	06.95 - 02.01	103	N7Q 700/N7Q 704
2.0 16V	06.95 - 03.01	102	N7Q 700/N7Q 704
Laguna Grandtour 2.0 16V	09.95 - 03.01	102	N7Q 700/N7Q 704
Safrane II (B54_) 2.0 16V	07.96 - 12.00	100	N7Q 710/N7Q 711
Volvo S40 I (VS) 1.6	09.95 - 08.99	77	B 4164 S
1.6	03.99 - 12.03	80	B 4164 S2
1.8	07.95 - 08.99	85	B 4184 S3/B 4184 S
1.8	03.99 - 12.03	90	B 4184 S2/B 4184 S9
1.8 i	06.01 - 12.03	90	B 4184 SJ
1.8 i	03.98 - 12.03	92	B 4184 SM
2.0	07.95 - 12.03	100	B 4204 S2/B 4204 S
2.0	07.95 - 08.99	103	B 4204 S
2.0 T	10.97 - 07.00	118	B 4204 T
V40 Combi (VW) 1.6	12.95 - 08.99	77	B 4164 S
1.6	03.99 - 06.04	80	B 4164 S2
1.8	07.95 - 08.99	85	B 4184 S3/B 4184 S
1.8	03.99 - 06.04	90	B 4184 S2/B 4184 S9
1.8 i	03.98 - 06.04	92	B 4184 SM
1.9 T4	05.97 - 07.00	147	B 4194 T
2.0	07.95 - 06.04	100	B 4204 S2/B 4204 S
2.0	07.95 - 08.99	103	B 4204 S
2.0 T	10.97 - 07.00	118	B 4204 T

T918C K087 100 85 85 70 70 55 K090 50 — alternative T063B

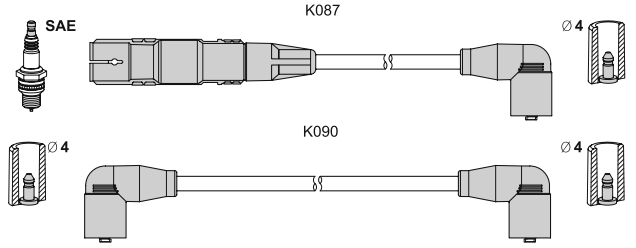

VW Corrado (53I) 2.9 VR6	08.91 - 12.95	140	ABV
Golf III 2.9 VR6 Syncro	10.94 - 08.97	140	ABV
Golf III Variant 2.9 VR6	10.94 - 04.99	140	ABV
2.9 VR6 Syncro	10.94 - 04.99	140	ABV
Passat Var. 2.9 VR6 Syncro	01.94 - 05.97	135	ABV

T920C K081 85 85 85 55 55 K090 75 — alternative T057B

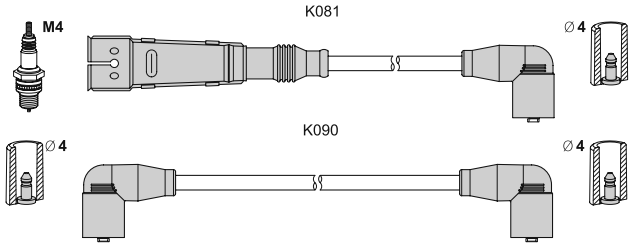

VW Transporter IV Bus 2.5	11.90 - 04.03	81	AEN/AAF/ACU/AEU
2.5	08.96 - 04.03	85	AET

< T920C

VW Transporter IV Bus 2.5 Syncro	11.92 - 04.03	81	AEN/AAF/ACU/AEU
2.5 Syncro	07.96 - 04.03	85	AET
Transporter IV Flatbed 2.5	11.90 - 04.03	81	AEN/AAF/ACU/AEU
2.5	08.96 - 04.03	85	AET
2.5 Syncro	10.92 - 04.03	81	AEN/AAF/ACU/AEU
2.5 Syncro	08.96 - 04.03	85	AET
Transporter IV Van 2.5	11.90 - 04.03	81	AEN/AAF/ACU/AEU
2.5	08.96 - 04.03	85	AET
2.5 Syncro	10.92 - 04.03	81	AEN/AAF/ACU/AEU
2.5 Syncro	08.96 - 04.03	85	AET

T921B K405 45 35 30 25 -

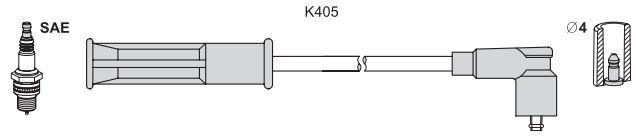

Renault Kangoo Express 1.6	02.08 -	64	K7M 750
Kangoo/Grand Kangoo 1.6	02.08 -	64	K7M 750
Symbol 1.4	08.00 -	55	K7J 700
Thalia (LB0/1/2_) 1.4	08.00 -	55	K7J 700

T922C K082 85 85 85 85 K131 60 — alternative T019B

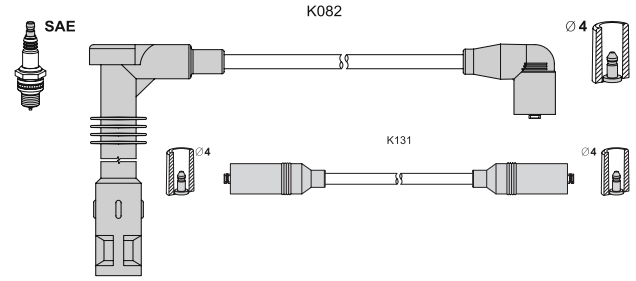

VW Passat (3A2, 35I) 2.0 16V	01.94 - 08.96	110	ABF
Passat Variant 2.0 16V	01.94 - 05.97	110	ABF

T923B K166 25 40 45 50 -

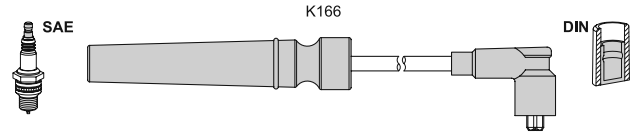

Chevrolet Lacetti 1.4 16V	03.05 -	70	F14D3
1.6	03.05 -	80	F16D3
Lacetti Combi 1.6 LPG	06.09 - 12.11	80	F16D3
Lacetti Sedan 1.4	03.05 - 03.13	69	F14D3
1.6 LPG	03.05 - 03.13	80	F16D3
Nubira Combi 1.6	03.05 -	80	F16D3
Nubira Sedan 1.4	01.06 -	70	F14D3
1.4	01.05 -	69	F14D3
1.6	03.05 -	80	F16D3
Daewoo Lacetti (KLAN) 1.6	02.04 -	80	F16D3
Nexia New 1.6 (UzDaewoo)	07.08 -	80	F16D3 DOHC
Nubira Sedan (KLAN) 1.6	07.03 -	80	F16D3
Nubira Wagon (KLAN) 1.6	07.03 -	80	F16D3
ZAZ Vida 1.4 i 16V	01.12 -	69	F14D3
Vida Hatchback 1.4 i 16V	01.12 -	69	F14D3

T 924B ▶

T924B K503 35 40 50 60 K065 55

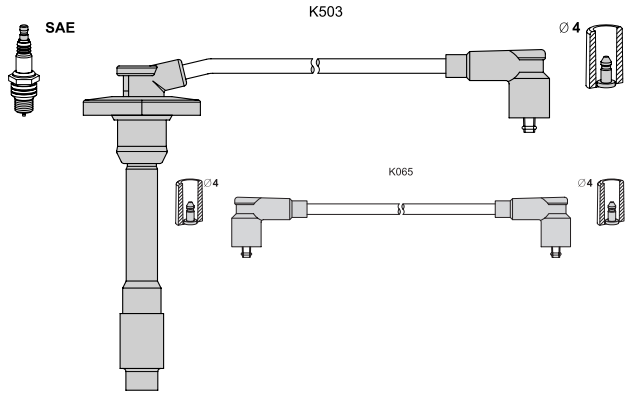

Toyota Avensis (_T22_) 1.6	09.97 - 10.00	74	4A-FE
1.6	09.97 - 10.00	81	4A-FE
Avensis Liftback 1.6	09.97 - 10.00	74	4A-FE
1.6	09.97 - 10.00	81	4A-FE
Avensis St. Wagon 1.6	09.97 - 10.00	74	4A-FE
1.6	09.97 - 10.00	81	4A-FE
Carina E (_T19_) 1.6	12.93 - 09.97	73	4A-FE
1.6	12.93 - 09.97	85	4A-FE
1.6 16V	10.95 - 09.97	78	4A-FE
1.6 GLI	04.92 - 09.97	79	4A-FE
1.8	01.95 - 09.97	79	7A-FE
Carina E Sedan 1.6	01.95 - 09.97	73	4A-FE
1.6	01.93 - 09.97	79	4A-FE
1.6	10.95 - 09.97	78	4A-FE
1.6 16V	12.94 - 09.97	85	4A-FE
1.8 i 16V	01.95 - 09.97	79	7A-FE
Carina E Sportswagon 1.6	04.92 - 09.97	85	4A-FE
1.6 GLI	01.93 - 09.97	79	4A-FE
1.6 i	02.95 - 09.97	73	4A-FE
1.8 i	02.95 - 09.97	79	7A-FE

T926P K156 22 26 35 45 -

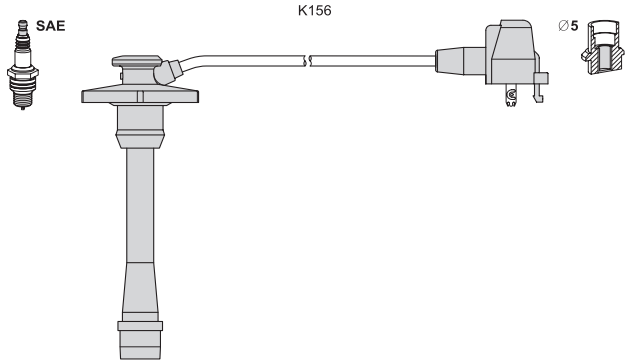

Toyota Corolla (_E11_) 1.4	04.97 - 02.00	63	4E-FE
Corolla Compact (E11) 1.4	04.97 - 02.00	63	4E-FE
Corolla Liftback (E11) 1.4	04.97 - 02.00	63	4E-FE
Corolla Wagon (E11) 1.4	04.97 - 02.00	63	4E-FE

T927P K157 55 53 43 26 -

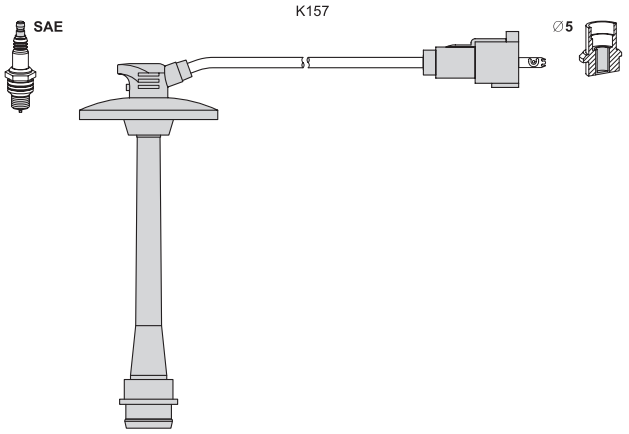

Toyota Avensis (_T22_) 2.0	09.97 - 10.00	94	3S-FE
Avensis Liftback 2.0	09.97 - 10.00	94	3S-FE
Avensis St. Wagon 2.0	09.97 - 10.00	94	3S-FE
Camry (_CV2_) 2.2	11.00 - 11.01	93	5S-FE
2.2	08.96 - 11.01	96	5S-FE
Camry Solara Cabrio 2.2	02.00 - 11.02	98	5S-FE
Camry Solara Coupe 2.2	06.98 - 06.01	98	5S-FE
Picnic (_XM10) 2.0	01.01 - 12.01	90	3S-FE
2.0 16V	05.96 - 12.01	94	3S-FE
RAV 4 I (SXA1_) 2.0 4WD	08.96 - 06.00	95	3S-FE
RAV 4 I Cabrio 2.0 16V 4WD	12.97 - 06.00	94	3S-FE

T928C K116 60 60 45 35 - alternative T991B

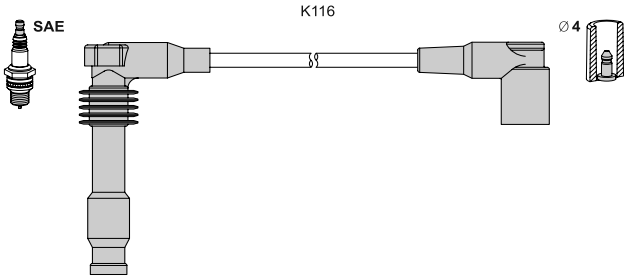

Opel/Vauxhall Astra F 1.4 i 16V	02.96 - 09.98	66	X 14 XE
1.6 i 16V	08.94 - 09.98	74	X 16 XEL
Astra F Cabriolet 1.4 i 16V	01.96 - 03.01	66	X 14 XE
Astra F Caravan 1.4 i 16V	02.96 - 01.98	66	X 14 XE
1.6 i 16V	08.94 - 01.98	74	X 16 XEL
2.0 i 16V	03.93 - 01.98	110	C 20 XE
Astra F CC (5_ _) 1.4 i 16V	01.96 - 01.98	66	X 14 XE
1.6 i 16V	08.94 - 01.98	74	X 16 XEL
2.0 GSI 16V	09.91 - 01.98	110	C 20 XE
Astra G Caravan 1.4 16V	06.98 - 07.04	66	X 14 XE/Z 14 XE
Astra G CC 1.4 16V	02.98 - 01.05	66	X 14 XE/Z 14 XE
Astra G Sedan 1.4 16V	09.98 - 01.05	66	X 14 XE/Z 14 XE
Corsa B 1.4 i 16V	09.94 - 09.00	66	X 14 XE
1.4 i 16V	08.97 - 09.00	63	C 14 SEL
1.6 GSI 16V	03.93 - 09.00	80	C 16 XE
1.6 i 16V	09.94 - 09.00	78	X 16 XE
Vectra B (36_) 1.6 i 16V	10.95 - 04.02	74	Z16/Y16 XE/X16XEL
Vectra B Caravan 1.6 i 16V	11.96 - 07.02	74	Z16/Y16 XE/X16XEL
Vectra B CC (38_) 1.6 i 16V	10.95 - 07.02	74	Z16/Y16 XE/X16XEL
Zafira A (F75_) 1.6 16V	04.99 - 06.05	74	Z 16 XE/X 16 XEL

T929B K150 60 60 40 40 K066 30

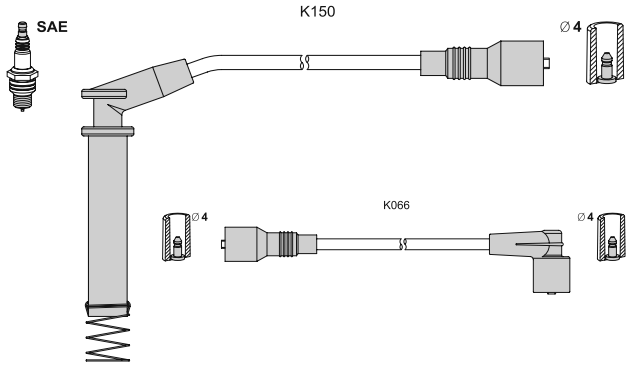

Opel/Vauxhall Calibra A 2.0 i	06.90 - 07.97	85	C 20 NE
2.0 i 4x4	06.90 - 07.97	85	C 20 NE
Vectra A 1.8 i cat	03.90 - 11.95	66	C 18 NZ
1.8 S	09.88 - 07.89	65	E 18 NVR
1.8 S	09.89 - 10.90	66	18 SV
1.8 S 4x4	01.89 - 07.89	65	E 18 NVR
2.0 i	09.88 - 10.90	85	20 NE
2.0 i cat	09.88 - 11.95	85	C 20 NE
2.0 i 4x4	01.89 - 10.90	85	20 NE
2.0 i 4x4 cat	01.89 - 11.95	85	C 20 NE
Vectra A CC 1.8 i	09.88 - 10.90	66	18 SV
1.8 i cat	03.90 - 11.95	66	C 18 NZ
1.8 S	09.88 - 07.89	65	E 18 NVR
2.0 i	09.88 - 10.90	85	20 NE
2.0 i cat	09.88 - 11.95	85	C 20 NE

T930B K022 30 25 35 50 -

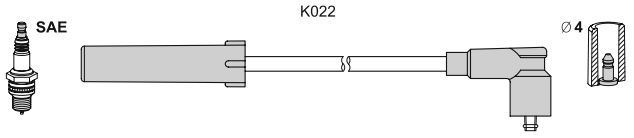

Dacia Dokker 1.6	11.12 -	61	K7M 812/K7M 828
1.6 LPG	11.13 -	61	K7M 812/K7M 828
Dokker Express 1.6	12.12 -	61	K7M 812/K7M 828
1.6 LPG	11.13 -	61	K7M 812/K7M 828
Lodgy 1.6	03.12 -	61	K7M 812/K7M 828
1.6 LPG	11.13 -	61	K7M 812/K7M 828
Logan 1.4	09.04 -	55	K7J 710
1.4 MPI LPG	02.06 -	55	K7J 714/K7J 710
1.6	09.04 -	64	K7M 710
1.6 Bifuel	05.10 -	62	K7M 800
1.6 MPI 85	05.10 -	62	K7M 800
Logan Express (FS_) 1.4	03.09 -	55	K7J 710
1.6	03.09 -	64	K7M 710
1.6 Bifuel	05.10 -	62	K7M 800
1.6 MPI 85	05.10 -	62	K7M 800
Logan MCV (KS_) 1.4	02.07 -	55	K7J 710
1.6	02.07 -	64	K7M 710
1.6 Bifuel	11.08 -	64	K7M 710
1.6 MPI 85	05.10 -	62	K7M 800
Logan Pick-Up (US_) 1.4	01.09 -	55	K7J 710
1.6	03.08 -	64	K7M 710
1.6 Bifuel	05.10 -	62	K7M 800
Sandero 1.4	06.08 -	55	K7J 710
1.4 MPI LPG	01.09 -	53	K7J 714
1.6	06.08 -	64	K7M 710
1.6 MPI 85	05.10 -	62	K7M 800
Sandero II 1.6	11.12 -	61	K7M 812
Solenza 1.4	02.03 -	55	K7J 710
Renault Logan (LS_) 1.4	09.04 -	55	K7J 710

< T930B

Renault Logan (LS_) 1.6	09.04 -	64	K7M 710
Logan Combi (KS_) 1.4	10.07 -	55	K7J 710
1.6	04.07 -	64	K7M 710
Sandero/Stepway I 1.4	02.09 -	55	K7J 710
1.6	11.10 -	62	K7M 718
1.6	02.09 -	64	K7M 710
1.6	12.07 -	75	K7M 710
Lada Largus Combi (R90) 1.6i 8V	07.12 - 10.15	62	K7M
Largus Furgon (F90) 1.6i 8V	07.12 - 10.15	62	K7M

T931C K534 80 80 80 85 85 90 90 90 K535 80 alternative T087B

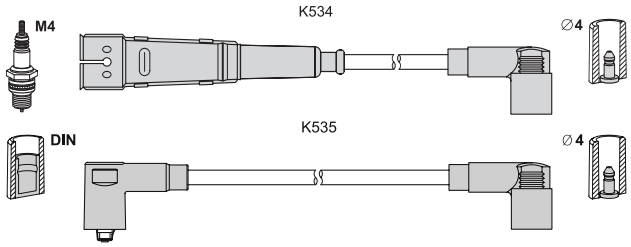

Mercedes 450 SE (W116) 4.5	12.75 - 04.80	160	M 117.986/_.985
450 SEL (W116) 6.9	07.75 - 03.80	210	M 100.985
450 SL (R107) 4.5	09.75 - 10.80	160	M 117.985/_.982
450 SLC (C107) 4.5	09.75 - 08.79	160	M 117.985/_.982
450 SLC (C107) 5.0	06.78 - 02.80	177	M 117.960

T932C K534 95 95 100 100 110 110 110 110 K535 100 alternative T001B

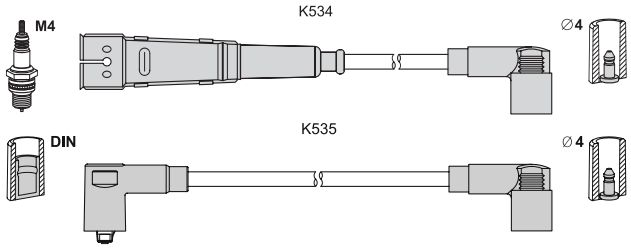

Mercedes 380 SE (W126) 3.8	12.79 - 08.85	150	M 116.963
3.8	12.85 - 12.86	160	M 116.961
380 SEC (C126) 3.8	10.81 - 07.85	150	M 116.963
380 SL (R107) 3.8	09.80 - 08.85	150	M 116.962
3.8	09.80 - 08.81	160	M 116.960
380 SLC (C107) 3.8	07.80 - 08.81	160	M 116.960
500 SE,SEL (W126) 5.0	12.79 - 08.85	170	M 117.961/_.963
5.0	12.79 - 08.85	177	M 117.961/_.963
500 SEC (C126) 5.0	10.81 - 08.85	170	M 117.963
500 SL (R107) 5.0	05.80 - 12.85	170	M 117.960
5.0	05.80 - 12.81	177	M 117.960
5.0	01.86 - 08.89	180	M 117.964/_.960

T 933B ▶

T933B K151 35 45 55 60 K076 45

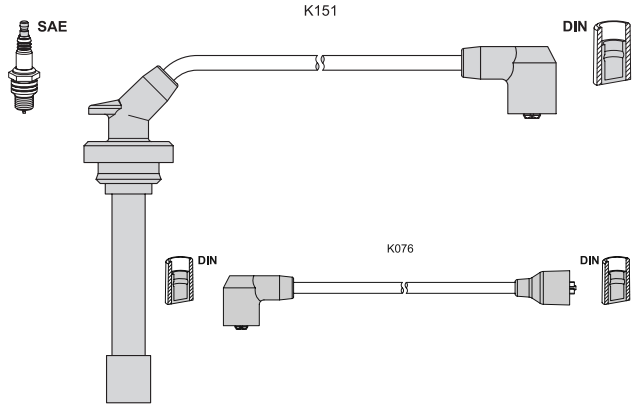

Daihatsu Feroza H. Top 1.6 16V	10.88 -	63	HDC
1.6 i 16V	10.88 -	70	HD-E
Feroza Soft Top 1.6 16V	10.88 -	63	HDC
1.6 i 16V	10.88 -	70	HD-E

T934B K267 40 50 55 70 K062 40

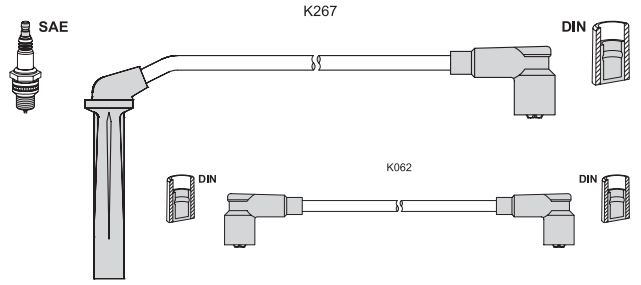

Saab 900 I 2.0 S Turbo 16V	07.91 - 12.93	104	B202S
900 I Cabrio 2.0 S Turbo 16V	09.91 - 06.94	104	B202S
900 I Combi 2.0 S Turbo 16V	09.91 - 07.93	104	B202S
9000 2.0 16V CD	09.93 - 12.98	110	B204S/B204E
2.0 16V Turbo	05.88 - 08.93	118	B202XL
2.0 16V Turbo	04.85 - 12.91	129	B202XL
2.0 16V Turbo CD	09.88 - 08.93	120	B202XL
2.0 16V Turbo CD	09.89 - 12.98	136	B202L
2.3	09.90 - 10.98	165	B234R
2.3 16V CD Turbo	07.90 - 12.98	147	B234L
2.3 16V CDE Eco-Power	09.93 - 12.98	125	B234E
2.3 16V Turbo	09.90 - 08.93	143	B234L
9000 CC 2.0 16V ND Turbo	09.93 - 12.98	110	B202S
2.0 16V Turbo	09.84 - 08.93	118	B202XL
2.0 16V Turbo	05.88 - 08.93	120	B202XL
2.0 16V Turbo	09.84 - 12.91	129	B202XL
2.0 16V Turbo CS	09.88 - 12.98	136	B202L
2.3 16V Aero CS	02.93 - 12.98	162	B234R
2.3 16V Aero CS	02.93 - 12.98	165	B234R
2.3 16V CSE Eco Power	09.93 - 12.98	125	B234E
2.3 16V Turbo	09.90 - 12.98	143	B234L
2.3 16V Turbo CSE	09.93 - 12.98	147	B234L

T935B K266 30 40 50 60 K061 45

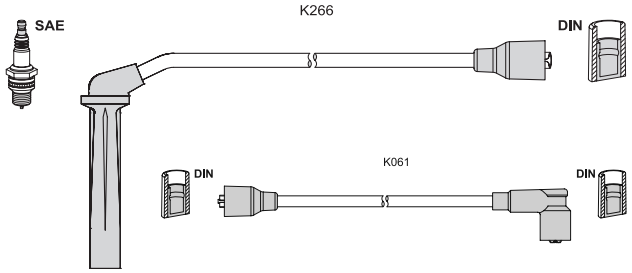

Saab 900 I (AC4, AM4) 2.0 16V	01.86 - 12.88	92	B202XI
2.0 16V	01.89 - 12.93	93	B202I
2.0 Turbo 16V	11.85 - 12.93	118	B202XL
2.0 S Turbo 16V	01.84 - 12.88	129	B202XL
2.0 S Turbo 16V cat	01.89 - 12.93	129	B202XL
900 I Cabriolet 2.0 16V	01.90 - 06.94	93	B202I
2.0 Turbo 16V	11.86 - 06.94	118	B202XL
2.0 Turbo 16V	11.86 - 06.94	129	B202XL
900 I Combi-Coupe 2.0 16V	01.86 - 12.88	92	B202XI
2.0 16V	01.89 - 08.92	93	B202I
2.0 Turbo 16V	11.85 - 06.94	118	B202XL
2.0 S Turbo 16V	02.84 - 12.88	129	B202XL
2.0 S Turbo 16V cat	01.89 - 12.93	125	B202XL
9000 2.0 16V	01.89 - 01.93	94	B202I
9000 CC 2.0 16V	12.85 - 12.88	92	B202XI
2.0 16V	12.85 - 08.88	94	B202XI
2.0 16V CS	01.89 - 12.98	94	B202I
2.0 16V Turbo	06.89 - 12.92	127	B202

T936B K267 35 50 50 70 K060 35

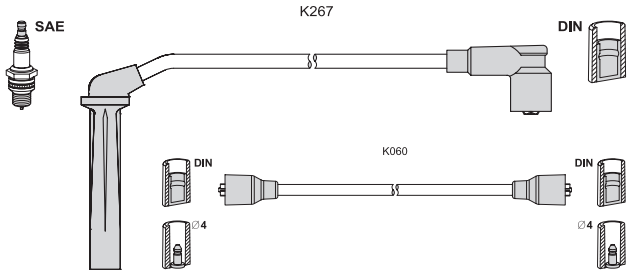

Saab 900 I 2.0 S Turbo 16V	07.91 - 12.93	104	B202S
2.0 S Turbo 16V	01.92 - 12.93	107	B202S
2.1 16V	08.90 - 12.93	100	B212I
900 I Cabrio 2.0 S Turbo 16V	09.91 - 06.94	104	B202S
2.1 16V	08.90 - 06.94	100	B212I
900 I Combi 2.0 S Turbo 16V	09.91 - 07.93	104	B202S
2.1 16V	09.90 - 07.93	100	B212I
9000 2.0 16V CD	09.93 - 12.98	96	B204I
2.0 16V Turbo CD	09.92 - 12.98	108	B204E
9000 CC 2.0 16V CS	09.93 - 12.98	96	B204I
2.0 16V ND Turbo	09.93 - 12.98	110	B204E

T938B K266 60 55 40 30 K062 30

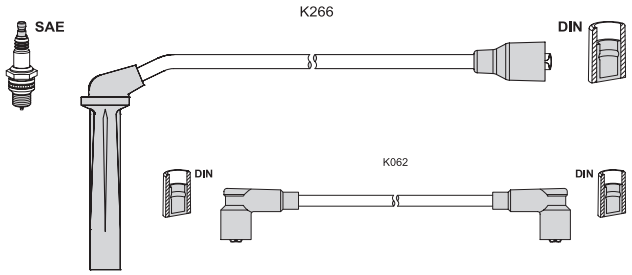

< T938B			
Saab 900 I Combi 2.0 Turbo 16V	01.93 - 06.94	132	B202L
900 II 2.0 16V Turbo	07.93 - 02.98	136	B204L
900 II Cabrio 2.0 16V Turbo	12.93 - 02.98	136	B204L
900 II Coupe 2.0 16V Turbo	12.93 - 02.98	136	B204L
9000 2.3 16V CD	08.89 - 12.98	107	B234I
2.3 16V CDE	09.93 - 12.98	108	B234I
9000 Hatchback 2.3 16V CS	09.89 - 12.98	107	B234I
2.3 16V CSE	09.93 - 12.98	108	B234I

T940C K084 45 50 60 75 80 90 - alternative T029B

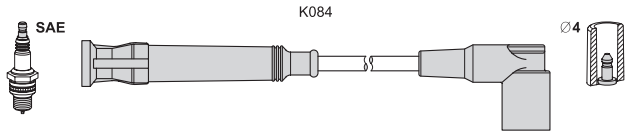

BMW 635 CSi (E24) 3.5	06.78 - 08.88	160	M30 B35
3.5	08.87 - 05.89	155	M30 B35
3.5	01.85 - 05.89	136	M30 B35
733 i (E23) 3.2	05.77 - 09.79	145	M30 B32
735 i (E23) 3.5	01.85 - 08.86	136	M30 B35
3.5	09.79 - 08.86	160	M30 B35
3.5	04.85 - 08.86	141	M30 B35

T941C K082 45 50 65 80 80 K090 40 alternative T020B

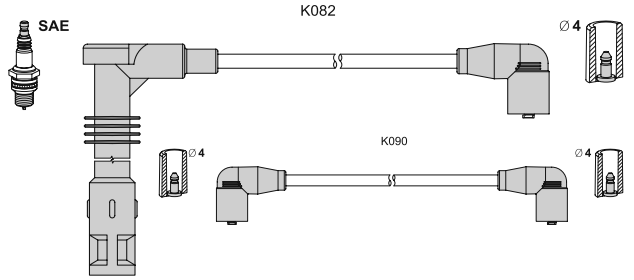

Audi 90 2.0 20 V	08.89 - 07.91	118	NM
2.0 20 V quattro	08.88 - 09.91	118	NM
2.3 E 20V	04.90 - 07.91	123	7A
2.3 E 20V	08.88 - 07.91	125	7A
2.3 E 20V quattro	06.88 - 09.91	125	7A
2.3 E 20V quattro	04.90 - 09.91	123	7A
Coupe (89, 8B) 2.0 20 V	08.89 - 07.91	118	NM
2.0 20 V quattro	08.89 - 07.91	118	NM
2.3 E 20V	08.90 - 07.91	123	7A
2.3 E 20V	08.89 - 07.91	125	7A
2.3 E 20V quattro	11.88 - 07.91	125	7A
2.3 E 20V quattro	05.90 - 12.96	123	7A

T942C K088 30 40 50 60 K131 65 alternative T067B

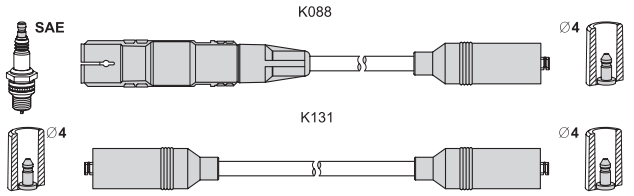

Seat Alhambra 2.0 i	04.96 - 03.10	85	ADY
VW Sharan 2.0	09.95 - 03.10	85	ATM

T944B K601 77 84 84 96 K602 36 original T590C

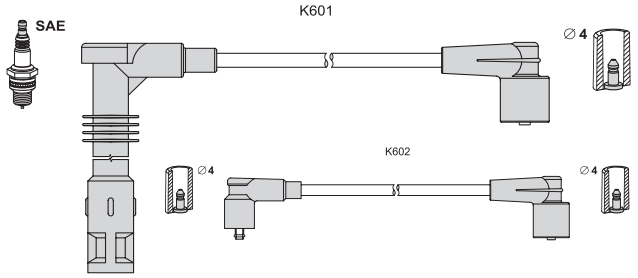

application → T590C (original)

T945B K601 80 80 85 85 K602 30 original T591C

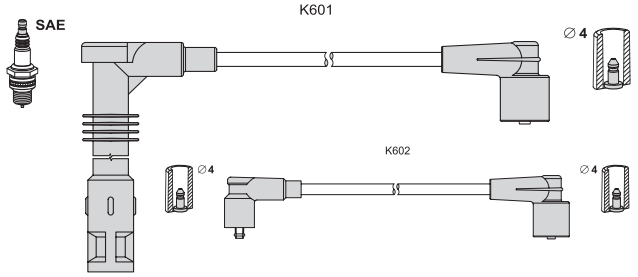

application → T591C (original)

T946B K012 60 50 50 40 K061 70

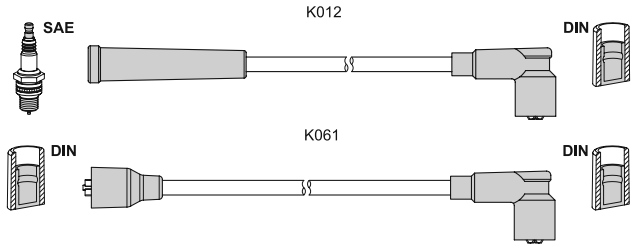

Nissan Terrano I 2.4 i 4WD	10.87 - 02.93	76	Z24i
Terrano II 2.4 i 12V 4WD	02.93 - 06.96	91	KA24E

T948B K012 60 70 90 70 80 90 K061 50

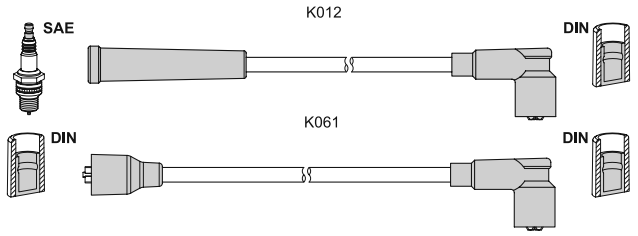

Nissan Patrol Hardtop 3.0	03.89 - 10.93	109	
Patrol St. Wagon 3.0 4x4	03.89 - 10.93	109	

T949B K405 53 38 33 28 -

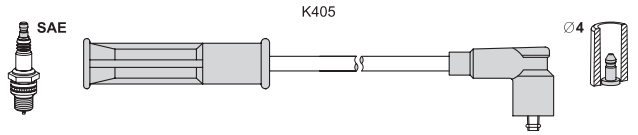

Renault Kangoo (KC0/1_) 1.4	08.97 -	55	E7J _ / K7J _
Kangoo Express 1.4	08.97 -	55	E7J _ / K7J _
Laguna (B56_, 556_) 1.6 16V	11.97 - 03.99	79	K4M 720
Laguna Grandtour 1.6 16V	11.97 - 03.99	79	K4M 720
Megane I (BA0/1_) 1.4 e	02.99 - 08.03	55	E7J 626

T 949B ▶

< T949B			
Renault Megane I (BA0/1_) 1.6 e	03.97 - 07.98	66	K7M 702/703/790
1.6 i	03.97 - 07.98	55	K7M 720
Megane I Cabrio (EA) 1.6 e	04.97 - 07.98	66	K7M 702/K7M 703
Megane I Classic (LA) 1.4	02.99 - 08.03	55	E7J 626
1.6 e	03.97 - 07.98	66	K7M 702/703/790
1.6 i	03.97 - 07.98	55	K7M 720
Megane I Coach (DA) 1.6 e	03.97 - 07.98	66	K7M 702/K7M 703
Megane I Grandtour 1.4 e	03.99 - 08.03	55	E7J 626
1.6 e	03.99 - 08.03	66	K7M 702/K7M 703
Megane Scenic 1.6 e	04.97 - 07.98	66	K7M 702/K7M 703
1.6 i	04.97 - 07.98	55	K7M 720

T950C K116 75 60 65 45 60 30 - alternative T992B

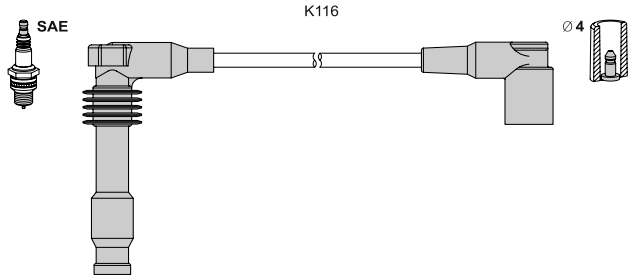

Opel/Vauxhall Omega B 2.5 V6	03.94 - 09.00	125	X 25 XE
3.0 V6	04.94 - 02.01	155	X 30 XE
Omega B Caravan 2.5 V6	03.94 - 09.00	125	X 25 XE
3.0 V6	04.94 - 02.01	155	X 30 XE
Sintra 3.0 i 24V	11.96 - 04.99	148	X 30 XE

T951C K116 80 60 70 45 55 40 - alternative T993B

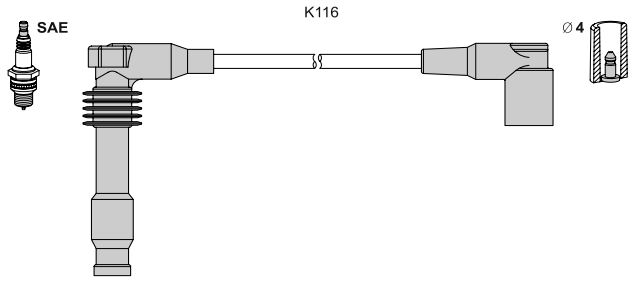

Opel/Vauxhall Calibra A 2.5 i V6	04.93 - 07.97	125	X 25 XE/C 25 XE
Vectra A 2.5 CD 4x4	08.92 - 08.95	125	C 25 XE
2.5 16V	02.93 - 11.95	125	C 25 XE
Vectra A CC 2.5 V6	02.93 - 11.95	125	C 25 XE
Vectra B (36_) 2.5 i V6	10.95 - 09.00	125	X 25 XE
i 500 2.5	05.98 - 09.00	143	X 25 XE
Vectra B Caravan 2.5 i V6	11.96 - 09.00	125	X 25 XE
i 500 2.5	05.98 - 09.00	143	X 25 XE
Vectra B CC (38_) 2.5 i V6	10.95 - 09.00	125	X 25 XE

T952C K265 70 50 40 30 K091 30 alternative T068B

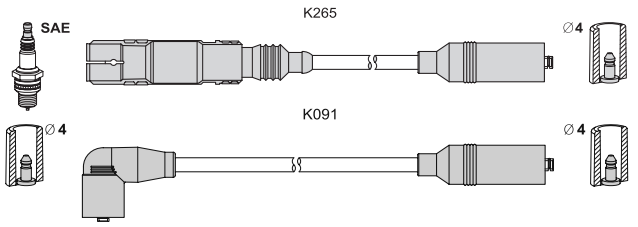

Audi A4 (8D2, B5) 1.6	11.94 - 10.00	74	ADP
A4 Avant (8D5, B5) 1.6	11.94 - 09.01	74	ADP
VW Passat (3B2) 1.6	10.96 - 11.00	74	ADP
Passat Variant (3B5) 1.6	06.97 - 11.00	74	ADP

T954B K601 77 77 84 96 K602 48 original T592C

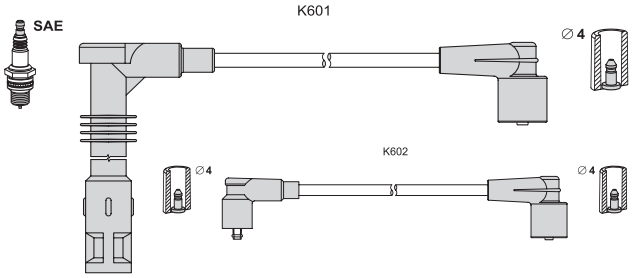

application → T592C (original)

T957B K569 30 35 51 56 K439 36

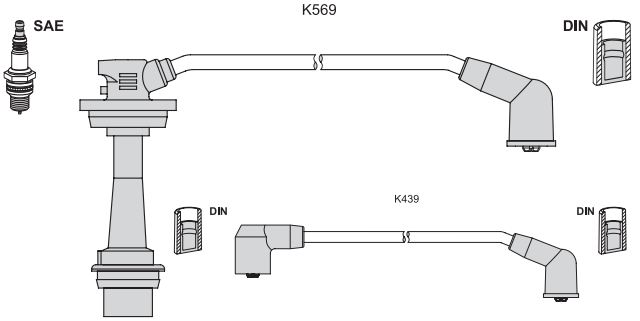

Suzuki Swift I (AA) 1.3 GTi/GXi	08.85 - 03.89	74	G13B
Swift II CC 1.3 GTi	03.89 - 05.01	74	G13B
Swift II Sedan 1.3	03.89 - 12.91	52	G13A

T958C K469 108 85 73 K504 77 64 48 K100 54

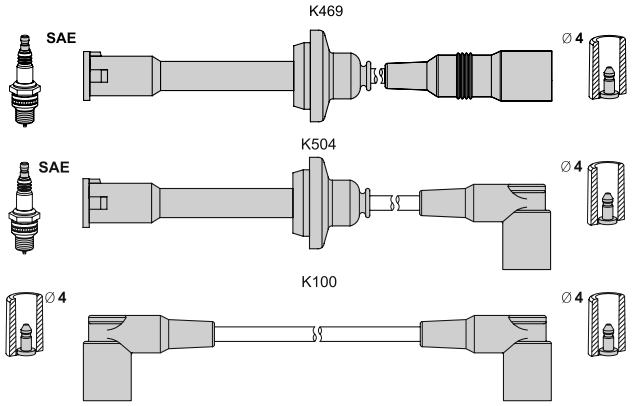

Alfa Romeo 164 2.0 V6 Turbo	03.91 - 09.92	150	AR 64101
2.0 V6 Turbo	09.92 - 09.98	148	AR 64102

T959B K165 45 55 65 75 K068 65

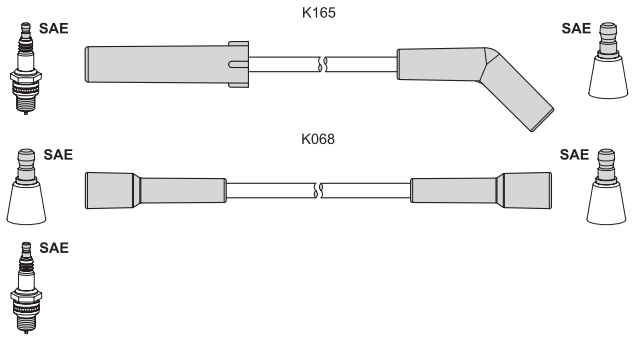

Citroen XM (Y3) 2.0	05.89 - 04.94	84	
2.0 i	05.89 - 04.94	79	RDZ (XU10MZ)
XM Break (Y3) 2.0	10.91 - 07.94	85	

< T959B			
Citroen XM Break (Y3) 2.0 i	11.91 - 04.94	79	RDZ / XU102C
Peugeot 605 (6B) 2.0	02.90 - 09.99	79	
2.0	06.89 - 09.99	84	R5A (XU102C)
2.0	06.89 - 09.90	89	RFZ (XU10J2Z)

T960B K334 33 33 33 40 -

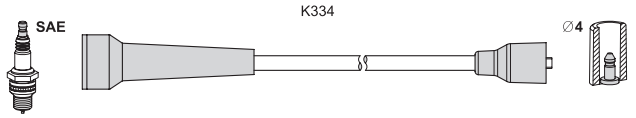

Renault Espace III (JE0_) 2.0	04.97 - 10.00	84	F3R 769/728/768
Laguna I (B56_, 556_) 1.8	04.97 - 03.01	66	F3P 670
1.8	04.97 - 02.01	69	F3P 674
2.0	04.97 - 02.01	84	F3R 768
Laguna Grandtour 1.8	04.97 - 03.01	66	F3P 670
Megane I (BA0/1_) 2.0 i	03.99 - 08.03	80	F3R 751/F3R 750
2.0 i	01.96 - 08.03	84	F3R 751/F3R 750
Megane I Cabriolet 2.0	04.97 - 08.03	84	F3R 750
2.0 i	03.99 - 08.03	80	F3R 791/F3R 796
Megane I Classic 2.0 i	03.99 - 08.03	80	F3R791/751/797/798
2.0 i	04.97 - 08.03	84	F3R791/751/797/798
Megane I Coach 2.0 i	03.99 - 08.03	80	F3R 791/F3R 796
2.0 i	04.97 - 08.03	84	F3R 751/F3R 750
Megane Scenic 2.0 i	01.99 - 09.99	80	F3R 796
2.0 i	04.97 - 09.99	84	F3R 751/F3R 750
2.0 RXE 4x4	05.97 - 10.99	84	F3R 750

T962B K169 70 60 50 40 K066 50

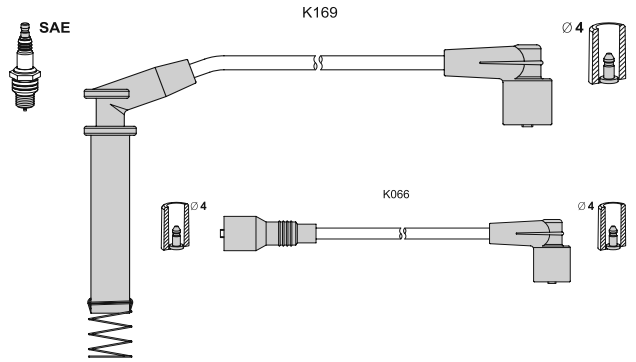

Opel/Vauxhall Astra F 1.4	09.91 - 09.93	55	14 NV
1.4 i	11.94 - 09.98	44	C 14 NZ/X 14 NZ
Astra F Caravan 1.4	09.91 - 09.93	55	14 NV
1.4 i	09.91 - 01.98	44	C 14 NZ
Astra F CC 1.4	09.91 - 09.93	55	14 NV
1.4	09.92 - 01.98	60	14 SE
1.4 i	11.94 - 01.98	44	C 14 NZ
Astra F Van (55_) 1.4 i	10.91 - 01.99	44	C 14 NZ
Combo (71_) 1.2	07.94 - 10.01	33	C 12 NZ/X 12 SZ
Corsa A CC 1.2 i	09.89 - 03.93	33	C 12 NZ
1.4 Si	09.91 - 03.93	60	C 14 SE
Corsa A TR 1.2 i	09.89 - 03.93	33	C 12 NZ
1.4 i	10.89 - 03.93	44	C 14 NZ
1.4 S	09.89 - 03.93	53	14 NV
Corsa B 1.2 i	03.93 - 09.00	33	C 12 NZ
1.2 i	03.93 - 09.00	33	12 NZ
1.4 i	03.93 - 09.00	44	C 14 NZ
Vectra A (86_, 87_) 1.4 S	09.88 - 06.92	55	14 NV
1.6	09.88 - 05.93	60	16 SV
1.6 i	09.88 - 11.95	55	C16 NZ / E16 NZ
Vectra A CC 1.4 S	04.88 - 06.92	55	14 NV
1.6 i cat	09.88 - 11.95	55	C 16 NZ
1.6 S	09.88 - 05.93	60	16 SV

< T962B			
Opel Kadett E (39_, 49_) 1.4 i	01.90 - 08.91	44	C 14 NZ
1.4 S	01.90 - 08.91	55	14 NV
1.6 S	09.86 - 08.91	60	16 SV
Kadett E Cabriolet 1.4 i	01.90 - 08.91	44	C 14 NZ
1.4 S	08.90 - 02.93	55	14 NV
1.6 i	07.89 - 02.93	60	16 SV
Kadett E Caravan 1.4 i	09.86 - 08.91	60	16 SV
1.4 S	01.90 - 08.91	44	C 14 NZ
1.6	01.90 - 08.91	55	14 NV
Kadett E CC 1.4 i	01.90 - 08.91	44	C 14 NZ
1.4 S	01.90 - 08.91	55	14 NV
1.6 S	09.86 - 08.91	60	16 SV
Kadett E Combo 1.4 i	08.91 - 07.94	44	C 14 NZ
1.4 S	07.89 - 08.91	55	14 NV
1.6	09.86 - 12.91	60	16 SV
Kadett E Van 1.4 i	01.90 - 08.91	44	C 14 NZ
1.8 i	08.84 - 09.92	66	C 18 NT

T963B K153 25 35 45 55 K061 30

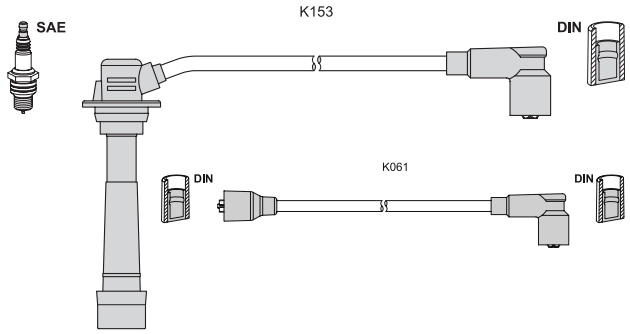

Mazda 323 III (BF) 1.6 GLX	06.86 - 03.87	54	B68
1.6 GT Turbo	10.85 - 11.91	103	B6T
323 III Hatchback (BF) 1.6	09.87 - 10.89	54	B68
1.6 GT Turbo	10.85 - 08.93	103	B6T
1.6 GT Turbo 4WD	10.87 - 11.91	103	B6T
1.6 GT Turbo 4WD	08.87 - 10.89	110	
323 III Station Wagon 1.6	09.87 - 10.89	54	B68

T964B K168 35 45 55 60 K061 60

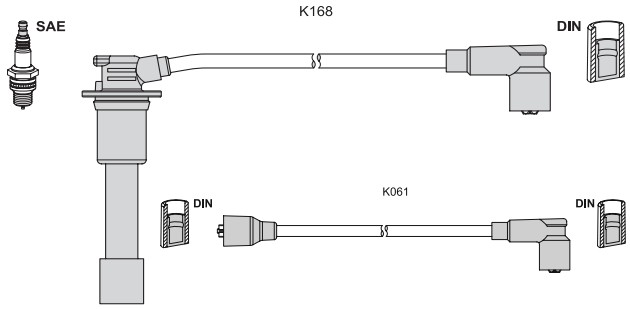

Mazda 323 C IV (BG) 1.8 16V	09.89 - 03.93	103	BP22/BP31
1.8 16V GT	09.89 - 03.93	94	BP (DOHC)
1.8 16V Turbo 4WD	09.90 - 12.92	120	BP Turbo
1.8 16V Turbo 4WD	01.93 - 07.94	136	BP Turbo
323 F IV (BG) 1.8 16V	09.89 - 03.93	103	BP31
1.8 16V GT	08.89 - 07.94	94	BP (DOHC)
323 S IV (BG) 1.8 16V GT	06.89 - 07.94	94	BP (DOHC)
1.8 16V Turbo 4WD	01.91 - 07.94	120	BP Turbo

T 965G ▶

T965G K185 15 25 35 45 -

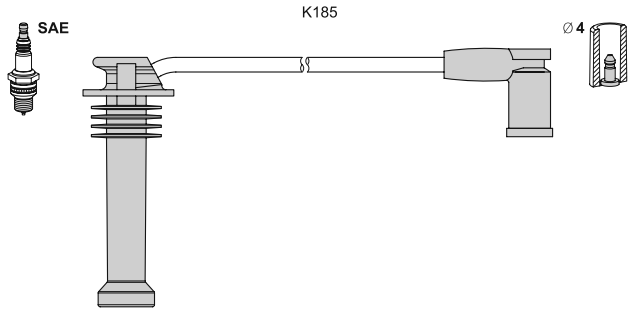

Ford Fiesta V (J_ _) 2.0 ST150	03.05 -	110	N4JB
Mondeo III (B5Y) 1.8 16V	11.00 - 08.07	81	CGBB/CGBA
1.8 16V	11.00 - 08.07	92	CHBA/CHBB
2.0 16V	11.00 - 08.07	107	CJBA/CJBB
Mondeo III Combi 1.8 16V	11.00 - 08.07	81	CGBB/CGBA
1.8 16V	11.00 - 08.07	92	CHBA/CHBB
2.0 16V	11.00 - 08.07	107	CJBA/CJBB
Mondeo III Sedan 1.8 16V	11.00 - 08.07	81	CGBB/CGBA
1.8 16V	11.00 - 08.07	92	CHBA/CHBB
2.0 16V	11.00 - 08.07	107	CJBA/CJBB

T966B K012 65 K031 50 40 35 -

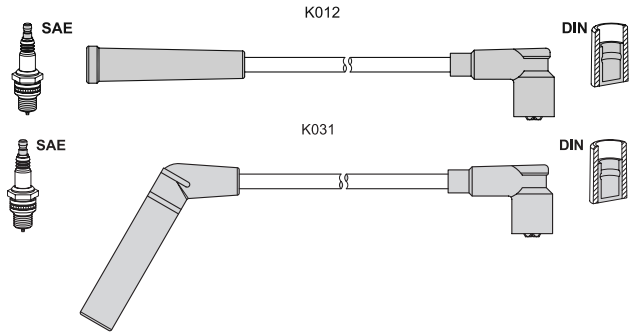

Toyota Corolla (_E8_) 1.3	10.84 - 08.87	55	2E-LC/2E-L
Corolla (_E9_) 1.3 i	08.87 - 12.92	55	2E-E/2E
Corolla Compact (E9) 1.3	08.87 - 12.89	55	2E
Corolla FX Comp. (E8B) 1.3	08.85 - 08.87	55	2E-L
Corolla Liftback (_E8_) 1.3	01.85 - 08.87	55	2E-LC/2E-L
Corolla Liftback (E9)1.3 i	08.87 - 04.92	55	2E-E/2E
Corolla St. Wagon (E9) 1.3	12.87 - 12.89	55	2E
1.3 i	06.89 - 06.92	55	2E-E
Starlet (_P7_) 1.3	10.84 - 12.89	55	2E-LC
Starlet (_P8_) 1.3 12V	12.89 - 03.96	55	2E-E
1.3 12V cat	12.89 - 12.92	55	2E-E/2E

T967B K132 10 25 + + -

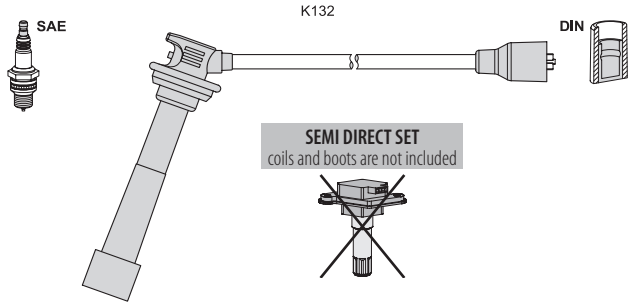

Subaru Justy II 1.3 4x4	04.01 - 11.03	63	G13BB
Suzuki Alto IV (FF) 1.1	06.02 - 12.08	46	F10DN/F10D
Baleno (EG) 1.3	02.99 - 05.02	52	G13BA
1.3 i 16V	02.99 - 05.02	63	G13BB

< T967B

Suzuki Baleno (EG) 1.6 i 16V	02.99 - 05.02	72	G16B
1.6 i 16V 4x4	02.99 - 05.02	72	G16B
Baleno CC (EG) 1.3	09.96 - 05.02	52	G13BA
1.3 i 16V	02.99 - 05.02	63	G13BB
1.6 i 16V	02.99 - 05.02	72	G16B
1.6 i 16V 4x4	02.99 - 05.02	72	G16B
Baleno Combi 1.3 16V	02.99 - 05.02	63	G13BB
1.6 i 16V	02.99 - 05.02	72	G16B
1.6 i 16V	02.99 - 05.02	73	
1.6 i 16V 4x4	02.99 - 05.02	72	G16B
1.6 i 16V 4x4	02.99 - 05.02	73	G16B
Carry Van (FD) 1.3	03.99 -	58	G13BB
1.3 16V	03.00 -	58	G13BB
Grand Vitara I (FT, GT) 1.6	03.98 - 07.03	69	G16B
Jimny (FJ) 1.3 16V	09.98 -	59	G13BB
1.3 16V 4WD	09.98 -	59	G13BB
Wagon R+ (MM) 1.3	05.00 -	56	G13BB
1.3 4WD	10.01 -	56	G13BB

T968P K156 35 40 55 60 -

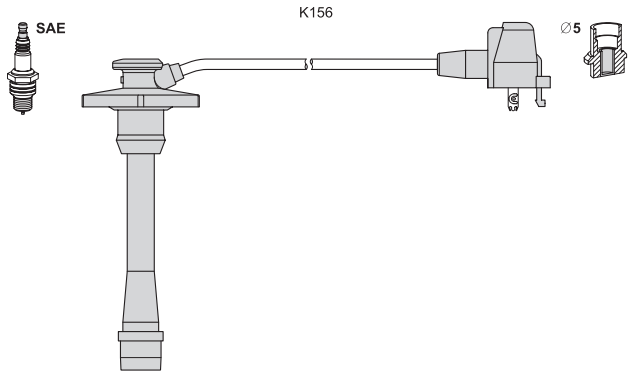

Toyota Corolla (_E10_) 1.3 XLI	09.95 - 04.97	55	4E-FE
1.3 XLI 16V	07.92 - 09.95	65	4E-FE
Corolla Compact 1.3 XLI	09.95 - 04.97	55	4E-FE
1.3 XLI	07.92 - 09.95	65	4E-FE
Corolla Liftb. (E10) 1.3 XLI	07.92 - 04.97	65	4E-FE
Corolla Wagon (E10) 1.3 XLI	09.95 - 04.97	55	4E-FE
1.3 XLI 16V	07.92 - 09.95	65	4E-FE

T969B K052 30 37 40 58 -

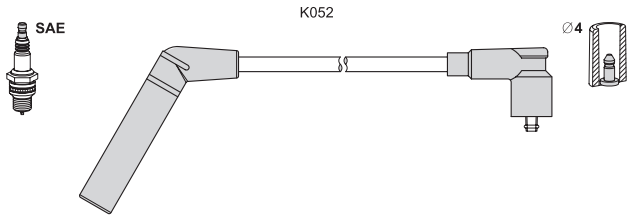

Proton Gen 2 (CM) 1.3	06.04 -	70	S4PE
1.6	06.04 -	82	S4PH
Wira 1.3	08.00 -	55	4 G13
1.5	08.00 -	64	4 G15
Wira Hatchback 1.3	08.00 -	55	4 G13
1.5	08.00 -	64	4 G15M

T970B K174 65 65 55 K062 40

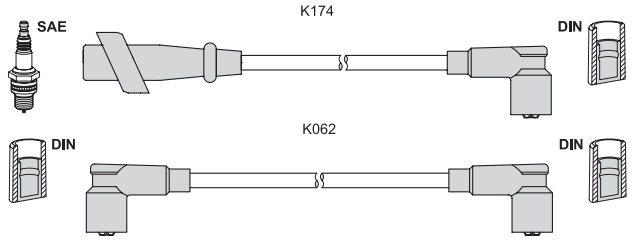

Suzuki Swift I (AA) 1.0	10.83 - 03.89	37	G10A /G10
Swift II (EA, MA) 1.0	03.89 - 05.01	37	G10A
1.0 i	09.91 - 05.01	39	G10A
1.0 i	03.89 - 12.91	40	G10A

T971C K593 80 85 85 85 85 90 100 100 K444 65 alternative T058B

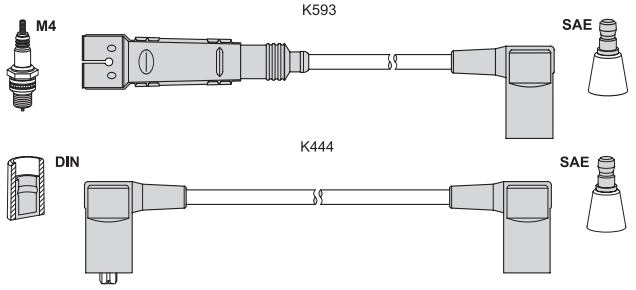

Mercedes 420 SE (W126) 4.2	10.85 - 06.91	150	M 116.965
4.2	10.85 - 12.87	160	M 116.965
4.2	10.85 - 06.91	165	M 116.965
4.2	10.85 - 12.87	170	M 116.965
500 SE,SEL (W126) 5.0	09.85 - 06.91	164	M 117.965
5.0	09.85 - 06.91	180	M 117.965
5.0	09.87 - 06.91	185	M 117.965
5.0	09.87 - 06.91	195	M 117.965
500 SE,SEL cat (W126) 5.0	06.89 - 06.91	185	M 117.965
560 SE,SEL (W126) 5.6	10.85 - 06.91	178	M 117.968
5.6	10.85 - 12.87	200	M 117.968
5.6	08.87 - 06.91	205	M 117.968
5.6	10.85 - 06.91	220	M 117.968
420 SEC (C126) 4.2	10.85 - 06.91	150	M 116.965
4.2	10.85 - 12.87	160	M 116.965
4.2	10.85 - 06.91	165	M 116.965
500 SEC (C126) 5.0	10.85 - 06.91	164	M 117.965
5.0	09.85 - 06.91	180	M 117.965
5.0	08.87 - 06.91	185	M 117.965
5.0	09.85 - 06.91	195	M 117.965
500 SEC cat (C126) 5.0	06.89 - 06.91	185	M 117.965
560 SEC (C126) 5.6	10.85 - 06.91	178	M 117.968
5.6	10.85 - 12.87	200	M 117.968
5.6	10.85 - 06.91	205	M 117.968
5.6	10.85 - 12.89	220	M 117.968
420 SL (R107) 4.2	01.86 - 08.89	150	M 116.964
4.2	01.86 - 08.89	160	M 116.964
500 SL (R107) 5.0	01.86 - 08.89	164	M 117.964

T972G K374 14 19 31 37 -

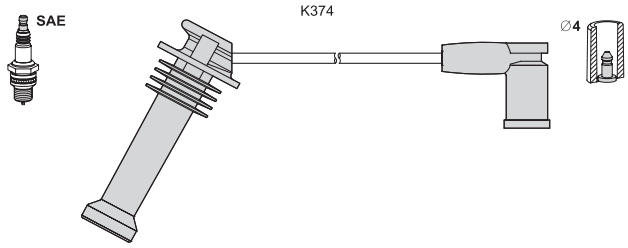

Ford B-MAX (JK) 1.4	10.12 -	66	SPJD
1.4 LPG	08.13 -	63	RTJC
1.4 LPG	08.13 -	66	RTJC
1.6 Ti	10.12 -	77	IQJA
B-MAX Van 1.4	10.12 -	66	SPJD
1.6 Ti	10.12 -	77	IQJA
C-MAX 1.6	02.07 - 09.10	74	SHDA/_DB/_DC/HW_
C-MAX II 1.6 Flexifuel	02.11 -	88	MUDA
1.6 LPG	02.12 -	88	MUDA
1.6 Ti	12.10 -	63	XTDA
1.6 Ti	12.10 -	77	IQDB/IQDA
1.6 Ti	02.12 -	88	MUDA
1.6 Ti	12.10 -	92	PNDA
C-MAX II (DX_) 1.6 LPG	02.12 -	86	MUDA
Fiesta V (JH_, JD_) 1.4 16V	11.01 -	59	FXJB/FXJA
1.6 16V	11.01 -	74	FYJA/FYJB
Fiesta VI 1.25	10.08 -	44	STJA/STJB
1.25	10.08 -	60	SNJA/SNJB
1.4	10.08 -	71	SPJA/SPJC
1.4 LPG	01.09 -	71	RTJA/RTJB
1.6 Ti	09.12 -	77	IQJA
1.6 Ti	10.08 -	88	HXJB/HXJA
1.6 Ti	12.10 -	99	U5JA
Fiesta Van 1.25	01.09 -	60	SNJA/SNJB
Focus II (DA_) 1.4	11.04 -	59	ASDB/ASDA
1.6	11.04 -	74	SHDA/HWDB/HWDA
1.6 LPG	10.09 -	85	SIDA
1.6 Ti	11.04 -	85	HXDB/HXDA
Focus II Cabriolet 1.6	10.06 -	74	HWDB/HWDA
Focus II Combi (DA_) 1.4	11.04 -	59	ASDB/ASDA
1.6	11.04 -	74	SHDA/HWDB/HWDA
1.6 LPG	10.09 -	85	SIDA
1.6 Ti	11.04 -	85	HXDB/HXDA
Focus II Sedan (DA_) 1.4	04.05 -	59	ASDB/ASDA
1.6	04.05 -	74	SHDA/HWDB/HWDA
1.6 Ti	04.05 -	85	HXDB/HXDA
Focus III 1.6 Flexifuel	04.11 -	88	MUDA
1.6 LPG	02.12 -	88	MUDA
1.6 LPG	02.12 -	86	MUDA
1.6 Ti	08.11 -	63	XTDA
1.6 Ti	04.11 -	77	IQDB
1.6 Ti	02.12 -	88	MUDA
1.6 Ti	04.11 -	92	PNDA
Focus III Sedan 1.6 Flexifuel	04.11 -	88	MUDA
1.6 Ti	08.11 -	63	XTDA
1.6 Ti	04.11 -	77	IQDB
1.6 Ti	04.11 -	92	PNDA
Focus III Turnier 1.6 Flexifuel	05.11 -	88	MUDA
1.6 LPG	02.12 -	88	MUDA
1.6 LPG	02.12 -	86	MUDA
1.6 Ti	08.11 -	63	XTDA
1.6 Ti	05.11 -	77	IQDB
1.6 Ti	02.12 -	88	MUDA
1.6 Ti	05.11 -	92	PNDA
Focus C-MAX 1.6	10.03 - 03.07	74	HWDB/HWDA
1.6 Ti	08.04 - 03.07	85	SIDA/HXDA

T 972G ▶

< T972G			
Ford Fusion (JU_) 1.4	08.02 -	59	FXJC/FXJB/FXJA
1.6	08.02 -	74	FYJA/FYJB
Grand C-MAX 1.6 Ti	12.10 -	77	IQDB/IQDA
1.6 Ti	12.10 -	92	PNDA
Mondeo IV 1.6 Ti	03.07 -	81	RHBA
1.6 Ti	03.07 -	92	PNBA
1.6 Ti	07.10 -	88	KGBA
Mondeo IV Sedan 1.6 Ti	03.07 -	92	PNBA
Mondeo IV Turnier 1.6 Ti	03.07 -	81	RHBA
1.6 Ti	03.07 -	92	PNBA
1.6 Ti	07.10 -	88	
Puma (EC) 1.7 ST160	05.00 - 06.02	118	
Mazda 2 (DY) 1.25	04.03 -	55	FUJA
1.4	04.03 -	59	FXJA
1.6	04.03 -	74	FYJA

T973P K617 27 40 45 + + + -

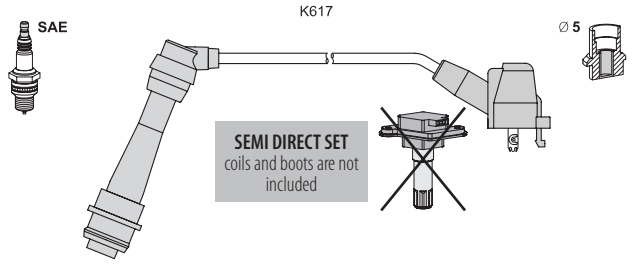

Lexus GS 300 (JZS160) 3.0	10.00 - 12.04	161	2JZ-GE
3.0	08.97 - 10.00	163	2JZ-GE
IS I 300 3.0	08.97 - 10.00	157	2JZ-GE
IS Sportcross 300 3.0	10.01 - 10.05	157	2JZ-GE

T974B K106 55 65 70 80 K078 20

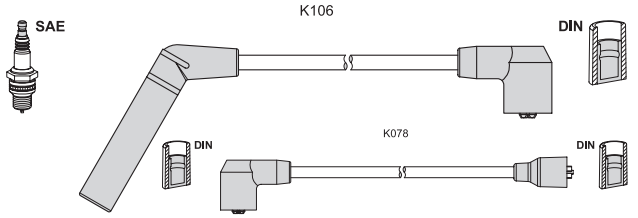

Mitsubishi Galant III 2.4 GLS	07.85 - 04.90	82	G64B
Galant IV (E3_A) 2.0	04.89 - 10.92	80	4G63 (SOHC 8V)
2.0 4WD	04.89 - 10.92	80	4G63 (SOHC 8V)
Galant IV Sedan 2.0	11.87 - 10.92	80	4G63 (SOHC 8V)
2.0 4WD	12.88 - 10.92	80	4G63 (SOHC 8V)
2.0 GTi 16V 4WD	09.91 - 10.92	110	4G63 (DOHC 16V)
L 300 Bus (P_ _W) 2.4	11.90 -	82	4G64 (12V)
2.4	08.88 - 08.97	82	4G64 (8V)
2.4 4WD	11.86 - 12.90	80	G64B
2.4 4WD	11.90 -	82	4G64 (12V)
2.4 GLX 4WD	11.86 - 08.97	82	4G64 (8V)
L 300 Van 2.4	11.86 - 08.97	82	4G64 (8V)/G64B
2.4 4WD	11.86 - 08.97	82	4G64 (8V)/G64B

T975B K175 61 61 K176 62 62 -

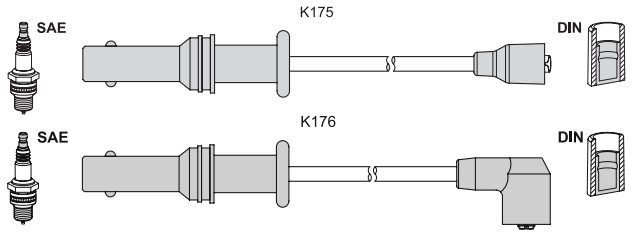

Subaru Forester (SF) 2.0	08.97 - 09.02	90	EJ20
Impreza Coupe (GFC) 1.6	12.96 - 06.97	66	EJ16E
1.6 4WD	12.96 - 06.97	66	EJ161
2.0	11.95 - 06.97	85	EJ20E
2.0 4WD	12.95 - 06.97	85	EJ20
Impreza Sedan (GC) 1.6 i	08.92 - 06.98	66	EJ16
1.6 i 4WD	08.92 - 06.97	66	EJ16
1.8	11.95 - 06.96	76	EJ18E
1.8 i 4WD	08.92 - 12.00	76	EJ18/EJ18E
2.0 i 4WD	10.95 - 06.97	85	EJ20
Impreza Stat. Wagon 1.6	01.93 - 06.97	66	EJ16E
1.6 i 4WD	08.92 - 06.98	66	EJ16
1.8	11.95 - 06.96	76	EJ18E
1.8 i 4WD	08.92 - 12.00	76	EJ18
2.0	09.96 - 06.97	85	EJ20E
2.0 4WD	12.95 - 06.97	85	EJ20
Legacy II (BD, BG) 2.0 i	09.94 - 06.97	85	EJ20E
2.0 i 4WD	09.94 - 06.97	85	EJ20
2.2 i 4WD	09.94 - 06.97	94	EJ22 EMPI
2.2 i 4WD	06.96 - 06.97	96	EJ22 EMPI
Legacy II St. Wagon 2.0 i	09.94 - 06.97	85	EJ20 EMPI
2.0 i 4WD	09.94 - 06.97	85	EJ20
2.2 i 4WD	02.94 - 06.97	94	EJ22 EMPI
2.2 i 4WD	06.96 - 06.97	96	EJ22 EMPI

T976B K068 40 50 60 70 K012 100

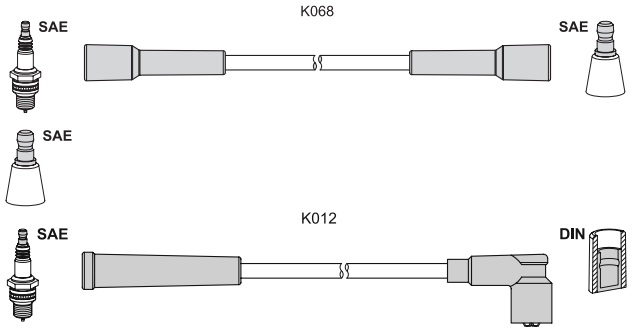

Fiat Panda 1100 (141A_) 1.1	05.91 - 12.99	37	156 C.046
1.1 Trekking 4x4	10.91 - 07.04	37	156 C.046

T977B K501-30 K183 50 45 35 -

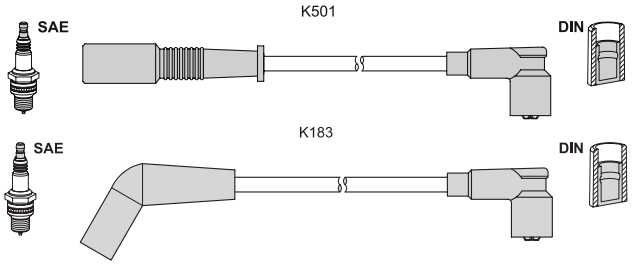

Fiat Panda 1000 (141A_) 1.0 4x4	05.86 - 12.94	33	141 C2._/156 A2._
1.0 i.e. cat	10.87 - 08.98	33	141 C2._/156 A2._
Panda Van (141_) 1.0 i.e	08.92 - 02.04	33	156 A2.246

T978P K618 82 94 108 + + + -

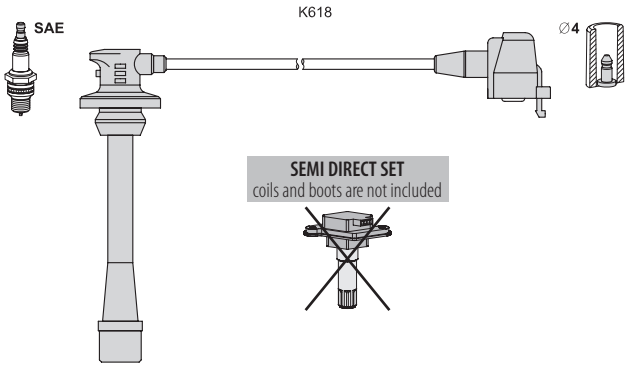

Lexus ES 300 (MCV_) 3.0	10.96 - 07.01	140	1MZ-FE
3.0	10.96 - 07.01	149	1MZ-FE
Toyota Avalon (MCX10_) 3.0	03.95 - 05.05	140	1MZ-FE
Camry (_V2_) 3.0	08.96 - 11.01	135	1MZ-FE
3.0	08.96 - 11.01	140	1MZ-FE
3.0 Combi	08.96 - 07.01	140	1MZ-FE
3.0	08.96 - 11.01	142	1MZ-FE
Sienna (MCL10_) 3.0	08.97 - 12.02	143	1MZ-FE
3.0	08.97 - 12.02	154	1MZ-FE
Solara (_V2_) 3.0 Coupe	06.98 - 06.01	140	1MZ-FE
3.0 Coupe	06.98 - 06.01	147	1MZ-FE
3.0 Cabrio	02.00 - 11.02	140	1MZ-FE
3.0 Cabrio	02.00 - 11.02	147	1MZ-FE

T979B K600 25 25 50 55 80 85 90 95 K318 30 30 original T589C

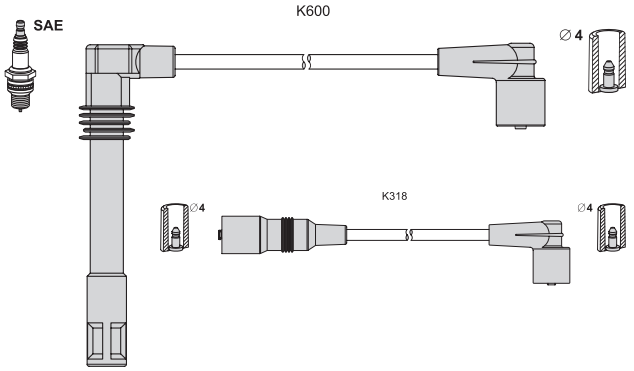

application → T589C (original)

T980B K186 50 50 35 30 -

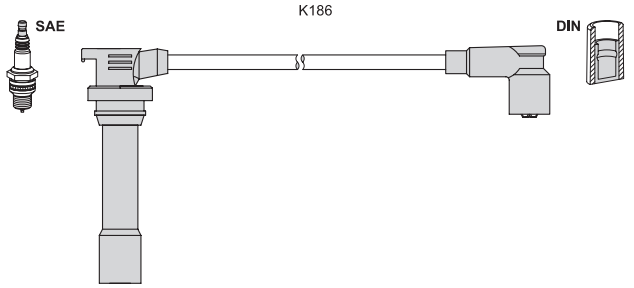

Mazda 323 C V (BA) 1.5 16V	08.94 - 09.98	65	Z5-DE
323 F V (BA) 1.5 16V	07.94 - 09.98	65	Z5-DE
323 P V (BA) 1.5 16V	10.96 -	65	Z5-DE
323 S V (BA) 1.5 16V	08.94 - 09.98	65	Z5-DE

T981B K175 60 60 60 60 -

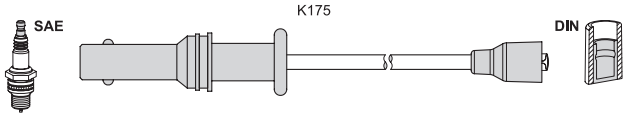

Subaru Impreza Coupe 1.6	07.97 - 12.00	66	EJ16E
1.6 4WD	07.97 - 12.00	66	EJ161
2.0	07.97 - 07.98	85	EJ20E
Impreza Sedan (GC) 1.8	11.95 - 06.96	76	EJ18E
1.8 i 4WD	08.92 - 12.00	76	EJ18/EJ18E
Impreza Stat. Wagon 1.8	11.95 - 06.96	76	EJ18E
1.8 i 4WD	08.92 - 12.00	76	EJ18
2.0	07.97 - 08.98	85	EJ20E
Legacy II (BD, BG) 2.0 i	07.97 - 03.99	85	EJ20E
2.0 i 4WD	07.97 - 03.99	85	EJ20
2.2 i 4WD	07.97 - 03.99	94	EJ22 EMPI
2.2 i 4WD	07.97 - 03.99	96	EJ22 EMPI
Legacy II St. Wagon 2.0 i	07.97 - 11.98	85	EJ20 EMPI
2.0 i 4WD	07.97 - 11.98	85	EJ20
2.2 i 4WD	07.97 - 12.98	94	EJ22 EMPI
2.2 i 4WD	07.97 - 11.98	96	EJ22 EMPI

T982C K137 33 33 + + - alternative T010B

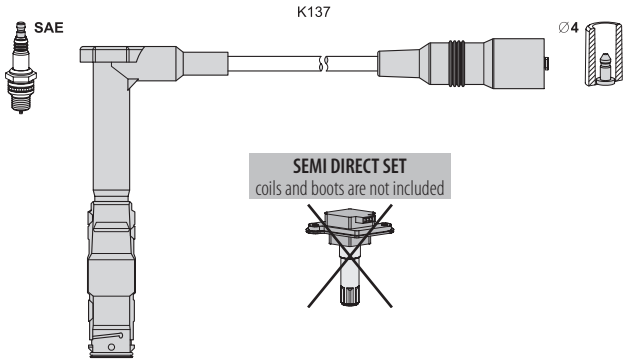

Mercedes C 180 (W202) 1.8	11.94 - 05.00	89	M 111.921
1.8	09.95 - 05.00	90	M 111.921
C 200 (W202) 2.0	09.95 - 05.00	100	M 111.945
C 200 Kompr. (W202) 2.0	10.95 - 05.00	132	M 111.944
2.0	11.96 - 05.00	141	M 111.944
C 230 (W202) 2.3	06.96 - 06.97	110	M 111.974
C 230 Kompr. (W202) 2.3	10.95 - 05.00	142	M 111.975
C 180 T (S202) 1.8	06.96 - 09.00	90	M 111.921
C 200 T (S202) 2.0	06.96 - 03.01	100	M 111.945
C 200 T Kompr. (S202) 2.0	11.96 - 03.01	141	M 111.944
C 230 T (S202) 2.3	06.96 - 06.98	110	M 111.974
C 230 T Kompr. (S202) 2.3	06.97 - 09.00	142	M 111.975
CLK 200 (C208) 2.0	06.97 - 06.02	100	M 111.941
CLK 200 Kompr. (C208) 2.0	06.97 - 06.00	141	M 111.944
CLK 230 Kompr. (C208) 2.3	06.97 - 06.00	142	M 111.975/_.973
CLK 200 Cabrio (A208) 2.0	03.98 - 03.02	100	M 111.941
CLK 200 Kompr. (A208) 2.0	03.98 - 06.00	141	M 111.944
CLK 230 Kompr. (A208) 2.3	03.98 - 06.00	142	M 111.975/_.973
E 200 (W210) 2.0	06.95 - 08.00	100	M 111.942
E 230 (W210) 2.3	06.95 - 06.97	110	M 111.970
E 200 T (S210) 2.0	06.96 - 08.00	100	M 111.942
E 230 T (S210) 2.3	06.96 - 06.97	110	M 111.970
SLK 200 (R170) 2.0	09.96 - 03.00	100	M 111.946
SLK 200 Kompr. (R170) 2.0	10.96 - 03.00	141	M 111.943
SLK 230 Kompr. (R170) 2.3	09.96 - 03.00	142	M 111.973
Sprinter 214 Bus 2.3	02.95 - 05.06	105	M 111.979
Sprinter 214 Flatbed 2.3	02.95 - 05.06	105	M 111.979
Sprinter 214 Van 2.3	02.95 - 05.06	105	M 111.979/_.984
Sprinter 314 Bus (903) 2.3	02.95 - 05.06	105	M 111.984

T 982C ▶

< T982C			
Mercedes Sprinter 314 Bus (903) 2.3 4x4	08.02 - 05.06	105	M 111.984
Sprinter 314 Flatbed 2.3	02.95 - 05.06	105	M 111.984
2.3 4x4	08.02 - 05.06	105	M 111.984
Sprinter 314 Van (903) 2.3	02.95 - 05.06	105	M 111.979/_.984
2.3 4x4	08.02 - 05.06	105	M 111.984
Sprinter 414 Bus (904) 2.3	02.96 - 05.06	105	M 111.979
Sprinter 414 Flatbed 2.3	02.96 - 05.06	105	M 111.979
2.3 4x4	05.97 - 05.06	105	M 111.979
Sprinter 414 Van (904) 2.3	02.96 - 05.06	105	M 111.979
2.3 4x4	05.97 - 05.06	105	M 111.979
V 200 (638/2) 2.0	02.97 - 07.03	95	M 111.948/_.950
V 230 (638/2) 2.3	10.96 - 07.03	105	M 111.978
Vito 113 Bus (638) 2.0	02.96 - 07.03	95	M 111.948/_.950
Vito 114 Bus (638) 2.3	12.96 - 07.03	105	M 111.978
Vito 113 Van (638) 2.0	03.97 - 07.03	95	M 111.948/_.950
Vito 114 Van (638) 2.3	03.97 - 07.03	105	M 111.978
VW LT 28-35 II Bus (2DM) 2.3	05.96 - 07.06	105	AGL
LT 28-46 II Flatbed 2.3	05.96 - 07.06	105	AGL
LT 28-46 II Van 2.3	05.96 - 07.06	105	AGL

T983P K191 30 45 50 65 -

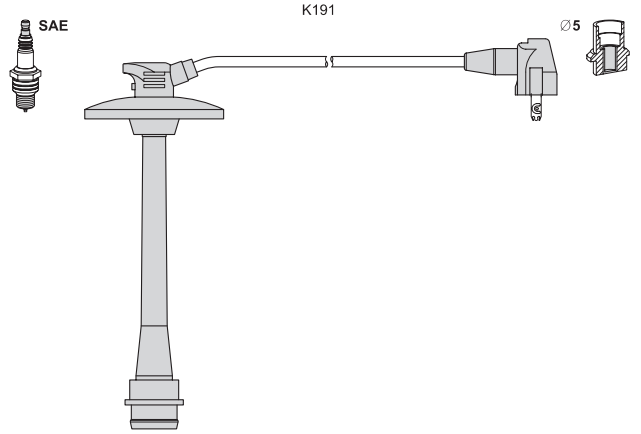

Toyota Camry (_V1_) 2.2	06.91 - 08.96	100	5S-FE
Camry St. Wagon 2.2	03.92 - 07.96	100	5S-FE
Carina E (_T19_) 2.0 GLI	04.92 - 09.97	98	3S-FE
2.0 GTi	04.92 - 02.94	116	3S-GE
2.0 GTi 16V	03.94 - 09.97	129	3S-GE
2.0 i	12.93 - 09.97	93	3S-FE
Carina E Sedan (T19) 2.0	01.93 - 09.97	98	3S-FE
2.0 GTi	04.92 - 02.94	116	3S-GE
2.0 GTi 16V	03.94 - 09.97	129	3S-GE
2.0 i	12.92 - 09.97	93	3S-FE
Carina E Sportswag. 2.0 GLI	01.93 - 09.97	98	3S-FE
2.0 i	05.95 - 09.97	93	3S-FE
Celica (_T20_) 2.2 GT	11.93 - 08.99	100	5S-FE
Celica Coupe (_T18_) 2.2	10.89 - 10.93	100	5S-FE
RAV 4 I (SXA1_) 2.0 4WD	06.94 - 08.96	95	3S-FE
RAV 4 I Cabrio 2.0 16V 4WD	12.97 - 06.00	94	3S-FE

T984P K191 30 45 50 65 K158 40

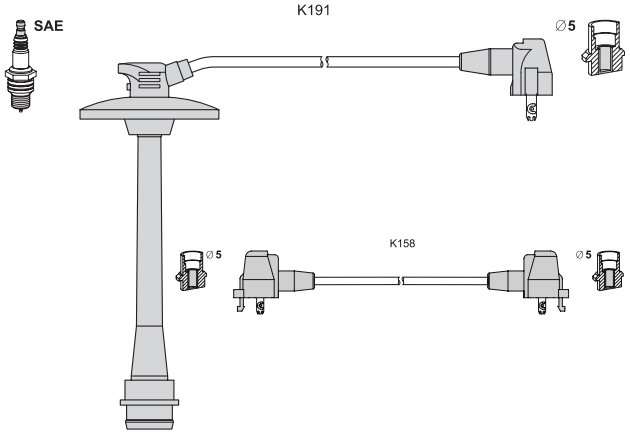

Toyota Celica Coupe (T18) 2.2	10.89 - 10.93	100	5S-FE
RAV 4 I (SXA1_) 2.0 4WD	06.94 - 09.97	95	3S-FE
RAV 4 I Cabrio 2.0 16V 4WD	12.97 - 06.00	94	3S-FE

T985B K192 65 55 45 30 -

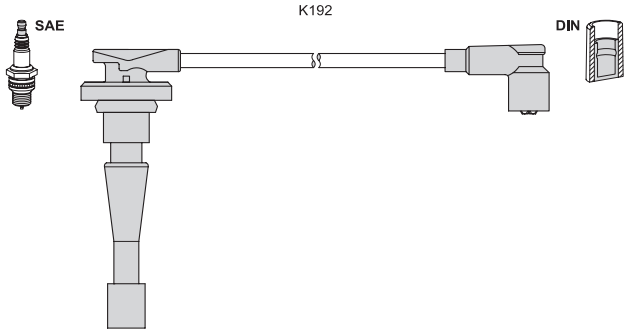

Honda CR-V I (RD) 2.0 16V	10.95 - 01.99	94	B20B
2.0 16V	01.99 - 02.02	108	B20Z1
CR-V II (RD_) 2.0	07.02 - 09.06	110	K20A4
CRX II 1.6 i 16V Vtec	10.89 - 02.92	110	B16A1

T986B K193 50 35 25 20 - original T777C

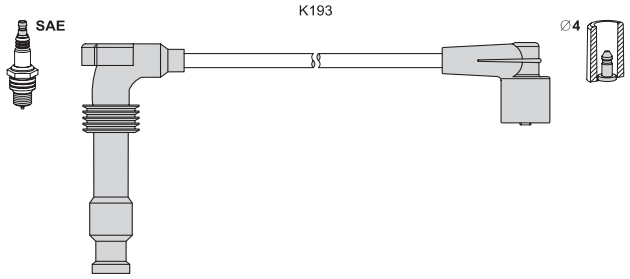

application → T777C (original)

T987B K193 65 60 55 40 - original T778C

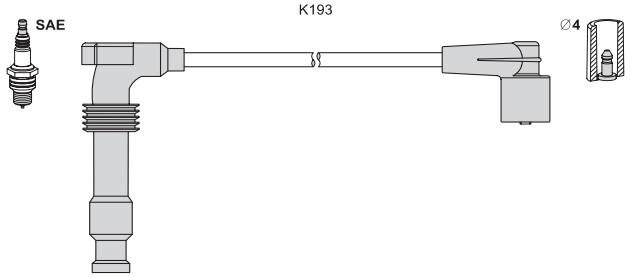

application → T778C (original)

T988B K193 80 65 55 45 - original T780C

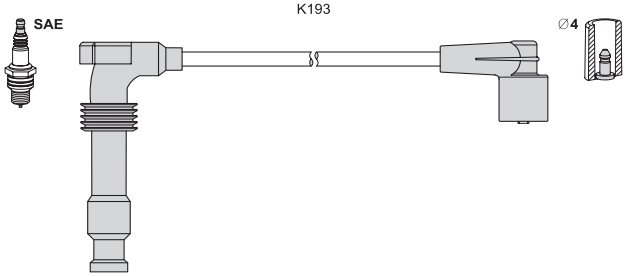

application → T780C (original)

T989B K193 65 50 65 50 55 35 - original T779C

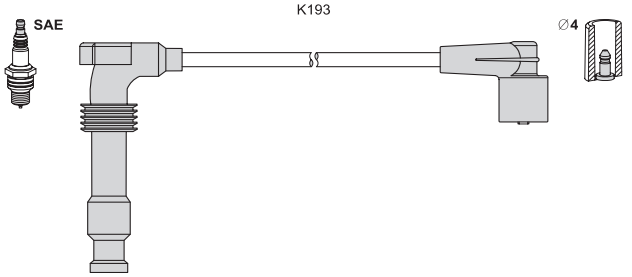

application → T779C (original)

T991B K193 60 60 45 35 - original T928C

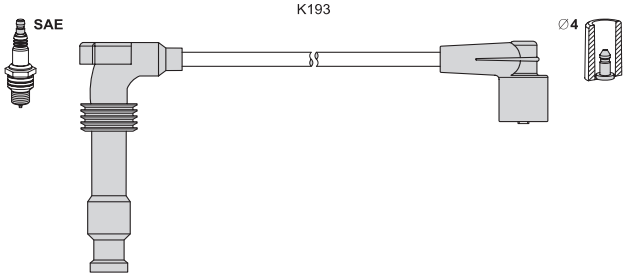

application → T928C (original)

T992B K193 75 60 65 45 60 30 - original T950C

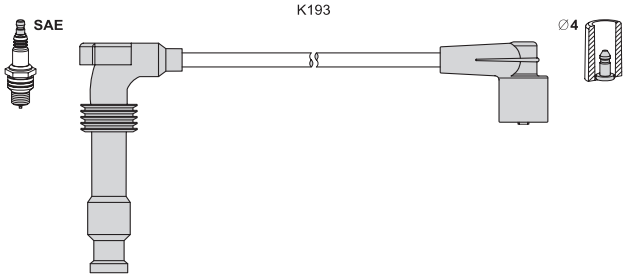

application → T950C (original)

T993B K193 80 60 70 45 55 40 - original T951C

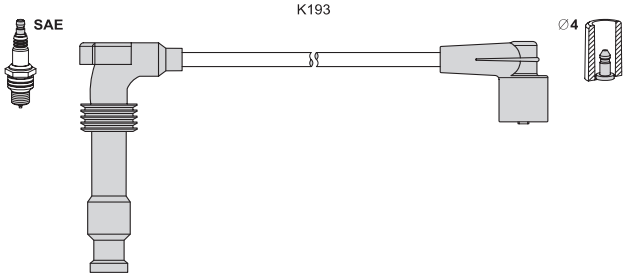

application → T951C (original)

T994B K594 10 27 + + -

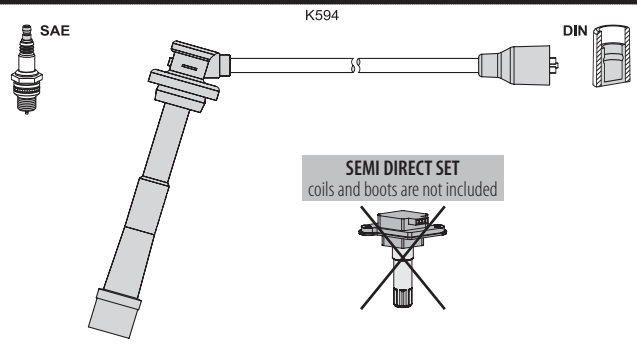

Fiat Sedici 1.6 16V	06.06 -		88	M16A
1.6 16V	06.06 -		79	M16A
1.6 16V 4x4	06.06 -		88	M16A
1.6 16V 4x4	06.06 -		79	M16A
Subaru Justy III (G3X) 1.5	09.03 -		73	M15A
Suzuki Grand Vitara II 1.6 Allrad	04.05 -		78	M16A
Ignis (FH) 1.3	10.00 -	09.03	61	M13A
1.3 4WD	10.00 -	09.03	61	M13A
Ignis II 1.3	09.03 -		69	M13A
1.3 4x4	09.03 -		69	M13A
1.5	09.03 -		73	M15A
1.5 4x4	09.03 -		73	M15A
1.5 Sport	12.03 -		80	M15A
Jimny (FJ) 1.3 16V	02.01 -		60	M13A
1.3 16V 4WD	02.01 -		60	M13A
1.3 16V 4x4	08.05 -		63	M13A
1.3 4WD	05.14 -		62	M13A
Liana (ER) 1.3	03.02 -		66	M13A
1.6	03.02 -		76	M16A
1.6	01.05 -		79	M16A
1.6 4WD	03.02 -		76	M16A
1.6 4WD	04.02 -		78	M16A
1.6 4WD	01.05 -		79	M16A
1.6 i	04.02 -		78	M16A
Liana Combi (ER) 1.3	07.01 -	12.07	66	M13A
1.6	07.01 -	12.07	76	M16A
1.6 4WD	07.01 -	12.07	76	M16A
1.6 4WD	04.02 -	12.07	78	M16A
1.6 4WD	01.05 -	12.07	79	M16A
1.6 i	04.02 -	12.07	78	M16A
Swift III (MZ,EZ) 1.3	02.05 -		68	M13A
1.3 4x4	01.06 -		66	M13A
1.3 4x4	02.05 -		68	M13A
1.5	02.05 -		75	M15A
1.5 4x4	02.05 -		74	M15A
1.6	05.06 -		92	M16A
SX4 (GY) 1.5	06.06 -		73	M15A
1.5 VVT	07.10 -		82	M15A
1.6 VVT	06.06 -		79	M16A
1.6 VVT	07.09 -		88	M16A
1.6 VVT 4x4	07.09 -		82	M16A
1.6 VVT 4x4	06.06 -		79	M16A
1.6 VVT 4x4	07.09 -		88	M16A
SX4 Sedan 1.6	10.07 -		79	M16A
1.6 AWD	10.07 -		88	M16A
Wagon R+ (MM) 1.3	09.03 -		69	M13A
1.3 4WD	09.03 -		69	M13A

T 995G ▶

T995G K520 75 85 90 95 -

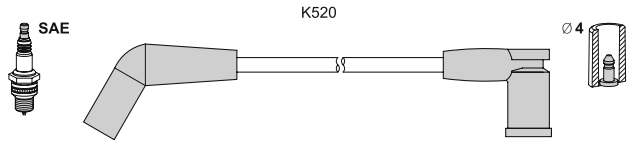

Ford Escort VII 1.3	09.98 - 10.98	44	J4B
Escort VII Combi 1.3	09.98 - 10.98	44	J4B
Escort VII Sedan 1.3	09.98 - 02.99	44	J4B
Fiesta IV (JA_, JB_) 1.0 i	09.98 - 09.99	38	ZH10JRB
1.3 i	09.98 - 01.02	37	JJA/_E/_M/_C/_J/_K
1.3 i	09.98 - 01.02	44	J4R/_C/_L/J/_Q/_T
Fiesta Van 1.3	09.98 -	44	J4C
Ka (RB_) 1.3 i	07.97 - 09.99	38	ZH10JRB
1.0 i	09.99 - 11.08	48	
1.3 i	09.98 - 11.08	36	JJH/JJD/JJF/JJG/JJL
1.3 i	09.98 - 10.02	37	JJB
1.3 i	09.98 - 11.08	44	J4S/_K/_M/_P/_N
Mazda 121 III 1.3	03.96 - 04.03	37	JJM/JJK
1.3	03.96 - 04.03	44	J4R/J4T

T996B K169 45 40 30 20 -

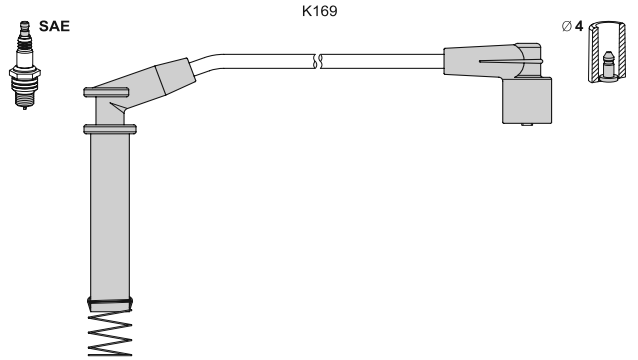

Opel/Vauxhall Astra F 1.4	11.94 - 09.98	60	14 SE
1.4 Si	11.94 - 09.98	60	C 14 SE
1.6 i	05.93 - 07.96	52	X 16 SZ
1.6 i	03.92 - 09.98	55	X 16 SZR
1.6 Si	05.92 - 12.94	74	C 16 SE
Astra F Cabriolet 1.4 Si	11.94 - 03.01	60	C 14 SE
1.6 i	03.93 - 08.96	52	X 16 SZ
1.6 i	01.96 - 03.01	55	X 16 SZR
Astra F Caravan 1.4	11.94 - 09.98	60	14 SE
1.4 Si	11.94 - 01.98	60	C 14 SE
1.6 i	05.93 - 07.96	52	X 16 SZ
1.6 i	09.91 - 01.98	55	X 16 SZR
1.6 Si	03.92 - 12.94	74	C 16 SE
Astra F CC 1.4	11.94 - 01.98	60	14 SE
1.4 Si	11.94 - 01.98	60	C 14 SE
1.6 i	05.93 - 07.96	52	X 16 SZ
1.6 i	09.91 - 01.98	55	X 16 SZR
1.6 Si	03.92 - 12.94	74	C 16 SE
Astra F Van 1.6 i	02.93 - 07.96	52	X 16 SZ
Corsa A CC 1.4 Si	09.91 - 03.93	60	C 14 SE
Corsa B 1.2 i	03.93 - 09.00	33	X 12 SZ
1.4 Si	03.93 - 09.00	60	C 14 SE
Vectra A (86_, 87_) 1.6 i	09.93 - 11.95	52	X 16 SZ
Vectra A CC 1.6 i	09.93 - 11.95	52	X 16 SZ

T997B K197 40 28 20 13 -

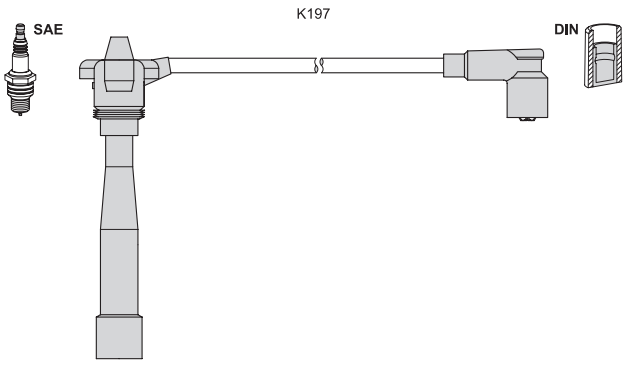

Fiat Punto 85 (176) 1.2 16V	04.97 - 09.99	63	176 B9.000
Punto 85 Cabriolet 1.2 16V	04.97 - 06.00	63	176 B9.000
Lancia Y (840A) 1.2 16V	04.97 - 09.03	63	176 B9.000

T998B K198 60 48 33 28 -

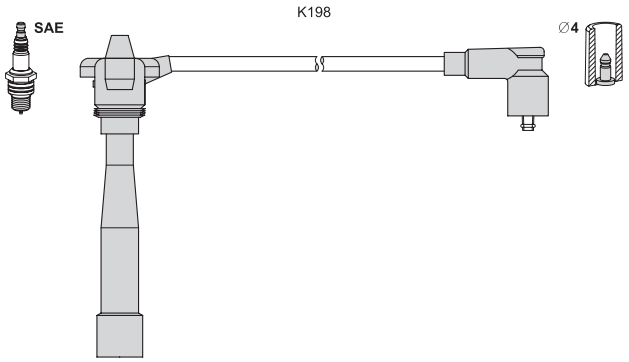

Fiat Brava (182) 1.2 16V	12.98 - 10.00	60	182 B2.000
1.2 16V	10.00 - 10.01	59	188 A5.000
Bravo (182) 1.2 16V	12.98 - 10.00	60	182 B2.000
1.2 16V	10.00 - 10.01	59	188 A5.000
Marea (185) 1.2 16V	10.98 - 05.02	60	182 B2.000
Marea Weekend 1.2 16V	10.98 - 05.02	60	182 B2.000
Punto 80 (188) 1.2 16V	09.99 -	59	188 A5.000
Lancia Y (840A) 1.2 16V	10.00 - 09.03	59	188 A5.000

T999B K196 30 40 55 60 K079 20

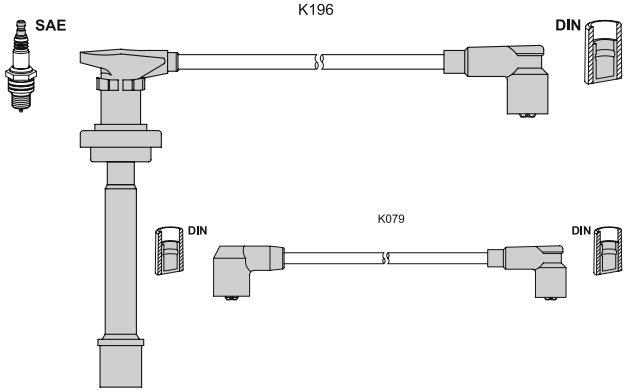

Infiniti G20 2.0	01.90 - 12.97	85	SR20DE
Nissan 100 NX (B13) 2.0	10.90 - 10.94	110	SR20DE
2.0 GTI	03.91 - 10.94	105	SR20DE
200 SX 2.0 i 16V Turbo	10.93 - 12.99	147	SR20DET
Primera (P10) 2.0	06.90 - 04.93	105	SR20DE
2.0 16V	06.90 - 01.96	85	SR20DI
2.0 16V 4x4	04.91 - 06.96	85	SR20DI
2.0 GT	06.90 - 01.96	110	SR20DE

< T999B				
Nissan Primera (P10) 2.0 GT 4x4	03.91 - 04.93	105	SR20DE
2.0 i	01.95 - 06.96	92	SR20DE
Primera Hatch. (P10) 2.0	06.90 - 01.96	110	SR20DE
2.0	06.90 - 04.93	105	SR20DE
2.0 16V	06.90 - 01.96	85	SR20DI
2.0 16V 4x4	04.91 - 06.96	85	SR20DI
2.0 GT 4x4	03.91 - 04.93	105	SR20DE
2.0 i	01.95 - 06.96	92	SR20DE
Primera Travel. (W10) 2.0	07.94 - 01.98	110	SR20DE
2.0 i	07.90 - 03.98	85	SR20DI
Sunny III Hatchb. 2.0 GTI 16V	10.90 - 05.95	105	SR20DE
2.0 GTI-R 4x4	10.90 - 05.95	162	SR20DET
Sunny III Liftback 2.0 i 16V	10.90 - 05.95	105	SR20DE

Summary HP / kW
Переводная таблица л.с. / кВт
Přehled HP / kW

HP	kW
1	0,736
30	22,065
35	25,742
40	29,42
45	33,097
50	36,775
55	40,452
60	44,13
65	47,807
70	51,485
75	55,162
80	58,84
85	62,517
90	66,195
95	69,872
100	73,55
105	77,227
110	80,905
115	84,582
120	88,26
125	91,937
130	95,615
135	99,292
140	102,97
145	106,647
150	110,325
155	114,002
160	117,68
165	121,357
170	125,035
175	128,712
180	132,39
185	136,067
190	139,745
195	143,422
200	147,1
205	150,777
210	154,455
215	158,132
220	161,81
225	165,487
230	169,165
235	172,842
240	176,52
245	180,197
250	183,875
255	187,552
260	191,23
265	194,907
270	198,585
275	202,263

kW	HP
1	1,36
20	27,192
25	33,991
30	40,789
35	47,587
40	54,385
45	61,183
50	67,981
55	74,779
60	81,577
65	88,375
70	95,173
75	101,972
80	108,77
85	115,568
90	122,366
95	129,162
100	135,962
105	142,76
110	149,558
115	156,356
120	163,154
125	169,953
130	176,751
135	183,549
140	190,347
145	197,145
150	203,943
155	210,741
160	217,539
165	224,337
170	231,135
175	237,934
180	244,732
185	251,53
190	258,328
195	265,126
200	271,924
205	278,722
210	285,52
215	292,318
220	299,116
225	305,915
230	312,713
235	319,511
240	326,309
245	333,107
250	339,905
255	346,703
260	353,501
265	360,299

Alfa Romeo	TESLA
404977	T204B
7733566	T205B
46400418	T014B
46400418	T876C
46439900	T210C
46469919	T100C
46469919	T599C
46469920	T100C
46469920	T599C
60504232	T878B
60504325	T878B
60504823	T878B
60522981	T425B
60538002	T206C
60538003	T206C
60564150	T595C
60564151	T599C
60566481	T026B
60566481	T824C
60566483	T026B
60566483	T824C
60568852	T206C
60573733	T958C
60584128	T878B
60584129	T878B
60584943	T210C
60590964	T021B
60590964	T389C
60597943	T025B
60597943	T812C
60598355	T025B
60598355	T812C
60600766	T021B
60600766	T389C
60609839	T211C
60808240	T353C
115480508900	T425B

Audi	TESLA
437998031B	T675C
59998031	T038B
59998031	T701C
80399831	T593C
803998031	T038B
803998031	T701C
803998031	T703C
N-10204402	T068B
N-10204402	T952C
N-10243611	T068B
N-10243611	T952C

Beru	TESLA
ZE566	T349C
ZE738	T717C
ZE755	T173C
ZE757	T174C
ZE760	T720C
ZE765	T869C
ZE829	T209P
ZEF298	T801C
ZEF298	T918C
ZEF404	T208B
ZEF432	T732B
ZEF437	T742C
ZEF463	T932C
ZEF466	T740C
ZEF471	T931C
ZEF518	T381B
ZEF520	T649C
ZEF558	T741C
ZEF561	T650C
ZEF561	T701C
ZEF561	T821C
ZEF562	T633C
ZEF562	T642C
ZEF562	T654C
ZEF566	T971C
ZEF568	T881C
ZEF569	T292C
ZEF570	T762B
ZEF573	T763B
ZEF574	T168B
ZEF575	T268B
ZEF575	T437B
ZEF575	T764B
ZEF576	T166B
ZEF577	T179B
ZEF579	T275B
ZEF579	T283B
ZEF580	T271B
ZEF581	T287B
ZEF584	T163B
ZEF585	T391C
ZEF597	T806C
ZEF607	T176C
ZEF608	T176C
ZEF609	T176C
ZEF610	T176C
ZEF611	T176C
ZEF612	T700C
ZEF627	T769B
ZEF634	T390C
ZEF634	T465B
ZEF635	T807C
ZEF641	T624C
ZEF642	T626C
ZEF642	T805C
ZEF665	T274B
ZEF672	T777C
ZEF707	T920C
ZEF716	T646C
ZEF716	T654C
ZEF716	T865C
ZEF717	T651C
ZEF719	T227G
ZEF720	T242B
ZEF722	T645B
ZEF724	T162B

Beru	TESLA
ZEF724	T277B
ZEF725	T282B
ZEF725	T629B
ZEF728	T909B
ZEF729	T669B
ZEF730	T311B
ZEF731	T670B
ZEF732	T858B
ZEF733	T705B
ZEF735	T321B
ZEF736	T792B
ZEF737	T217B
ZEF738	T705B
ZEF743	T435B
ZEF745	T435B
ZEF749	T908B
ZEF752	T291B
ZEF752	T906B
ZEF755	T724B
ZEF756	T728B
ZEF757	T668B
ZEF758	T668B
ZEF759	T303B
ZEF760	T306B
ZEF761	T671B
ZEF762	T290B
ZEF763	T721B
ZEF765	T625S
ZEF766	T499B
ZEF767	T134H
ZEF767	T355S
ZEF767	T412M
ZEF768	T456B
ZEF768	T912B
ZEF769	T135H
ZEF769	T356S
ZEF769	T413M
ZEF769	T456B
ZEF771	T241B
ZEF771	T455B
ZEF772	T229B
ZEF773	T231B
ZEF773	T261B
ZEF775	T835B
ZEF776	T795B
ZEF778	T615B
ZEF779	T829B
ZEF781	T501G
ZEF783	T410G
ZEF784	T744G
ZEF785	T977B
ZEF786	T830B
ZEF787	T722B
ZEF788	T494B
ZEF789	T905B
ZEF790	T496B
ZEF792	T959B
ZEF793	T497B

Beru	TESLA
ZEF796	T244B
ZEF797	T606B
ZEF797	T647B
ZEF798	T707B
ZEF799	T320B
ZEF799	T840B
ZEF800	T577B
ZEF800	T786B
ZEF800	T787B
ZEF801	T878B
ZEF802	T427B
ZEF803	T204B
ZEF803	T425B
ZEF804	T597B
ZEF809	T228G
ZEF810	T474G
ZEF811	T462G
ZEF811	T463G
ZEF811	T756G
ZEF812	T195H
ZEF812	T372S
ZEF813	T815B
ZEF814	T705B
ZEF825	T443B
ZEF826	T443B
ZEF827	T444B
ZEF830	T933B
ZEF834	T440B
ZEF834	T736B
ZEF835	T698B
ZEF835	T737B
ZEF836	T846B
ZEF836	T895B
ZEF837	T229B
ZEF838	T232B
ZEF839	T570B
ZEF840	T230B
ZEF840	T847B
ZEF841	T570B
ZEF843	T572B
ZEF845	T547B
ZEF848	T798B
ZEF849	T838B
ZEF850	T868B
ZEF851	T902B
ZEF852	T479B
ZEF853	T120B
ZEF856	T482B
ZEF856	T796B
ZEF859	T760B
ZEF860	T898B
ZEF862	T556B
ZEF863	T482B
ZEF864	T872B
ZEF865	T246B
ZEF866	T507B
ZEF869	T980B
ZEF870	T555B

Beru	TESLA
ZEF871	T302B
ZEF873	T296B
ZEF874	T502B
ZEF874	T503B
ZEF875	T901B
ZEF877	T902B
ZEF878	T505B
ZEF878	T903B
ZEF879	T902B
ZEF880	T504B
ZEF881	T974B
ZEF883	T254B
ZEF884	T532B
ZEF885	T119B
ZEF886	T537P
ZEF888	T531B
ZEF889	T848B
ZEF890	T849B
ZEF891	T506B
ZEF893	T265B
ZEF894	T260B
ZEF895	T385B
ZEF896	T999B
ZEF898	T492B
ZEF899	T530B
ZEF899	T946B
ZEF900	T264B
ZEF901	T300B
ZEF901	T844B
ZEF903	T850B
ZEF904	T913B
ZEF905	T975B
ZEF906	T975B
ZEF906	T981B
ZEF907	T850B
ZEF909	T328B
ZEF910	T585B
ZEF911	T640P
ZEF912	T423B
ZEF912	T957B
ZEF913	T602B
ZEF914	T602B
ZEF915	T512B
ZEF915	T585B
ZEF916	T735B
ZEF917	T983P
ZEF919	T522P
ZEF920	T521B
ZEF921	T520B
ZEF923	T746P
ZEF924	T983P
ZEF927	T149B
ZEF928	T540B
ZEF930	T540B
ZEF931	T540B
ZEF931	T638B
ZEF933	T966B
ZEF934	T926P

Beru > TESLA ▶

Beru	TESLA
ZEF934	T968P
ZEF941	T396P
ZEF943	T398P
ZEF946	T400P
ZEF947	T927P
ZEF948	T123P
ZEF949	T983P
ZEF951	T616P
ZEF952	T401P
ZEF954	T636B
ZEF956	T615B
ZEF959	T617B
ZEF965	T611B
ZEF967	T552C
ZEF968	T757C
ZEF969	T876C
ZEF971	T824C
ZEF972	T812C
ZEF973	T824C
ZEF978	T336B
ZEF979	T338B
ZEF981	T338B
ZEF982	T239B
ZEF983	T845B
ZEF984	T206C
ZEF985	T958C
ZEF987	T623C
ZEF988	T982C
ZEF989	T674C
ZEF990	T874C
ZEF991	T818C
ZEF992	T162B
ZEF993	T929B
ZEF994	T629B
ZEF994	T996B
ZEF995	T765B
ZEF996	T287B
ZEF997	T870B
ZEF1000	T182P
ZEF1001	T899B
ZEF1002	T871B
ZEF1003	T572B
ZEF1004	T572B
ZEF1005	T895B
ZEF1012	T645B
ZEF1014	T784B
ZEF1015	T785B
ZEF1016	T543B
ZEF1017	T177C
ZEF1017	T552C
ZEF1019	T723B
ZEF1020	T551B
ZEF1021	T239B
ZEF1022	T239B
ZEF1024	T542B
ZEF1025	T544B
ZEF1026	T543B
ZEF1027	T240B
ZEF1028	T542B
ZEF1029	T542B

Beru	TESLA
ZEF1029	T723B
ZEF1030	T543B
ZEF1033	T877C
ZEF1036	T353B
ZEF1041	T244B
ZEF1042	T244B
ZEF1043	T244B
ZEF1043	T791B
ZEF1044	T498B
ZEF1044	T600B
ZEF1048	T133B
ZEF1049	T724B
ZEF1050	T724B
ZEF1052	T129B
ZEF1053	T220B
ZEF1054	T220B
ZEF1055	T222B
ZEF1056	T132B
ZEF1057	T458B
ZEF1058	T455B
ZEF1060	T129B
ZEF1061	T723B
ZEF1062	T220B
ZEF1064	T542B
ZEF1065	T546B
ZEF1066	T722B
ZEF1067	T724B
ZEF1068	T446B
ZEF1070	T220B
ZEF1072	T976B
ZEF1073	T241B
ZEF1074	T829B
ZEF1076	T527B
ZEF1078	T542B
ZEF1081	T985B
ZEF1082	T533P
ZEF1085	T402P
ZEF1087	T253B
ZEF1091	T768B
ZEF1091	T769B
ZEF1092	T882B
ZEF1093	T883B
ZEF1094	T841B
ZEF1095	T797B
ZEF1097	T847B
ZEF1098	T648B
ZEF1099	T847B
ZEF1100	T847B
ZEF1101	T799B
ZEF1102	T245B
ZEF1104	T901B
ZEF1105	T441B
ZEF1107	T502B
ZEF1108	T975B
ZEF1109	T851B
ZEF1109	T852B
ZEF1110	T518B
ZEF1111	T927P
ZEF1113	T708B
ZEF1114	T500G

Beru	TESLA
ZEF1114	T894G
ZEF1115	T726G
ZEF1117	T855C
ZEF1118	T962B
ZEF1119	T286B
ZEF1121	T322B
ZEF1122	T284B
ZEF1123	T287B
ZEF1124	T862B
ZEF1125	T205B
ZEF1128	T949B
ZEF1129	T711B
ZEF1130	T524B
ZEF1131	T223G
ZEF1133	T285B
ZEF1134	T294B
ZEF1135	T747B
ZEF1135	T747B
ZEF1136	T523B
ZEF1137	T710B
ZEF1140	T389C
ZEF1140	T508B
ZEF1142	T699B
ZEF1142	T738B
ZEF1143	T509B
ZEF1144	T799B
ZEF1144	T837B
ZEF1147	T967B
ZEF1148	T103C
ZEF1148	T601C
ZEF1148	T714C
ZEF1148	T922C
ZEF1149	T649C
ZEF1150	T820C
ZEF1152	T950C
ZEF1153	T777C
ZEF1155	T780C
ZEF1158	T880C
ZEF1159	T289C
ZEF1159	T928C
ZEF1160	T778C
ZEF1160	T928C
ZEF1161	T629B
ZEF1162	T770B
ZEF1163	T900B
ZEF1164	T817B
ZEF1165	T160B
ZEF1166	T980B
ZEF1168	T105B
ZEF1168	T936B
ZEF1169	T934B
ZEF1169	T938B
ZEF1170	T554B
ZEF1171	T591C
ZEF1172	T592C
ZEF1173	T773G
ZEF1174	T590C
ZEF1175	T818C
ZEF1177	T589C
ZEF1178	T164G

Beru	TESLA
ZEF1180	T800C
ZEF1180	T802C
ZEF1180	T843C
ZEF1181	T997B
ZEF1182	T782C
ZEF1183	T781C
ZEF1184	T578C
ZEF1185	T960B
ZEF1186	T767B
ZEF1187	T842C
ZEF1188	T114C
ZEF1189	T819C
ZEF1191	T378B
ZEF1191	T380B
ZEF1192	T378B
ZEF1193	T915B
ZEF1194	T702C
ZEF1195	T941C
ZEF1196	T101C
ZEF1197	T803C
ZEF1198	T656C
ZEF1199	T104C
ZEF1200	T373B
ZEF1200	T374B
ZEF1201	T998B
ZEF1203	T565B
ZEF1206	T724B
ZEF1210	T575B
ZEF1214	T124G
ZEF1215	T188G
ZEF1218	T675C
ZEF1219	T887C
ZEF1220	T920C
ZEF1222	T942C
ZEF1223	T702C
ZEF1223	T952C
ZEF1224	T854C
ZEF1226	T143G
ZEF1227	T107B
ZEF1227	T110B
ZEF1228	T247P
ZEF1229	T102C
ZEF1229	T153C
ZEF1230	T659C
ZEF1231	T916B
ZEF1232	T917B
ZEF1233	T165C
ZEF1235	T779C
ZEF1235	T951C
ZEF1236	T175C
ZEF1239	T324B
ZEF1245	T583B
ZEF1251	T709B
ZEF1252	T181B
ZEF1253	T471G
ZEF1254	T879B
ZEF1255	T578C
ZEF1255	T857C
ZEF1256	T598B
ZEF1260	T823C

Beru	TESLA
ZEF1261	T608B
ZEF1262	T607B
ZEF1264	T466G
ZEF1272	T117B
ZEF1300	T613P
ZEF1301	T281B
ZEF1304	T149B
ZEF1305	T588P
ZEF1306	T588P
ZEF1308	T637B
ZEF1324	T847B
ZEF1327	T112B
ZEF1328	T535B
ZEF1338	T810C
ZEF1338	T811C
ZEF1340	T111B
ZEF1348	T599C
ZEF1360	T555B
ZEF1365	T595C
ZEF1367	T594C
ZEF1368	T301B
ZEF1370	T924B
ZEF1371	T538B
ZEF1372	T250B
ZEF1373	T822B
ZEF1375	T872B
ZEF1376	T487B
ZEF1377	T848B
ZEF1378	T386B
ZEF1380	T622C
ZEF1382	T279B
ZEF1384	T280B
ZEF1385	T323B
ZEF1387	T535B
ZEF1388	T706B
ZEF1391	T304B
ZEF1392	T496B
ZEF1395	T304B
ZEF1397	T564B
ZEF1399	T719C
ZEF1401	T716C
ZEF1402	T173C
ZEF1409	T139B
ZEF1412	T743C
ZEF1442	T808C
ZEF1475	T995G
ZEF1477	T178B
ZEF1479	T170C
ZEF1480	T116B
ZEF1485	T117B
ZEF1488	T809C
ZEF1496	T856C
ZEF1497	T180B
ZEF1503	T568B
ZEF1504	T665B
ZEF1505	T569B
ZEF1528	T582B
ZEF1530	T747B
ZEF1530	T747B
ZEF1530	T965B

Beru	TESLA
ZEF1540	T297B
ZEF1545	T477B
ZEF1546	T930B
ZEF1549	T972G
ZEF1556	T739C
ZEF1561	T310B
ZEF1572	T387C
ZEF1580	T747B
ZEF1596	T468G
ZEF1598	T631B
ZEF1604	T495B
ZEF1612	T383B
ZEF1625	T382B
ZEF1629	T406C
BMW	**TESLA**
1247361	T032B
1247361	T781C
1715256	T075B
1715256	T810C
1715256	T811C
124752101	T782C
171525602	T075B
171525602	T810C
171525602	T811C
12121270550	T030B
12121270550	T716C
12121311735	T719C
12121311803	T719C
12121312680	T720C
12121705697	T437B
12121705715	T030B
12121705715	T716C
12121705716	T030B
12121705716	T716C
12121705718	T029B
12121705718	T940C
12121710591	T023B
12121710591	T717C
12121714154	T031B
12121714154	T174C
12121716939	T027B
12121716939	T173C
12121717206	T027B
12121717206	T173C
12121717646	T028B
12121717646	T176C
12121720529	T031B
12121720529	T174C
12121727100	T114C
12121727686	T028B
12121727686	T176C
12121735216	T033B
12121735216	T175C
Bosch	**TESLA**
B011	T769B
B051	T223G
B052	T112B
B055	T950C
B068	T195H
B077	T204B

Bosch	TESLA
B084	T458B
B086	T284B
B090	T143G
B093	T250B
B105	T275B
B105	T283B
B117	T908B
B118	T202B
B120	T817B
B124	T629B
B124	T766B
B125	T929B
B126	T282B
B126	T862B
B127	T962B
B129	T146G
B129	T476G
B131	T791B
B133	T133B
B135	T290B
B137	T668B
B138	T303B
B139	T880C
B140	T466G
B141	T500G
B141	T726G
B141	T894G
B141	T963B
B146	T128B
B146	T445B
B146	T455B
B147	T502B
B147	T503B
B148	T286B
B149	T556B
B149	T980B
B150	T985B
B151	T902B
B151	T903B
B152	T562B
B153	T563B
B155	T567B
B156	T277B
B157	T901B
B159	T505B
B161	T105B
B161	T935B
B161	T936B
B161	T938B
B162	T779C
B162	T951C
B167	T281B
B169	T323B
B170	T706B
B171	T616P
B174	T265B
B177	T264B
B178	T120B
B179	T386B
B181	T998B

Bosch	TESLA
B185	T254B
B186	T261B
B187	T159B
B188	T442B
B192	T116B
B193	T600B
B195	T822B
B197	T538B
B198	T518B
B198	T924B
B205	T850B
B206	T618P
B207	T537P
B208	T972G
B209	T366B
B210	T709B
B212	T664B
B213	T569B
B215	T617B
B216	T318B
B216	T577B
B218	T504B
B218	T531B
B220	T381B
B222	T209P
B222	T444B
B223	T331B
B228	T780C
B229	T191B
B230	T670B
B233	T881C
B234	T289C
B234	T928C
B237	T777C
B239	T848B
B241	T760B
B241	T776B
B242	T870B
B245	T501G
B248	T139B
B254	T878B
B262	T180B
B263	T735B
B263	T967B
B265	T300B
B266	T247P
B271	T965G
B272	T251B
B273	T539P
B275	T443B
B276	T292C
B277	T933B
B278	T385B
B279	T507B
B280	T352B
B281	T765B
B301	T918C
B302	T869C
B303	T601C
B303	T714C

Bosch	TESLA
B303	T922C
B304	T952C
B305	T818C
B306	T437B
B307	T782C
B308	T874C
B309	T842C
B310	T810C
B311	T743C
B311	T982C
B312	T578C
B313	T390C
B314	T806C
B315	T807C
B316	T623C
B317	T701C
B319	T589C
B320	T702C
B321	T887C
B324	T173C
B325	T176C
B326	T174C
B329	T624C
B330	T971C
B332	T741C
B333	T740C
B334	T932C
B337	T559C
B338	T650C
B338	T657C
B339	T651C
B340	T675C
B340	T920C
B341	T857C
B342	T649C
B342	T821C
B343	T654C
B343	T656C
B343	T658C
B343	T819C
B346	T854C
B347	T803C
B348	T165C
B349	T153C
B349	T659C
B350	T942C
B351	T805C
B354	T877C
B355	T732B
B356	T865C
B359	T674C
B359	T854C
B359	T855C
B359	T856C
B360	T633C
B360	T642C
B361	T811C
B362	T175C
B369	T646C
B377	T349C

Bosch	TESLA
B380	T703C
B381	T593C
B384	T823C
B385	T920C
B386	T104C
B700	T410G
B702	T260B
B702	T266B
B702	T489B
B702	T491B
B703	T849B
B704	T786B
B706	T707B
B706	T756G
B707	T131B
B709	T543B
B710	T325B
B710	T970B
B712	T132B
B712	T239B
B715	T840B
B716	T913B
B716	T975B
B716	T981B
B718	T550B
B720	T373B
B720	T374B
B720	T934B
B721	T230B
B721	T570B
B721	T847B
B721	T847B
B722	T166B
B722	T882B
B723	T162B
B723	T267B
B723	T287B
B725	T218B
B726	T356S
B727	T498B
B731	T564B
B732	T326B
B734	T246B
B737	T220B
B738	T830B
B739	T698B
B739	T737B
B740	T217B
B740	T909B
B742	T555B
B743	T792B
B744	T196B
B747	T269B
B748	T561B
B750	T369S
B751	T598B
B752	T784B
B754	T722B
B758	T899B
B760	T964B

Bosch > TESLA ▶

Bosch	TESLA
B767	T497B
B768	T359S
B769	T291B
B769	T906B
B772	T560B
B773	T380B
B774	T140G
B774	T225G
B774	T463G
B776	T895B
B776	T895B
B778	T289C
B778	T778C
B783	T125G
B783	T141G
B785	T109B
B789	T898B
B790	T488B
B791	T542B
B792	T829B
B794	T496B
B796	T144B
B797	T364B
B798	T606B
B798	T647B
B799	T999B
B800	T179B
B801	T271B
B801	T274B
B802	T228G
B803	T215B
B804	T199B
B805	T227G
B807	T575B
B807	T666B
B807	T946B
B810	T585B
B810	T644B
B812	T480B
B813	T837B
B814	T280B
B819	T138B
B820	T905B
B821	T506B
B822	T311B
B826	T764B
B829	T789G
B830	T815B
B831	T667B
B833	T471G
B835	T425B
B838	T940C
B839	T481B
B841	T327B
B841	T328B
B841	T423B
B841	T844B
B844	T663B
B846	T645B
B847	T607B

Bosch	TESLA
B847	T608B
B848	T721B
B850	T163B
B851	T435B
B852	T858B
B853	T129B
B855	T602B
B856	T597B
B857	T446B
B858	T224G
B859	T482B
B861	T240B
B861	T723B
B862	T762B
B864	T278B
B864	T279B
B866	T378B
B867	T572B
B868	T464G
B868	T470G
B869	T551B
B870	T226G
B874	T222B
B874	T462G
B879	T124G
B880	T474G
B883	T669B
B885	T914B
B886	T168B
B887	T744G
B889	T728B
B891	T363B
B895	T799B
B897	T795B
B898	T747B
B924	T396P
B926	T522P
B928	T746P
B932	T966B
B933	T927P
B933	T983P
B937	T640P
B939	T540B
B942	T611B
B945	T182P
B947	T636B
B950	T123P
B953	T521B
B955	T612B
B957	T400P
B957	T926P
B957	T968P
B959	T548G
B963	T231B
B963	T835B
B964	T160B
B966	T872B
B966	T873B
B967	T960B
B972	T440B

Bosch	TESLA
B972	T736B
B974	T902B
B975	T710B
B980	T699B
B980	T738B
B982	T236B
B983	T351B
B984	T456B
B984	T912B
B987	T711B
B988	T441B
B990	T524B
B992	T117B
BW054	T916B
BW238	T917B
BW243	T900B
BW244	T915B
BW250	T321B
BW252	T708B
BW253	T767B
BW254	T320B
BW254	T705B
BW255	T841B
BW256	T921B
BW256	T930B
BW256	T949B
BW257	T164G
BW258	T997B
BW261	T845B
BW269	T879B
BW270	T107B
ES826	T824C
ES829	T554B
ES841	T242B
ES843	T389C
ES846	T177C
ES854	T552C
ES871	T742C
ES879	T211C
ES880	T211C
ES881	T757C
ES881	T897B
ES946	T210C
ES947	T210C
WA30	T178B
Bougicord	**TESLA**
1142	T909B
1413	T669B
1416	T320B
1417	T160B
1420	T670B
1420	T840B
1429	T767B
1431	T960B
1434	T159B
1439	T316B
1443	T319B
2421	T311B
2421	T858B
2421	T914B

Bougicord	TESLA
2425	T705B
2445	T318B
2445	T577B
2456	T321B
2457	T708B
2458	T841B
2459	T949B
2492	T706B
2496	T217B
2541	T304B
3192	T435B
3337	T381B
3373	T291B
3373	T906B
3379	T218B
3398	T728B
3466	T671B
3519	T290B
3545	T721B
3545	T827B
4002	T195H
4003	T530B
4003	T615B
4003	T946B
4006	T499B
4007	T369S
4007	T444B
4007	T456B
4007	T480B
4007	T602B
4007	T912B
4008	T325B
4011	T663B
4014	T122H
4014	T122B
4015	T441B
4017	T364B
4020	T109B
4020	T283B
4021	T229B
4021	T557B
4021	T835B
4027	T231B
4027	T261B
4027	T386B
4027	T481B
4027	T488B
4027	T898B
4038	T425B
4060	T246B
4060	T275B
4060	T795B
4060	T796B
4081	T129B
4086	T378B
4102	T651C
4105	T176C
4106	T717C
4107	T940C
4112	T269B

Bougicord	TESLA
4112	T288B
4112	T765B
4113	T656C
4115	T742C
4116	T611B
4116	T612B
4119	T266B
4119	T327B
4119	T328B
4119	T423B
4119	T489B
4119	T491B
4120	T326B
4121	T466G
4122	T162B
4122	T168B
4122	T267B
4122	T287B
4123	T166B
4123	T179B
4123	T268B
4123	T764B
4126	T440B
4126	T736B
4128	T698B
4128	T737B
4147	T501G
4148	T227G
4149	T164G
4149	T410G
4150	T744G
4152	T286B
4152	T558B
4152	T629B
4152	T766B
4153	T446B
4156	T881C
4157	T880C
4158	T722B
4159	T830B
4162	T242B
4163	T289C
4163	T778C
4163	T928C
4164	T274B
4164	T278B
4164	T279B
4164	T882B
4167	T760B
4169	T176C
4173	T406C
4173	T855C
4173	T856C
4177	T554B
4178	T726G
4178	T972G
4179	T208B
4193	T995G
4195	T818C
4200	T292C

Bougicord	TESLA
4204	T997B
4206	T998B
4303	T494B
4304	T905B
4306	T598B
4310	T496B
4319	T817B
4325	T216B
4326	T959B
4331	T497B
4331	T552C
4333	T498B
4334	T815B
4404	T303B
4404	T492B
4404	T908B
4405	T606B
4405	T647B
4474	T196B
4486	T707B
4486	T786B
4486	T787B
4486	T792B
5101	T780C
5214	T950C
5214	T951C
6202	T427B
6203	T204B
6203	T878B
6204	T596B
6206	T240B
6307	T518B
6307	T924B
6424	T199B
6431	T607B
6431	T608B
6435	T380B
6442	T917B
6467	T915B
6468	T916B
6475	T382B
6503	T779C
6518	T934B
6521	T373B
6521	T374B
6522	T935B
6530	T105B
6530	T936B
6530	T938B
6812	T385B
6819	T506B
6819	T999B
6820	T848B
6820	T849B
7103	T389C
7103	T824C
7104	T205B
7111	T191B
7113	T206C
7117	T784B

Bougicord	TESLA
7120	T132B
7120	T133B
7125	T152G
7125	T460G
7126	T124G
7129	T837B
7131	T120B
7135	T899B
7136	T254B
7136	T487B
7140	T324B
7140	T407B
7140	T850B
7145	T556B
7148	T570B
7149	T895B
7150	T555B
7150	T980B
7151	T548G
7151	T871B
7151	T872B
7153	T801C
7154	T391C
7163	T931C
7165	T710B
7167	T769B
7170	T531B
7171	T503B
7172	T505B
7172	T902B
7176	T264B
7176	T265B
7179	T520B
7180	T149B
7187	T636B
7191	T983P
7192	T522P
7193	T400P
7193	T401P
7193	T746P
7194	T402P
7195	T640P
7199	T398P
7201	T396P
7205	T363B
7210	T230B
7214	T561B
7215	T699B
7215	T711B
7215	T738B
7217	T228G
7218	T474G
7219	T224G
7219	T225G
7219	T462G
7220	T146G
7220	T285B
7220	T294B
7220	T459G
7220	T464G

Bougicord	TESLA
7220	T470G
7220	T476G
7229	T260B
7230	T574B
7232	T862B
7233	T560B
7233	T562B
7233	T571B
7233	T985B
7234	T250B
7236	T666B
7237	T502B
7238	T913B
7239	T323B
7240	T800C
7240	T952C
7241	T271B
7241	T962B
7255	T220B
7255	T458B
7260	T222B
7260	T239B
7262	T455B
7264	T241B
7266	T551B
7269	T244B
7270	T723B
7282	T829B
7285	T550B
7285	T645B
7291	T974B
7293	T138B
7409	T521B
7412	T523B
7414	T799B
7414	T902B
7415	T644B
7415	T735B
7416	T100C
7419	T500G
7419	T894G
7420	T709B
7421	T854C
7423	T559C
7919	T463G
7929	T763B
8001	T482B
8106	T524B
8106	T747B
8106	T901B
8109	T887C
8111	T569B
8112	T178B
8113	T631B
8114	T495B
8115	T317B
8120	T383B
9220	T700C
9220	T920C
9221	T437B

Bougicord	TESLA
9223	T174C
9225	T175C
9226	T716C
9227	T740C
9230	T741C
9231	T646C
9231	T649C
9231	T650C
9231	T654C
9231	T821C
9235	T601C
9235	T714C
9379	T675C
9433	T703C
9436	T642C
9436	T819C
9437	T658C
9490	T662C
9498	T103C
9504	T657C
9505	T590C
9505	T591C
9505	T592C
9509	T807C
9512	T173C
9514	T806C
9525	T869C
9526	T177C
9528	T918C
9529	T823C
9535	T701C
9608	T593C
9608	T702C
9612	T104C
9612	T843C
9679	T877C
9700	T353C
9702	T842C
9704	T457C
9732	T812C
9751	T876C
9752	T958C
9768	T941C
9793	T599C
9795	T211C
9797	T589C
9805	T782C
9820	T757C
9836	T743C
9840	T808C
9841	T622C
9857	T674C
9859	T102C
9859	T153C
9859	T659C
9865	T802C
9871	T165C
9873	T633C
40003	T625S

Bremi	TESLA
225	T623C
226	T624C
227	T805C
236	T702C
244	T595C
251	T869C
252	T591C
253	T589C
256	T941C
258	T740C
261	T931C
263	T741C
265	T807C
266	T703C
267	T649C
270	T657C
271	T646C
272	T662C
274	T701C
280	T806C
295	T820C
296B	T821C
403	T971C
404	T932C
426	T881C
427	T880C
430	T391C
447	T700C
481	T650C
539	T654C
565	T208B
906	T920C
909	T353B
912	T599C
913	T210C
915	T389C
919	T920C
922	T824C
924	T651C
927	T206C
928	T877C
930	T802C
931	T593C
932	T242B
933	T808C
954	T103C
955	T876C
956	T812C
957	T554B
959	T843C
960	T922C
962	T104C
963	T800C
964	T942C
970	T675C
973	T958C
975	T592C
977	T842C
978	T819C
979	T757C

Bremi > TESLA ▶

Bremi	TESLA
979	T897B
981	T626C
983	T982C
987	T642C
989	T658C
990	T656C
992	T601C
993	T590C
994	T177C
995	T552C
997	T918C
998	T952C
106M200	T854C
203/200	T811C
205/200	T101C
205E200	T153C
205F200	T102C
205H200	T659C
206F200	T855C
206N200	T856C
206P200	T854C
212AD200	T165C
212F200	T823C
220G200	T874C
220J200	T874C
222D200	T818C
222G200	T559C
229AB200	T622C
229K200	T803C
233/200	T887C
233H200	T674C
281/100	T782C
287/200	T781C
300/104	T425B
300/110	T204B
300/111	T427B
300/144	T527B
300/176	T128B
300/210	T456B
300/213	T724B
300/220	T133B
300/290	T229B
300/291	T231B
300/294	T835B
300/296	T239B
300/307	T355S
300/308	T455B
300/320	T241B
300/326	T246B
300/329	T489B
300/374	T762B
300/378	T283B
300/380	T763B
300/381	T168B
300/382	T769B
300/386	T179B
300/387	T163B
300/388	T284B
300/389	T280B
300/390	T288B

Bremi	TESLA
300/391	T271B
300/392	T883B
300/395	T278B
300/396	T279B
300/397	T166B
300/409	T487B
300/423	T254B
300/436	T260B
300/440	T261B
300/521	T166B
300/528	T268B
300/528	T764B
300/529	T267B
300/575	T374B
300/590	T407B
300/591	T324B
300/601	T817B
300/643	T837B
300/648	T322B
300/649	T929B
300/652	T962B
300/655	T996B
300/667	T274B
300/673	T289C
300/673	T778C
300/674	T950C
300/675	T777C
300/676	T120B
300/678	T629B
300/679	T870B
300/685	T286B
300/687	T558B
300/688	T862B
300/689	T951C
300/694	T765B
300/695	T795B
300/696	T797B
300/698	T508B
300/699	T509B
300/703	T902B
300/704	T503B
300/705	T901B
300/706	T502B
300/708	T799B
300/709	T976B
300/711	T556B
300/711	T980B
300/713	T780C
300/715	T555B
300/720	T779C
300/721	T440B
300/721	T736B
300/722	T698B
300/722	T737B
300/723	T710B
300/724	T663B
300/727	T562B
300/728	T571B
300/729	T563B
300/730	T302B

Bremi	TESLA
300/731	T564B
300/733	T569B
300/735	T666B
300/736	T560B
300/737	T567B
300/738	T975B
300/739	T561B
300/740	T852B
300/743	T981B
300/746	T568B
300/747	T851B
300/748	T502B
300/751	T505B
300/754	T250B
300/755	T902B
300/758	T699B
300/758	T738B
300/759	T711B
300/762	T667B
300/764	T331B
300/766	T282B
300/767	T432B
300/768	T191B
300/770	T813B
300/771	T139B
300/774	T882B
300/775	T253B
300/776	T814B
300/779	T433B
300/781	T665B
300/785	T524B
300/787	T928C
300/788	T776B
300/789	T266B
300/789	T491B
300/790	T386B
300/792	T364B
300/829	T615B
300/869	T162B
300/877	T287B
300/884	T273B
300/885	T292C
300/887	T768B
300/888	T144B
300/903	T328B
300/903	T423B
300/912	T602B
300/913	T970B
300/914	T327B
300/919	T277B
300/920	T269B
300/923	T766B
300/923	T884B
300/951	T645B
300/958	T252B
300/987	T255B
300/988	T850B
300/989	T913B
326/670	T796B
339/48	T442B

Bremi	TESLA
3A00/101	T611B
3A00/102	T636B
3A00/108	T903B
3A00/110	T974B
3A00/111	T532B
3A00/113	T504B
3A00/114	T531B
3A00/116	T538B
3A00/117	T326B
3A00/120	T844B
3A00/125	T441B
3A00/129	T485B
3A00/131	T301B
3A00/132	T296B
3A00/134	T456B
3A00/137	T583B
3A00/138	T583B
3A00/140	T582B
3A00/142	T664B
3A00/145	T131B
3A00/153	T359S
3A00/155	T535B
3A00/157	T195H
3A00/158	T122H
3A00/159	T237B
3A00/162	T579B
3A00/164	T107B
3A00/166	T112B
3A00/167	T478B
3A00/168	T281B
3A00/169	T580B
3A00/172	T180B
3A00/174	T892B
3A00/175	T747B
3A00/177	T479B
3A00/178	T770B
3A00/179	T285B
3A00/180	T294B
3A00/183	T888B
3A00/185	T477B
3A00/186	T747B
3A00/187	T202B
3A00/188	T189B
3A00121	T446B
3A29	T739C
449A200	T801C
473/100	T714C
500/101	T522P
500/102	T402P
500/103	T640P
500/104	T983P
500/105	T746P
500/107	T396P
500/108	T398P
500/111	T968P
500/117	T927P
500/118	T926P
500/122	T537P
500/123	T209P
500/123	T444B

Bremi	TESLA
500/124	T123P
500/125	T616P
500/128	T588P
500/129	T399P
500/130	T247P
500/131	T401P
500/132	T400P
500/142	T533P
500/147	T638B
517/100	T175C
520/100	T940C
525/100	T115C
538/100	T174C
569/100	T176C
571/100	T173C
573/100	T114C
600/101	T669B
600/103	T858B
600/104	T321B
600/105	T792B
600/106	T900B
600/110	T728B
600/115	T598B
600/118	T815B
600/119	T574B
600/121	T381B
600/122	T199B
600/123	T916B
600/124	T915B
600/126	T849B
600/131	T707B
600/138	T497B
600/139	T959B
600/141	T609B
600/142	T608B
600/143	T498B
600/145	T378B
600/150	T304B
600/151	T706B
600/154	T215B
600/155	T435B
600/157	T291B
600/157	T906B
600/163	T668B
600/164	T671B
600/166	T290B
600/167	T721B
600/167	T827B
600/172	T318B
600/179	T494B
600/180	T496B
600/182	T830B
600/188	T196B
600/194	T320B
600/195	T606B
600/196	T917B
600/199	T708B
600/200	T709B
600/202	T159B
600/203	T670B

Bremi	TESLA
600/205	T767B
600/207	T705B
600/213	T373B
600/214	T934B
600/215	T845B
600/217	T722B
600/218	T551B
600/222	T879B
600/223	T597B
600/225	T848B
600/227	T506B
600/228	T847B
600/230	T895B
600/231	T895B
600/232	T847B
600/233	T846B
600/235	T230B
600/238	T325B
600/239	T760B
600/240	T482B
600/241	T899B
600/242	T507B
600/246	T575B
600/249	T265B
600/250	T385B
600/251	T938B
600/254	T572B
600/254	T572B
600/256	T871B
600/257	T999B
600/258	T352B
600/259	T542B
600/262	T785B
600/276	T550B
600/281	T380B
600/282	T607B
600/285	T914B
600/286	T113B
600/293	T363B
600/294	T363B
600/295	T521B
600/298	T924B
600/299	T964B
600/300	T149B
600/302	T873B
600/303	T872B
600/305	T878B
600/308	T840B
600/309	T960B
600/312	T244B
600/313	T977B
600/314	T784B
600/317	T311B
600/322	T543B
600/324	T217B
600/324	T909B
600/325	T647B
600/327	T541B
600/329	T570B
600/330	T847B

Bremi	TESLA
600/334	T577B
600/338	T787B
600/346	T723B
600/348	T557B
600/349	T129B
600/350	T132B
600/355	T458B
600/356	T221B
600/360	T205B
600/363	T530B
600/365	T848B
600/366	T786B
600/370	T935B
600/371	T735B
600/372	T936B
600/376	T617B
600/381	T547B
600/382	T648B
600/385	T644B
600/387	T933B
600/389	T908B
600/393	T481B
600/394	T480B
600/395	T963B
600/401	T898B
600/402	T218B
600/405	T264B
600/409	T912B
600/410	T109B
600/412	T841B
600/413	T930B
600/413	T949B
600/416	T222B
600/417	T985B
600/421	T791B
600/423	T443B
600/425	T518B
600/427	T997B
600/428	T998B
600/433	T105B
600/435	T600B
600/436	T499B
600/437	T829B
600/439	T220B
600/441	T455B
600/443	T822B
600/445	T300B
600/447	T110B
600/448	T966B
600/451	T245B
600/454	T815B
600/458	T828B
600/460	T756G
600/462	T431B
600/464	T512B
600/468	T637B
600/470	T308B
600/474	T118B
600/478	T116B
600/479	T967B

Bremi	TESLA
600/486	T117B
600/487	T117B
600/489	T240B
600/494	T523B
600/496	T465G
600/498	T319B
600/499	T232B
600/500	T520B
600/501	T570B
600/505	T181B
600/508	T468G
600/510	T631B
600/519	T585B
600/616	T216B
663/289	T160B
778RA	T732B
782/100	T437B
784A100	T717C
786/100	T716C
7A08	T349C
7A15	T170C
800/174	T972G
800/179	T164G
800/180	T410G
800/181	T124G
800/182	T462G
800/183	T152G
800/186	T474G
800/188	T140G
800/189	T500G
800/190	T726G
800/191	T188G
800/198	T143G
800/199	T228G
800/202	T130G
800/204	T125G
800/208	T476G
800/209	T146G
800/210	T501G
800/211	T164G
800/212	T223G
800/213	T227G
800/215	T773G
800/216	T789G
800/242	T459G
800/243	T460G
800/253	T225G
800/256	T464G
800/257	T224G
800/259	T466G
800/260	T470G
800/261	T141G
800/268	T965G
800/939	T744G
800L176	T549G
800L200	T548G
923/100	T633C
939B200	T857C
939C200	T578C
939C200	T857C

Bremi	TESLA
968G100	T874C
974/200	T810C
9A03/200	T365C
9A04	T809C
9A05	T457C
9A11	T211C
9A15/200	T387C
9A16	T743C
9A17	T865C
9A30B200	T406C
BYD	**TESLA**
12.02.00BD006G	T334B
Citroen	**TESLA**
5967.H2	T817B
5967.J9	T218B
5967.K6	T728B
5967.L0	T497B
5967.L7	T497B
5967.N2	T013B
5967.N2	T552C
5967.N6	T815B
5967.N7	T497B
5967.P1	T815B
95636601	T435B
95636605	T435B
95659594	T721B
95659594	T827B
95659598	T215B
95659600	T959B
96070983	T959B
97535465	T598B
9153775680	T728B
Dacia	**TESLA**
8200506297	T930B
Daewoo	**TESLA**
12087927	T737B
33700A78B03-000	T441B
33700A80D02-000	T150B
92060980	T737B
93740234	T198B
94582709	T150B
96211948	T711B
96256433	T441B
96288956	T888B
96291306	T892B
96305387	T738B
96342284	T553B
96450249	T923B
96497773	T711B
96518123	T441B
NP1147A	T147B
NP1149	T710B
NP1332	T147B
NP1332	T736B
Daihatsu	**TESLA**
19901-87186-000	T933B
19901-87188	T443B
19901-87189	T443B
19901-87A81	T443B
19901-87B84	T209P

Daihatsu	TESLA
19901-87B84	T444B
19901-87B87	T209P
Facet	**TESLA**
4.5532	T870B
4.7004	T644B
4.7005	T967B
4.7006	T888B
4.7007	T892B
4.7012	T585B
4.7013	T967B
4.7014	T532B
4.7018	T970B
4.7028	T512B
4.7029	T294B
4.7046	T667B
4.7049	T316B
4.7055	T279B
4.7059	T382B
4.7061	T917B
4.7064	T916B
4.7069	T810C
4.7082	T138B
4.7098	T560B
4.7106	T584B
4.7107	T131B
4.7111	T523B
4.7113	T538B
4.7118	T479B
4.7119	T747B
4.7120	T524B
4.7121	T119B
4.7122	T797B
4.7135	T535B
4.7136	T536B
4.7137	T478B
4.7141	T590C
4.7144	T550B
4.7151	T705B
4.7156	T662C
4.7158	T922C
4.7162	T649C
4.7170	T631B
4.7189	T795B
4.7208	T465G
4.7214	T573G
4.7229	T317B
4.7230	T319B
4.7234	T739C
4.7235	T309B
4.7236	T117B
4.7238	T308B
4.7238	T799B
4.7239	T236B
4.7241	T745B
4.7242	T972G
4.7244	T921B
4.7244	T930B
4.7245	T297B
4.7246	T495B
4.7248	T406C

Facet > TESLA ▶

Facet	TESLA
4.7249	T697B
4.7251	T295P
4.7255	T350B
4.8354	T132B
4.8354	T220B
4.8357	T446B
4.8372	T607B
4.8372	T915B
4.8374	T608B
4.8376	T199B
4.8379	T196B
4.8386	T128B
4.8389	T458B
4.8394	T829B
4.8398	T222B
4.8415	T858B
4.8417	T914B
4.8456	T543B
4.8466	T445B
4.8466	T455B
4.8471	T240B
4.8472	T135H
4.8491	T905B
4.8494	T498B
4.8503	T878B
4.8509	T762B
4.8510	T763B
4.8511	T134H
4.8513	T287B
4.8514	T162B
4.8514	T168B
4.8516	T166B
4.8524	T288B
4.8527	T163B
4.8531	T271B
4.8531	T274B
4.8539	T707B
4.8539	T786B
4.8539	T787B
4.8541	T792B
4.8550	T881C
4.8551	T880C
4.8555	T179B
4.8555	T882B
4.8573	T176C
4.8580	T173C
4.8584	T717C
4.8587	T174C
4.8598	T175C
4.8608	T385B
4.8612	T456B
4.8612	T912B
4.8613	T177C
4.8614	T784B
4.8615	T785B
4.8616	T722B
4.8619	T499B
4.8623	T824C
4.8626	T595C
4.8633	T600B

Facet	TESLA
4.8634	T766B
4.8634	T996B
4.8642	T596B
4.8647	T877C
4.8650	T542B
4.8655	T552C
4.8666	T958C
4.8671	T999B
4.8674	T497B
4.8677	T959B
4.8688	T289C
4.8688	T778C
4.8689	T322B
4.8692	T723B
4.8694	T242B
4.8700	T554B
4.8707	T791B
4.8716	T425B
4.8716	T427B
4.8725	T646C
4.8725	T650C
4.8725	T657C
4.8725	T821C
4.8748	T496B
4.8749	T290B
4.8764	T591C
4.8768	T593C
4.8768	T701C
4.8768	T702C
4.8768	T703C
4.8769	T869C
4.8792	T941C
4.8801	T321B
4.8802	T900B
4.8803	T669B
4.8808	T645B
4.8839	T908B
4.8846	T291B
4.8846	T906B
4.8857	T501G
4.8864	T744G
4.8884	T760B
4.8887	T977B
4.8888	T830B
4.8889	T551B
4.8900	T781C
4.8900	T810C
4.8900	T811C
4.8910	T781C
4.8920	T670B
4.8957	T144B
4.9002	T221B
4.9007	T410G
4.9024	T598B
4.9034	T668B
4.9040	T494B
4.9078	T146G
4.9078	T464G
4.9078	T470G
4.9078	T476G

Facet	TESLA
4.9121	T577B
4.9137	T934B
4.9138	T935B
4.9140	T373B
4.9140	T938B
4.9142	T160B
4.9145	T471G
4.9152	T215B
4.9152	T496B
4.9176	T228G
4.9189	T562B
4.9209	T746P
4.9231	T302B
4.9231	T556B
4.9237	T269B
4.9237	T962B
4.9277	T505B
4.9278	T502B
4.9281	T462G
4.9298	T114C
4.9299	T740C
4.9302	T741C
4.9305	T805C
4.9307	T806C
4.9309	T932C
4.9310	T931C
4.9315	T971C
4.9316	T623C
4.9318	T807C
4.9331	T129B
4.9331	T976B
4.9332	T606B
4.9332	T647B
4.9343	T139B
4.9344	T632P
4.9345	T477B
4.9350	T876C
4.9353	T952C
4.9356	T592C
4.9361	T597B
4.9362	T879B
4.9363	T757C
4.9363	T897B
4.9364	T820C
4.9366	T601C
4.9367	T828B
4.9373	T194S
4.9373	T195H
4.9374	T815B
4.9375	T122H
4.9375	T145H
4.9375	T371S
4.9376	T728B
4.9381	T507B
4.9381	T509B
4.9385	T118B
4.9390	T522P
4.9391	T504B
4.9393	T616P
4.9398	T239B

Facet	TESLA
4.9398	T795B
4.9398	T796B
4.9399	T848B
4.9401	T902B
4.9403	T902B
4.9403	T903B
4.9406	T443B
4.9407	T250B
4.9407	T974B
4.9410	T617B
4.9411	T506B
4.9417	T327B
4.9419	T698B
4.9419	T737B
4.9429	T232B
4.9432	T521B
4.9433	T710B
4.9434	T585B
4.9435	T400P
4.9435	T401P
4.9435	T968P
4.9438	T423B
4.9443	T841B
4.9445	T930B
4.9445	T949B
4.9446	T708B
4.9447	T767B
4.9451	T178B
4.9458	T887C
4.9463	T855C
4.9463	T856C
4.9468	T818C
4.9473	T674C
4.9484	T674C
4.9489	T559C
4.9491	T594C
4.9492	T960B
4.9494	T675C
4.9496	T909B
4.9498	T541B
4.9498	T840B
4.9501	T709B
4.9503	T845B
4.9504	T997B
4.9505	T998B
4.9507	T107B
4.9507	T110B
4.9508	T111B
4.9509	T923B
4.9511	T112B
4.9516	T842C
4.9527	T785B
4.9528	T277B
4.9529	T765B
4.9531	T629B
4.9532	T558B
4.9532	T929B
4.9535	T456B
4.9543	T105B
4.9543	T936B

Facet	TESLA
4.9549	T651C
4.9551	T104C
4.9559	T778C
4.9559	T928C
4.9562	T777C
4.9568	T790G
4.9568	T995G
4.9569	T642C
4.9570	T101C
4.9570	T102C
4.9575	T874C
4.9585	T854C
4.9590	T801C
4.9590	T918C
4.9601	T578C
4.9601	T857C
4.9605	T801C
4.9605	T918C
4.9607	T100C
4.9608	T599C
4.9609	T633C
4.9614	T965G
4.9619	T773G
4.9624	T726G
4.9625	T500G
4.9625	T894G
4.9625	T972G
4.9630	T227G
4.9634	T441B
4.9639	T164G
4.9640	T654C
4.9640	T658C
4.9641	T819C
4.9641	T865C
4.9643	T170C
4.9648	T809C
4.9649	T808C
4.9667	T942C
4.9669	T920C
4.9670	T656C
4.9673	T803C
4.9674	T198B
4.9675	T544B
4.9676	T545B
4.9677	T777C
4.9679	T113B
4.9680	T711B
4.9682	T700C
4.9684	T300B
4.9694	T812C
4.9700	T847B
4.9701	T230B
4.9701	T847B
4.9702	T847B
4.9703	T618P
4.9711	T895B
4.9711	T895B
4.9712	T846B
4.9713	T570B
4.9714	T570B

Facet	TESLA
4.9719	T116B
4.9723	T387C
4.9726	T622C
4.9727	T547B
4.9728	T572B
4.9728	T572B
4.9729	T247P
4.9730	T553B
4.9731	T699B
4.9731	T738B
4.9732	T933B
4.9737	T995G
4.9738	T980B
4.9739	T181B
4.9740	T245B
4.9741	T822B
4.9745	T555B
4.9747	T963B
4.9748	T481B
4.9748	T482B
4.9752	T837B
4.9753	T901B
4.9754	T531B
4.9755	T503B
4.9757	T246B
4.9757	T899B
4.9760	T873B
4.9761	T871B
4.9762	T872B
4.9764	T533P
4.9765	T714C
4.9767	T248P
4.9769	T574B
4.9770	T386B
4.9789	T575B
4.9792	T399P
4.9793	T983P
4.9794	T984P
4.9795	T583B
4.9798	T328B
4.9798	T844B
4.9802	T981B
4.9813	T579B
4.9814	T581B
4.9817	T180B
4.9819	T580B
4.9823	T966B
4.9825	T850B
4.9830	T913B
4.9835	T975B
4.9837	T254B
4.9841	T508B
4.9845	T238P
4.9849	T537P
4.9851	T527B
4.9855	T123P
4.9856	T927P
4.9858	T588P
4.9859	T396P
4.9860	T614P

Facet	TESLA
4.9861	T149B
4.9864	T520B
4.9865	T540B
4.9866	T530B
4.9867	T587P
4.9872	T640P
4.9873	T402P
4.9878	T518B
4.9879	T924B
4.9880	T926P
4.9881	T121B
4.9882	T251B
4.9883	T539P
4.9887	T582B
4.9888	T564B
4.9889	T565B
4.9892	T567B
4.9893	T561B
4.9894	T571B
4.9900	T331B
4.9904	T282B
4.9905	T862B
4.9906	T568B
4.9908	T569B
4.9914	T563B
4.9921	T782C
4.9932	T800C
4.9932	T843C
4.9933	T802C
4.9941	T286B
4.9942	T147B
4.9942	T267B
4.9942	T440B
4.9942	T736B
4.9947	T770B
4.9950	T779C
4.9953	T951C
4.9961	T780C
4.9964	T950C
4.9969	T780C
4.9976	T468G
4.9995	T266B
4.9996	T849B
Fiat	**TESLA**
46413088	T845B
46425912	T997B
46427497	T828B
46474814	T998B
46743086	T998B
46749624	T178B
46794811	T544B
55195775	T631B
55195776	T631B
60565978	T457C
60808437	T457C
72385585	T133B
7540530	T338B
7552294	T455B
7597720	T458B
7597831	T129B

Fiat	TESLA
7604227	T220B
7604227	T829B
76044977	T445B
7604907	T128B
7604907	T455B
7604977	T128B
7609395	T221B
7625943	T543B
7640245	T222B
7663681	T446B
7663681	T542B
7691327	T129B
7694366	T785B
7703186	T784B
7703382	T554B
7703383	T554B
7703530	T784B
7716092	T645B
7716094	T221B
7730698	T129B
7730973	T723B
7732522	T723B
7735100	T091B
7735100	T177C
7735397	T013B
7735397	T552C
7742005	T242B
7742689	T543B
7745367	T977B
7760523	T757C
7760523	T897B
7776810	T722B
7785350	T830B
7787458	T551B
82365463	T132B
9609493380	T497B
9619064880	T497B
Ford	**TESLA**
01111216	T468G
01111218	T468G
01111219	T468G
01111223	T468G
097203 1FSHE	T894G
106309	T476G
1012436	T227G
1012436	T726G
1037294	T410G
1063605	T474G
1063606	T225G
1063606	T462G
1063606	T463G
1063607	T140G
1063607	T225G
1063609	T459B
1063609	T464G
1063609	T470G
1063611	T466G
1063612	T228G
1063615	T227G
1063616	T460G

Ford	TESLA
1063617	T744G
1119840-43	T965G
1319060	T465G
1319061	T465G
1319062	T465G
1335369	T972G
1960394	T575B
1961207	T575B
3727286	T756G
3915089	T548G
4046769	T548G
4065976	T776B
4138501	T549G
4429613	T573G
5030261	T140G
5030261	T225G
6181474	T130G
6181478	T124G
6181478	T130G
6190250	T124G
6190350	T130G
6198909	T130G
6486347	T410G
6772370	T789G
6772377	T164G
6772377	T995G
6828806	T471G
6828807	T471G
6831204	T410G
7053862	T223G
7053866	T223G
7262796	T223G
7262798	T223G
F2RE12280AC	T995G
FP1318140B	T776B
GAZ	**TESLA**
4216.3707090-10	T676H
4216.3707090-10	T677S
4216.3707090-10	T678M
4062.3707244-10	T696H
4062.3707244-10	T712S
4062.3707244-10	T713M
Geely	**TESLA**
E120200008	T379B
Great Wall	**TESLA**
3707210-E07	T332B
370710040-E01	T370B
Honda	**TESLA**
32700-P0D-000	T895B
32700-P13-A00	T547B
32700-P14-A00	T846B
32700-P1G-E01	T847B
32700-P1J-E01	T847B
32700-P7A-G01	T847B
32700-PCA-003	T847B
32700-PEL-004	T847B
32700-PHK-003	T985B
32700-POA-A00	T232B
32700-PT0-000	T895B
32701-P07-000	T230B

Honda	TESLA
32702-P07-000	T230B
32703-P07-000	T230B
32704-P07-000	T230B
32720-P8A-A02	T648B
32722-P01-000	T570B
32722-P07-000	T230B
32722-P07-000	T847B
32722-P1G-E01	T230B
32722-P1K-E01	T570B
32722-P2A-000	T847B
32722-P75-A01	T985B
32722-PM7-000	T572B
32722-PM7-020	T572B
32722-PM7-B00	T572B
32722-PM7-B01	T572B
32722-PTT-000	T846B
Hyundai	**TESLA**
27420-03000	T350B
27440-03000	T350B
27450-03000	T350B
27501-02A00	T524B
27501-02A00	T837B
27501-02D00	T309B
27501-02D00	T524B
27501-02D00	T747B
27501-02H00	T747B
27501-22A00	T837B
27501-22B00	T747B
27501-23A00	T868B
27501-23B00	T868B
27501-23B01	T868B
27501-23B70	T868B
27501-24B00	T837B
27501-24B10	T837B
27501-24B10	T838B
27501-24B20	T479B
27501-24C10	T837B
27501-24C10	T838B
27501-26A00	T118B
27501-26A00	T523B
27501-26C00	T118B
27501-26C00	T523B
27501-26D00	T118B
27501-26D00	T523B
27501-32C00	T799B
27501-32F00	T308B
27501-33A00	T902B
27501-35B00	T120B
27501-37A00	T117B
27501-37B00	T117B
27501-38B00	T745B
27501-39A00	T238P
SD001043	T119B
Champion	**TESLA**
LS-09	T491B
LS-10	T466G
LS-14	T140G
LS-16	T162B
LS-18	T144B
LS-20	T129B

Champion > TESLA ▶

Champion	TESLA
LS-22	T261B
LS-25	T141G
LS-26	T501G
LS-27	T744G
LS-28	T164G
LS-28	T410G
LS-29	T228G
LS-30	T789G
LS-31	T570B
LS-32	T846B
LS-35	T168B
LS-36	T274B
LS-37	T882B
LS-38	T179B
LS-43	T721B
LS-44	T435B
LS-45	T671B
LS-46	T707B
LS-47	T647B
LS-49	T320B
LS-50	T496B
LS-51	T498B
LS-52	T494B
LS-53	T218B
LS-54	T792B
LS-70	T835B
LS-71	T321B
LS-72	T849B
LS-72	T999B
LS-73	T227G
LS-74	T571B
LS-76	T458B
LS-77	T908B
LS-80	T222B
LS-80	T229B
LS-80	T246B
LS-81	T231B
LS-82	T109B
LS-84	T132B
LS-86	T485B
LS-87	T494B
LS-89	T304B
LS-91	T288B
LS-93	T669B
LS-94	T991B
LS-95	T986B
LS-96	T916B
LS-97	T815B
LS-98	T497B
LS-99	T722B
LS-101	T784B
LS-103	T766B
LS-104	T560B
LS-105	T895B
LS-106	T012B
LS-107	T355S
LS-108	T356S
LS-109	T359S
LS-110	T358S
LS-111	T357S

Champion	TESLA
LS-112	T368S
LS-113	T195H
LS-114	T339B
LS-116	T833B
LS-117	T395S
LS-118	T774S
LS-120	T481B
LS-123	T670B
LS-124	T521B
LS-126	T124G
LS-127	T872B
LS-129	T163B
LS-130	T602B
LS-131	T607B
LS-132	T139B
LS-134	T968P
LS-135	T830B
LS-137	T611B
LS-138	T846B
LS-141	T837B
LS-142	T535B
LS-143	T992B
LS-144	T463G
LS-145	T311B
LS-146	T564B
LS-149	T709B
LS-150	T321B
LS-151	T900B
LS-152	T555B
LS-155	T795B
LS-156	T964B
LS-158	T540B
LS-162	T323B
LS-166	T773G
LS-167	T410G
LS-168	T548G
LS-170	T374B
LS-172	T708B
LS-173	T845B
LS-175	T897B
LS-176	T015B
LS-177	T900B
LS-178	T929B
LS-179	T962B
LS-180	T110B
LS-181	T765B
LS-182	T710B
LS-183	T760B
LS-184	T895B
LS-185	T736B
LS-186	T143G
LS-190	T503B
LS-200	T017B
LS-201	T044B
LS-202	T036B
LS-203	T050B
LS-204	T043B
LS-205	T038B
LS-206	T070B
LS-207	T058B

Champion	TESLA
LS-208	T087B
LS-210	T023B
LS-210	T174C
LS-211	T028B
LS-211	T176C
LS-212	T027B
LS-212	T173C
LS-213	T031B
LS-214	T437B
LS-215	T023B
LS-218	T070B
LS-219	T069B
LS-220	T053B
LS-221	T035B
LS-222	T032B
LS-223	T059B
LS-224	T060B
LS-225	T114C
LS-226	T059B
LS-227	T073B
LS-228	T059B
LS-229	T077B
LS-230	T079B
LS-232	T003B
LS-238	T002B
LS-300	T502B
LS-301	T917B
LS-302	T844B
LS-304	T464G
LS-305	T575B
LS-306	T776B
LS-307	T767B
LS-308	T644B
LS-309	T735B
LS-310	T443B
LS-311	T933B
LS-312	T444B
LS-313	T138B
LS-315	T279B
LS-316	T327B
LS-317	T913B
LS-317	T981B
LS-318	T569B
LS-319	T909B
LS-320	T026B
LS-321	T311B
LS-322	T226G
LS-323	T488B
LS-325	T521B
LS-326	T636B
LS-329	T895B
LS-330	T502B
LS-331	T817B
LS-332	T542B
LS-336	T500G
LS-338	T738B
LS-339	T711B
LS-340	T986B
LS-341	T737B
LS-342	T482B

Champion	TESLA
LS-343	T848B
LS-344	T518B
LS-346	T988B
LS-347	T902B
LS-349	T222B
LS-349	T239B
LS-351	T455B
LS-352	T645B
LS-353	T543B
LS-354	T924B
LS-357	T500G
LS-358	T057B
LS-359	T966B
LS-360	T149B
LS-362	T025B
LS-372	T331B
LS-383	T223G
LS-384	T616P
LS-390	T556B
LS-393	T160B
LS-399	T938B
LS-401	T123P
LS-402	T242B
LS-402	T722B
LS-404	T997B
LS-405	T785B
LS-406	T977B
LS-407	T458B
LS-408	T550B
LS-413	T009B
LS-415	T105B
LS-416	T548G
LS-419	T035B
LS-420	T993B
LS-421	T116B
LS-423	T599C
LS-428	T968P
LS-429	T986B
LS-435	T568B
LS-436	T006B
LS-437	T441B
LS-439	T028B
LS-441	T985B
LS-443	T968P
LS-445	T984P
LS-446	T536B
LS-447	T503B
LS-448	T927P
LS-450	T558B
LS-451	T230B
LS-452	T995G
LS-453	T004B
LS-454	T946B
LS-455	T088B
LS-456	T980B
LS-457	T443B
LS-458	T091B
LS-459	T537P
LS-460	T569B
LS-462	T073B

Champion	TESLA
LS-463	T962B
LS-465	T901B
LS-466	T975B
LS-467	T996B
LS-469	T895B
LS-470	T311B
LS-471	T226G
LS-473	T250B
LS-475	T123P
LS-477	T996B
LS-478	T962B
LS-479	T629B
LS-480	T563B
LS-483	T066B
LS-484	T915B
LS-485	T011B
LS-487	T531B
LS-488	T841B
LS-489	T518B
LS-490	T331B
LS-491	T025B
LS-492	T080B
LS-495	T897B
LS-497	T010B
LS-501	T949B
LS-502	T059B
LS-503	T079B
LS-505	T165C
LS-506	T991B
LS-507	T423B
LS-508	T533P
LS-509	T871B
LS-510	T992B
LS-511	T008B
LS-512	T815B
LS-513	T035B
LS-514	T131B
LS-515	T895B
LS-517	T747B
LS-518	T565B
LS-520	T917B
LS-521	T767B
LS-522	T057B
LS-524	T998B
LS-525	T159B
LS-526	T002B
LS-527	T559C
LS-528	T040B
LS-529	T081B
LS-530	T076B
LS-531	T083B
LS-532	T081B
LS-533	T078B
LS-534	T041B
LS-535	T965G
LS-539	T967B
Chery	**TESLA**
477F-3707130-60	T360B
S11-3707020CA	T335B
S12-3707130CA	T337B

Chevrolet	TESLA
12087927	T737B
96190263	T986B
92060980	T737B
93740234	T198B
94460220	T986B
96190263	T777C
96211948	T711B
96256433	T441B
96288956	T888B
96291306	T892B
96305387	T738B
96342284	T553B
96450249	T923B
96460220	T777C
96497773	T711B
96518123	T441B
96651945	T697B
96984195	T697B
33700A78B03-000	T441B
NP1147A	T147B
NP1149	T710B
NP1332	T147B
NP1332	T736B
04773841	T110B

Chrysler	TESLA
04773841	T110B
04883233	T110B
05017059AA	T191B
05019593AA	T477B
05072497AA	T107B
05083893AC	T107B
4773841	T111B
4797685	T139B
4883233	T110B
4883233AB	T110B
5018394AE	T112B
83507178	T191B
MD331092	T478B
MD997629	T813B

Janmor	TESLA
ABM1	T593C
ABM1	T702C
ABM11	T654C
ABM110	T349C
ABM11P	T654C
ABM11P	T045B
ABM12	T821C
ABM12P	T821C
ABM12P	T040B
ABM13	T651C
ABM13P	T651C
ABM13P	T036B
ABM18	T649C
ABM18P	T649C
ABM18P	T044B
ABM19	T646C
ABM19P	T646C
ABM19P	T043B
ABM1P	T702C
ABM1P	T039B

Janmor	TESLA
ABM2	T703C
ABM25	T920C
ABM29	T650C
ABM29P	T650C
ABM29P	T035B
ABM2P	T703C
ABM2P	T051B
ABM3	T701C
ABM31	T820C
ABM31P	T820C
ABM31P	T054B
ABM32	T657C
ABM32P	T657C
ABM32P	T086B
ABM33	T649C
ABM33P	T649C
ABM33P	T044B
ABM35	T649C
ABM35P	T649C
ABM35P	T044B
ABM36	T649C
ABM36P	T649C
ABM36P	T044B
ABM37	T714C
ABM38	T801C
ABM38	T918C
ABM39	T662C
ABM39P	T662C
ABM39P	T037B
ABM3P	T701C
ABM3P	T038B
ABM4	T700C
ABM40	T941C
ABM40P	T941C
ABM40P	T020B
ABM41	T941C
ABM41P	T941C
ABM41P	T020B
ABM42	T591C
ABM42P	T591C
ABM43	T941C
ABM43P	T941C
ABM43P	T020B
ABM44	T589C
ABM44P	T589C
ABM45	T869C
ABM45P	T869C
ABM45P	T073B
ABM46	T590C
ABM46	T591C
ABM46P	T591C
ABM47	T658C
ABM47P	T658C
ABM47P	T048B
ABM48	T650C
ABM48P	T650C
ABM48P	T035B
ABM49	T674C
ABM4P	T700C
ABM4P	T050B

Janmor	TESLA
ABM50	T702C
ABM50P	T702C
ABM50P	T039B
ABM51	T952C
ABM52	T592C
ABM53	T675C
ABM54	T869C
ABM55	T601C
ABM56	T651C
ABM56P	T651C
ABM56P	T036B
ABM57	T819C
ABM57	T865C
ABM57P	T865C
ABM57P	T055B
ABM58	T633C
ABM58P	T633C
ABM58P	T041B
ABM59	T650C
ABM59P	T650C
ABM59P	T035B
ABM60	T800C
ABM61	T104C
ABM62	T843C
ABM63	T646C
ABM63P	T646C
ABM63P	T043B
ABM64	T843C
ABM65	T594C
ABM65	T088B
ABM66	T818C
ABM66	T002B
ABM67	T842C
ABM67	T006B
ABM68	T874C
ABM68	T004B
ABM69	T642C
ABM70	T823C
ABM73	T642C
ABM74	T633C
ABM75	T942C
ABM76	T650C
ABM77	T922C
ABM78	T061B
ABM78	T803C
ABM79	T803C
ABM79	T061B
ABM80	T578C
ABM80	T857C
ABM80	T074B
ABM80	T079B
ABM81	T102C
ABM81	T153C
ABM81	T659C
ABM82	T855C
ABM82	T077B
ABM83	T165C
ABM84	T559C
ABM85	T102C
ABM89	T887C

Janmor	TESLA
ABM89	T003B
ABM90	T674C
ABM90	T059B
ABM91	T818C
ABM91	T002B
ABM92	T854C
ABM92	T076B
ABS15	T109B
ABS16	T109B
ABS17	T109B
ABS20	T456B
ABS21	T912B
ABS22	T456B
ABS23	T456B
ABS24	T456B
ABS30	T732B
ABS34	T368S
ABS5	T499B
ABS5	T732B
ABU1	T039B
ABU1	T428B
ABU11	T045B
ABU12	T040B
ABU13	T036B
ABU15	T109B
ABU16	T109B
ABU17	T109B
ABU18	T044B
ABU18	T730B
ABU19	T043B
ABU2	T051B
ABU20	T456B
ABU21	T912B
ABU22	T456B
ABU23	T456B
ABU24	T456B
ABU25	T057B
ABU29	T035B
ABU29	T731B
ABU3	T038B
ABU3	T207B
ABU30	T732B
ABU31	T054B
ABU32	T086B
ABU32	T734B
ABU33	T044B
ABU33	T730B
ABU34	T122H
ABU35	T044B
ABU35	T730B
ABU36	T044B
ABU36	T730B
ABU37	T017B
ABU38	T060B
ABU39	T037B
ABU4	T050B
ABU4	T429B
ABU40	T020B
ABU41	T020B
ABU43	T020B

Janmor	TESLA
ABU45	T073B
ABU47	T048B
ABU48	T035B
ABU48	T731B
ABU49	T059B
ABU5	T732B
ABU50	T039B
ABU50	T428B
ABU51	T068B
ABU54	T073B
ABU55	T016B
ABU56	T036B
ABU57	T055B
ABU58	T041B
ABU59	T035B
ABU59	T731B
ABU60	T064B
ABU61	T084B
ABU62	T066B
ABU63	T043B
ABU64	T066B
ABU69	T042B
ABU70	T062B
ABU73	T042B
ABU74	T041B
ABU75	T067B
ABU76	T035B
ABU76	T731B
ABU77	T019B
AFM54	T878B
AFM55	T876C
AFM55	T014B
AFM61	T599C
AFM63	T812C
AFM63	T025B
AFM64	T824C
AFM64	T026B
AFM68	T389C
AFM69	T353C
AFM70	T100C
AFM77	T457C
AFM77	T595C
AFM78	T877C
AFM79	T958C
AFS51	T878B
AFS52	T878B
AFS53	T878B
AFS57	T425B
AFS59	T425B
AFS72	T204B
AFS72	T427B
AFS82	T597B
AM15	T111B
AM73	T112B
AM74	T107B
AM75	T477B
AM92	T697B
CPS1	T435B
CPS10	T218B
CPS12	T959B

Janmor > TESLA ▶

Janmor	TESLA
CPS13	T728B
CPS14	T497B
CPS16	T815B
CPS17	T598B
CPS18	T817B
CPS19	T724B
CPS2	T435B
CPS20	T817B
CPS3	T721B
CPS3	T827B
CPS4	T291B
CPS4	T906B
CPS5	T290B
CPS6	T494B
CPS7	T905B
CPS8	T671B
CPS9	T215B
CPU1	T435B
CPU10	T218B
CPU12	T959B
CPU13	T728B
CPU14	T497B
CPU16	T815B
CPU17	T598B
CPU18	T817B
CPU19	T724B
CPU2	T435B
CPU20	T817B
CPU3	T827B
CPU4	T906B
CPU5	T290B
CPU6	T494B
CPU7	T905B
CPU8	T671B
D10S	T832B
D11S	T833B
D12S	T834B
D13E	T339B
D13S	T339B
D13U	T339B
D15S	T395S
D16S	T777C
D16S	T986B
D1E	T441B
D1S	T441B
D2E	T441B
D2S	T441B
D3S	T440B
D3S	T736B
D4S	T710B
D5S	T698B
D5S	T737B
D6S	T699B
D6S	T738B
D7S	T711B
D8S	T711B
E01	T336B
E02	T338B
E08	T668B
E11	T122H

Janmor	TESLA
E12	T195H
E14	T419H
E15	T634H
E16	T134H
E17	T135H
E19	T342H
E22	T394S
E25	T348H
E26	T424S
E31	T346H
E34	T403H
E37	T145H
FAM20	T830B
FAM36	T242B
FAS1	T723B
FAS10	T830B
FAS11	T977B
FAS12	T222B
FAS13	T550B
FAS14	T542B
FAS15	T543B
FAS16	T829B
FAS17	T722B
FAS18	T645B
FAS19	T723B
FAS2	T455B
FAS20	T830B
FAS21	T757C
FAS21	T897B
FAS22	T551B
FAS23	T732B
FAS24	T845B
FAS25	T997B
FAS26	T722B
FAS27	T554B
FAS28	T830B
FAS29	T239B
FAS3	T129B
FAS3	T445B
FAS3	T976B
FAS30	T791B
FAS30	T829B
FAS31	T240B
FAS32	T543B
FAS33	T723B
FAS35	T828B
FAS37	T998B
FAS38	T631B
FAS39	T542B
FAS40	T845B
FAS5	T645B
FAS6	T132B
FAS8	T458B
FAU1	T723B
FAU10	T830B
FAU11	T977B
FAU12	T222B
FAU16	T829B
FAU17	T722B
FAU18	T645B

Janmor	TESLA
FAU19	T723B
FAU2	T455B
FAU22	T551B
FAU26	T722B
FAU28	T830B
FAU3	T129B
FAU30	T829B
FAU33	T723B
FAU5	T645B
FS1	T140G
FS10	T164G
FS10	T410G
FS11	T227G
FS12	T152G
FS12	T460G
FS13	T744G
FS14	T141G
FS15	T463G
FS16	T789G
FS17	T501G
FS18	T467G
FS2	T462G
FS2	T463G
FS20	T500B
FS20	T726G
FS21	T548G
FS23	T894G
FS27	T226G
FS28	T726G
FS29	T995G
FS3	T463G
FS30	T164G
FS31	T773G
FS32	T140G
FS33	T789G
FS34	T744G
FS35	T228G
FS36	T224G
FS39	T193G
FS4	T469G
FS41	T756G
FS49	T549G
FS5	T470G
FS50	T297B
FS50	T965B
FS51	T972G
FS6	T146G
FS6	T459G
FS7	T466G
FS8	T228G
FS9	T124G
FU1	T140G
FU10	T410G
FU11	T227G
FU12	T152G
FU13	T744G
FU14	T141G
FU15	T463G
FU16	T789G
FU18	T467G

Janmor	TESLA
FU2	T463G
FU20	T726G
FU21	T548G
FU23	T894G
FU28	T726G
FU29	T995G
FU3	T463G
FU30	T164G
FU31	T773G
FU32	T140G
FU33	T789G
FU34	T744G
FU35	T228G
FU36	T224G
FU4	T469G
FU5	T470G
FU6	T459G
FU7	T466G
FU8	T228G
FU9	T224G
HR1	T437B
HR11	T175C
HR11	T886C
HR11	T033B
HR12	T781C
HR12	T032B
HR13	T782C
HR15	T116B
HR2	T176C
HR2	T907C
HR2	T028B
HR3	T176C
HR3	T907C
HR3	T028B
HR4	T114C
HR5	T717C
HR5	T023B
HR6	T718C
HR6	T031B
HR7	T716C
HR7	T035B
HR8	T173C
HR8	T715C
HR8	T027B
HR9	T940C
HR9	T029B
JM1200S	T383B
JP100	T933B
JP101	T572B
JP101	T846B
JP102	T847B
JP103	T895B
JP104	T570B
JP104	T846B
JP105	T895B
JP106	T363B
JP108	T868B
JP110	T482B
JP110	T964B
JP111	T556B

Janmor	TESLA
JP112	T555B
JP114	T980B
JP115	T773G
JP116	T502B
JP117	T385B
JP118	T848B
JP119	T849B
JP121	T506B
JP122	T975B
JP122	T981B
JP123	T644B
JP124	T735B
JP125	T760B
JP126	T967B
JP127	T512B
JP128	T521B
JP131	T924B
JP133	T281B
JP135	T520B
JP137	T508B
JP138	T508B
JP139	T265B
JP141	T386B
JP143	T849B
JP143	T999B
JP144	T261B
JP150	T540B
JP151	T540B
JP154	T980B
JP155	T776B
JP156	T507B
JP157	T556B
JP159	T229B
JP161	T895B
JP161/703	T985B
JP162	T895B
JP163	T846B
JP164	T895B
JP165	T547B
JP165	T895B
JP166	T847B
JP168	T505B
JP168	T902B
JP169	T504B
JP169	T531B
JP171	T536B
JP172	T903B
JP174	T583B
JP175	T850B
JP176	T443B
JP177	T444B
JP178	T117B
JP179	T872B
JP180	T873B
JP181	T236B
JP182	T523B
JP183	T251B
JP184	T648B
JP194	T237B
JP195	T509B

Janmor	TESLA
JP200	T533P
JP203	T522P
JP204	T983P
JP206	T968P
JP208	T537P
JP210	T396P
JP215	T400P
JP216	T123P
JP217	T616P
JP218	T401P
JP219	T618P
JP221	T614P
JP224	T640P
JP225	T402P
JP227	T927P
JP228	T927P
JP229	T927P
JP230	T927P
JP300	T851B
JP301	T852B
JP302	T250B
JP303	T250B
JP304	T524B
JP305	T120B
JP307	T615B
JP308	T262B
JP310	T602B
JP311	T488B
JP312	T325B
JP313	T326B
JP313	T844B
JP315	T255B
JP316	T323B
JP317	T254B
JP318	T423B
JP319	T482B
JP320	T482B
JP321	T747B
JP322	T901B
JP323	T407B
JP323	T850B
JP324	T252B
JP325	T231B
JP325	T328B
JP325	T835B
JP327	T254B
JP328	T850B
JP330	T479B
JP330	T837B
JP331	T252B
JP332	T301B
JP332	T899B
JP333	T488B
JP334	T266B
JP335	T444B
JP336	T532B
JP336	T535B
JP337	T252B
JP339	T611B
JP341	T795B

Janmor	TESLA
JP342	T796B
JP343	T797B
JP344	T799B
JP345	T822B
JP347	T898B
JP348	T898B
JP349	T480B
JP351	T305B
JP352	T527B
JP354	T327B
JP355	T574B
JP356	T946B
JP358	T492B
JP366	T612B
JP367	T966B
JP374	T901B
JP375	T527B
JPE100	T933B
JPE101	T846B
JPE108	T868B
JPE110	T482B
JPE111	T556B
JPE112	T555B
JPE114	T980B
JPE116	T502B
JPE118	T848B
JPE119	T849B
JPE123	T644B
JPE124	T735B
JPE126	T967B
JPE127	T512B
JPE128	T521B
JPE131	T924B
JPE135	T520B
JPE137	T508B
JPE138	T508B
JPE143	T849B
JPE144	T261B
JPE150	T540B
JPE151	T540B
JPE154	T980B
JPE157	T556B
JPE159	T229B
JPE161	T895B
JPE162	T895B
JPE163	T846B
JPE164	T895B
JPE165	T895B
JPE166	T847B
JPE168	T902B
JPE169	T504B
JPE171	T536B
JPE172	T903B
JPE174	T583B
JPE175	T850B
JPE176	T443B
JPE177	T444B
JPE178	T117B
JPE179	T872B
JPE180	T873B

Janmor	TESLA
JPE182	T523B
LR13	T112B
LR7	T813B
M1	T805C
M1	T009B
M10	T742C
M11	T742C
M12	T742C
M13	T741C
M13	T070B
M13	T620B
M14	T931C
M14	T087B
M15	T741C
M15	T070B
M15	T620B
M16	T806C
M16	T007B
M17	T932C
M17	T001B
M18	T971C
M18	T058B
M19	T808C
M19	T071B
M2	T807C
M2	T008B
M20	T743C
M20	T010B
M20	T982C
M22	T809C
M22	T072B
M25	T390C
M3	T740C
M3	T069B
M3	T619B
M4	T741C
M4	T070B
M4	T620B
M5	T740C
M5	T391C
M5	T069B
M5	T619B
M6	T932C
M6	T001B
M61	T433B
M63	T432B
M7	T742C
M8	T740C
M8	T069B
M8	T619B
ODM215	T881C
ODM216	T881C
ODM222	T778C
ODM222	T987B
ODM245	T928C
ODM246	T777C
ODS201	T762B
ODS202	T763B
ODS203	T162B
ODS204	T166B

Janmor	TESLA
ODS205	T764B
ODS207	T279B
ODS209	T288B
ODS211	T271B
ODS212	T163B
ODS213	T271B
ODS215	T011B
ODS216	T011B
ODS217	T292C
ODS218	T166B
ODS220	T278B
ODS221	T629B
ODS222	T989B
ODS223	T322B
ODS224	T144B
ODS226	T862B
ODS227	T765B
ODS228	T277B
ODS229	T765B
ODS230	T629B
ODS231	T558B
ODS232	T162B
ODS233	T283B
ODS234	T769B
ODS235	T284B
ODS236	T275B
ODS237	T168B
ODS238	T769B
ODS239	T280B
ODS240	T950C
ODS240	T992B
ODS241	T777C
ODS241	T986B
ODS242	T286B
ODS243	T780C
ODS243	T988B
ODS244	T928C
ODS244	T991B
ODS245	T991B
ODS246	T986B
ODS247	T282B
ODS247	T629B
ODS249	T275B
ODS250	T273B
ODU201	T762B
ODU202	T763B
ODU203	T162B
ODU204	T166B
ODU205	T764B
ODU207	T279B
ODU209	T288B
ODU211	T271B
ODU213	T271B
ODU218	T166B
ODU220	T278B
ODU221	T629B
ODU223	T322B
ODU224	T144B
ODU227	T765B
ODU229	T765B

Janmor	TESLA
ODU230	T629B
ODU231	T558B
ODU232	T162B
ODU233	T283B
ODU234	T769B
ODU235	T284B
ODU236	T275B
ODU237	T168B
ODU238	T769B
ODU239	T280B
ODU240	T992B
ODU241	T986B
ODU243	T988B
ODU244	T991B
ODU247	T629B
ODU249	T275B
ODU250	T273B
RB1	T321B
RB10	T908B
RB11	T304B
RB13	T786B
RB14	T900B
RB16	T767B
RB17	T160B
RB19	T708B
RB2	T908B
RB20	T909B
RB21	T311B
RB21	T320B
RB22	T160B
RB23	T311B
RB24	T705B
RB25	T841B
RB26	T159B
RB28	T840B
RB29	T709B
RB3	T908B
RB31	T316B
RB34	T921B
RB34	T930B
RB4	T647B
RB6	T311B
RB6	T792B
RB7	T669B
RB8	T670B
RB9	T705B
RBU1	T321B
RBU10	T908B
RBU11	T304B
RBU13	T786B
RBU14	T900B
RBU16	T767B
RBU17	T160B
RBU19	T708B
RBU2	T908B
RBU20	T909B
RBU21	T311B
RBU22	T160B
RBU23	T311B
RBU24	T705B

Janmor > TESLA ▶

Janmor	TESLA
RBU25	T841B
RBU26	T159B
RBU28	T840B
RBU29	T709B
RBU3	T908B
RBU4	T647B
RBU6	T311B
RBU6	T792B
RBU7	T669B
RBU8	T670B
RBU9	T705B
RUS11	T666B
RVS10	T569B
RVS12	T560B
RVS13	T567B
RVS14	T561B
RVS16	T568B
RVS18	T364B
RVS25	T565B
RVS26	T365C
RVS27	T667B
RVS30	T138B
RVS32	T442B
RVS33	T331B
RVS35	T131B
RVS36	T138B
RVS4	T366B
RVS6	T562B
RVS7	T571B
RVS8	T563B
S01	T336B
S02	T338B
S03	T338B
S05	T784B
S06	T785B
S08	T668B
S09	T668B
S10	T369S
S11	T368S
S12	T372S
S13	T367S
S14	T418S
S14	T420M
S15	T635S
S16	T355S
S16	T412M
S17	T356S
S17	T413M
S18	T395S
S18	T514M
S18	T684H
S19	T358S
S19	T415M
S22	T394S
S22	T513M
S23	T625S
S24	T643S
S25	T348H
S26	T424S
S34	T627S

Janmor	TESLA
S34	T704M
S35	T516M
S35	T774S
S36	T696H
S36	T712S
S36	T713M
S37	T371S
SBS10	T373B
SBS2	T374B
SBS3	T779C
SBS3	T989B
SBS5	T934B
SBS6	T938B
SBS7	T935B
SBS8	T936B
SBS9	T105B
U01	T336B
U02	T338B
U03	T338B
U05	T784B
U06	T785B
U08	T668B
U09	T668B
U10	T369S
U11	T122H
U12	T195H
U13	T137H
U14	T419H
U15	T634H
U16	T134H
U17	T135H
U19	T342H
U25	T348H
U26	T424S
U31	T346H
U37	T145H
VL1	T378B
VL10	T609B
VL11	T914B
VL12	T607B
VL12	T608B
VL13	T915B
VL15	T917B
VL16	T199B
VL17	T916B
VL18	T916B
VL19	T382B
VL3	T380B
VL5	T381B
VL6	T606B
VL7	T196B
VL8	T378B
VL9	T858B
Jeep	**TESLA**
04728038	T202B
04728038AF	T202B
04728038AC	T202B
83300155	T433B
83507180	T432B

Kia	TESLA
0K01118140C	T797B
0K013-18-052A	T508B
0K20118140	T796B
0K247-18-160A	T508B
0K247-18-180A	T508B
0K30A18140A	T527B
0K30B18140	T527B
0K30E-18-140	T236B
0K30F-18-140	T236B
0K558-18-140B	T237B
0K95H-18-14XA	T237B
0K9A418140B	T509B
0K9A418150B	T509B
0K9A418150C	T509B
27400-2X-140	T236B
27501-26D00	T118B
27501-33A00	T902B
KK13718140A	T795B
Lancia	**TESLA**
7590061	T791B
7597209	T244B
7608770	T240B
7655487	T543B
7703382	T554B
7716094	T550B
7735397	T013B
7735397	T552C
Landrover	**TESLA**
ETC8619	T667B
STC8656	T667B
Lifan	**TESLA**
LF479Q1-3707000A	T333B
Mazda	**TESLA**
83M518140	T964B
8BBB18140	T963B
8BBR18140	T964B
8BBS18140	T964B
8BBY18140	T964B
8BBZ18140	T964B
8BG918140	T507B
8BGA18140	T899B
8BGA18140A	T899B
8BH418140	T760B
8BL318140	T296B
8BS318140A	T301B
B18124060	T963B
B31-R18-140	T300B
B33G18140A	T822B
B33G18140B	T822B
B61P-18-140C,B	T555B
B69F-18-140A	T556B
B69F-18-140B	T556B
B69F18140C	T302B
B6BF-18-140A,B	T556B
B6MC-18-140	T555B
BPE8-18-140,A	T555B
F267-19-140B	T301B
F85489182A	T485B
FE8518140B	T431B
FP1318140	T760B

Mazda	TESLA
FP1318140A	T760B
FP39-18-140	T245B
FP39-18-140A	T245B
FP85-18-140A	T248P
FP86-18-140A	T248P
FS0118140	T760B
FSD7-18-140B	T181B
KF3318140B	T873B
KF3318140C	T873B
KF3318140E	T873B
KL0118140C	T873B
L813-18-140B	T297B
L813-18-140C	T297B
Z50118140A	T980B
ZE0818140	T480B
ZE1118140	T963B
ZE2318140	T898B
ZE2518140	T871B
ZE2518140B	T871B
ZE2818140	T872B
ZE3118140	T873B
ZE9818140	T481B
ZL01-18-140A	T247P
ZX1518140	T507B
ZX1618140	T899B
ZX1818140	T964B
ZX1918140	T482B
ZX2918140	T760B
Mercedes	**TESLA**
021905409AB	T622C
1021502018	T069B
1021502018	T740C
1021502918	T069B
1021502918	T740C
1121500118	T808C
1121500218	T808C
1121500318	T072B
1121500318	T809C
1121500418	T072B
1121500418	T809C
1161500118	T087B
1161500118	T931C
1161501219	T001B
1161501219	T932C
1161501319	T001B
1161501319	T932C
A1121500118	T808C
A1121500218	T808C
Q4150034	T623C
Mini	**TESLA**
82110393996	T116B
82110404488	T116B
Mitsubishi	**TESLA**
AW-335647	T532B
MD023742	T254B
MD080566	T974B
MD134754	T902B
MD139318	T487B
MD139319	T487B
MD139424	T487B

Mitsubishi	TESLA
MD156560	T531B
MD173402	T536B
MD176915	T902B
MD180257	T504B
MD183124	T502B
MD192995	T902B
MD192995	T903B
MD193015	T502B
MD193980	T504B
MD195228	T903B
MD198216	T502B
MD310297	T502B
MD311208	T537P
MD317039	T503B
MD331260	T504B
MD332110	T253B
MD332343	T901B
MD334021	T502B
MD334026	T502B
MD334031	T503B
MD334039	T502B
MD334041	T505B
MD334043	T533P
MD336862	T533P
MD-338249	T632P
MD338624	T533P
MD-343245	T295P
MD346850	T531B
MD362276	T251B
MD365102	T539P
MD-371794	T632P
MD-371980	T632P
MD973163	T538B
MD975309	T538B
MD976524	T535B
MD997313	T250B
MD997315	T250B
MD997423	T250B
MD997424	T250B
MD997506	T535B
NGK	**TESLA**
0345	T180B
0346	T251B
0348	T443B
0349	T999B
0350	T933B
0351	T352B
0352	T248P
0354	T181B
0355	T844B
0501	T818C
0502	T702C
0504	T869C
0505	T591C
0506	T589C
0508	T941C
0509	T700C
0509	T703C
0511	T675C
0512	T208B

NGK	TESLA
0515	T952C
0518	T887C
0519	T593C
0523	T812C
0530	T204B
0542	T364B
0543	T663B
0548	T782C
0551	T781C
0565	T176C
0567	T173C
0569	T114C
0574	T174C
0574	T175C
0575	T437B
0576	T717C
0579	T810C
0579	T811C
0591	T218B
0592	T817B
0598	T789G
0603	T460G
0604	T225G
0604	T462G
0625	T152G
0631	T193G
0631	T226G
0632	T744G
0639	T164G
0640	T143G
0641	T227G
0642	T773G
0643	T757C
0643	T897B
0644	T177C
0663	T554B
0678	T456B
0682	T128B
0682	T445B
0682	T455B
0701	T976B
0706	T120B
0709	T868B
0710	T837B
0713	T799B
0714	T796B
0715	T795B
0736	T623C
0736	T624C
0738	T626C
0738	T805C
0741	T742C
0746	T741C
0748	T807C
0751	T931C
0752	T391C
0757	T743C
0757	T982C
0758	T808C
0759	T122H

NGK	TESLA
0768	T880C
0769	T881C
0772	T283B
0778	T168B
0778	T763B
0781	T179B
0782	T163B
0783	T284B
0784	T280B
0788	T271B
0788	T274B
0789	T269B
0789	T288B
0791	T279B
0796	T166B
0796	T882B
0797	T268B
0797	T764B
0800	T929B
0802	T286B
0804	T996B
0808	T928C
0812	T870B
0817	T144B
0820	T951C
0823	T277B
0825	T162B
0825	T287B
0829	T769B
0833	T766B
0835	T770B
0835	T780C
0836	T292C
0885	T366B
0887	T562B
0888	T561B
0888	T571B
0889	T563B
0898	T779C
0905	T109B
0907	T912B
0932	T823C
0934	T674C
0940	T662C
0941	T646C
0941	T649C
0941	T701C
0941	T820C
0945	T601C
0945	T714C
0949	T732B
0954	T801C
0954	T918C
0956	T843C
0958	T104C
0961	T942C
0963	T842C
0965	T101C
0966	T153C
0967	T559C

NGK	TESLA
0970	T103C
0970	T922C
0973	T241B
0986	T762B
1644	T549G
2115	T617B
2348	T594C
2476	T116B
2507	T583B
2553	T505B
2555	T253B
2564	T380B
2566	T716C
2570	T902B
2571	T845B
2578	T959B
2582	T281B
2584	T995G
2585	T331B
2587	T303B
2706	T967B
2899	T587P
2902	T396P
2908	T182P
2993	T858B
2995	T998B
2996	T710B
2996	T736B
2996	T737B
2997	T242B
3067	T512B
3075	T398P
4052	T358S
4052	T712S
4053	T921B
4053	T930B
4053	T949B
4058	T107B
4061	T950C
4062	T223G
4066	T508B
4069	T282B
4069	T629B
4069	T862B
4071	T740C
4077	T527B
4104	T295P
4104	T533P
4944	T774S
5048	T985B
5355	T926P
5361	T927P
5383	T616P
5384	T123P
5400	T547B
5402	T756G
5403	T467G
5404	T195H
5405	T471G
5408	T328B

NGK	TESLA
5408	T423B
5607	T828B
5762	T538B
5764	T574B
5896	T260B
5896	T261B
5917	T254B
5934	T537P
6019	T867S
6020	T888B
6022	T711B
6022	T923B
6045	T671B
6206	T308B
6209	T236B
6257	T765B
6258	T553B
6296	T833B
6299	T747B
6302	T117B
6307	T289C
6307	T778C
6309	T349C
6317	T465G
6348	T237B
6349	T739C
6797	T387C
6984	T297B
6984	T965G
7013	T102C
7013	T659C
7034	T856C
7044	T854C
7044	T855C
7065	T622C
7068	T356S
7079	T138B
7104	T355S
7108	T900B
7111	T216B
7116	T381B
7154	T706B
7156	T435B
7170	T318B
7171	T830B
7172	T196B
7175	T708B
7183	T160B
7190	T669B
7190	T840B
7201	T425B
7203	T222B
7205	T220B
7208	T791B
7209	T997B
7218	T600B
7244	T446B
7248	T110B
7285	T815B
7294	T827B

NGK	TESLA
7302	T578C
7302	T857C
7306	T874C
7307	T876C
7312	T211C
7313	T642C
7313	T819C
7313	T865C
7318	T800C
7358	T165C
7367	T441B
7368	T321B
7371	T728B
7374	T291B
7375	T668B
7376	T290B
7377	T721B
7379	T908B
7384	T363B
7389	T215B
7406	T124G
7406	T130G
7408	T365C
7701	T548G
7705	T565B
7708	T664B
7709	T590C
7709	T592C
8047	T325B
8047	T970B
8068	T644B
8183	T709B
8184	T159B
8185	T767B
8187	T373B
8187	T374B
8190	T936B
8192	T722B
8195	T597B
8200	T105B
8200	T934B
8205	T785B
8211	T645B
8218	T458B
8220	T550B
8230	T206C
8230	T878B
8240	T846B
8253	T577B
8266	T569B
8269	T560B
8270	T567B
8275	T738B
8279	T667B
8284	T191B
8286	T813B
8287	T139B
8288	T202B
8294	T432B
8299	T442B

NGK > TESLA ▶

NGK	TESLA
8300	T524B
8312	T735B
8456	T913B
8467	T598B
8468	T916B
8469	T607B
8469	T915B
8470	T707B
8470	T786B
8471	T497B
8472	T609B
8472	T705B
8474	T847B
8480	T498B
8485	T496B
8487	T606B
8487	T647B
8492	T917B
8493	T670B
8495	T905B
8496	T895B
8496	T895B
8499	T572B
8500	T914B
8503	T784B
8505	T311B
8507	T320B
8507	T792B
8510	T217B
8517	T557B
8523	T129B
8524	T132B
8528	T829B
8529	T240B
8529	T723B
8541	T500G
8541	T726G
8541	T972G
8556	T228G
8568	T146G
8569	T459G
8569	T470G
8571	T501G
8573	T570B
8575	T457C
8575	T595C
8597	T100C
8597	T599C
8612	T323B
8617	T389C
8618	T920C
8620	T824C
8621	T633C
8627	T877C
8647	T247P
8655	T230B
8735	T502B
8735	T503B
8741	T903B
8752	T504B

NGK	TESLA
8752	T531B
8839	T245B
8840	T378B
8921	T444B
9057	T835B
9072	T612B
9105	T229B
9150	T640P
9166	T850B
9170	T112B
9171	T518B
9171	T924B
9296	T252B
9302	T250B
9302	T974B
9405	T506B
9405	T848B
9459	T849B
9478	T386B
9609	T521B
9616	T400P
9616	T968P
9617	T522P
9618	T983P
9692	T636B
9846	T963B
9856	T555B
9857	T300B
9857	T822B
9859	T871B
9874	T872B
9890	T873B
9895	T302B
9898	T980B
9916	T507B
9920	T964B
9925	T760B
9925	T776B
9985	T385B
Nissan	**TESLA**
22440-1C710	T351B
22440-1S700	T575B
22440-2F200	T506B
22440-2J210	T506B
22440-57Y10	T848B
22440-70J25	T999B
22440-73C10	T848B
22440-89J25	T999B
22440-8B000	T575B
22440-99B00	T385B
22440-99B05	T385B
22450-0C827	T352B
22450-1C725	T351B
22450-03A25	T489B
22450-03A25	T491B
22450-05A85	T492B
22450-12G25	T121B
22450-16B27	T260B
22450-19B27	T260B
22450-22F25	T261B

Nissan	TESLA
22450-36A25	T266B
22450-36A25	T489B
22450-36A25	T491B
22450-37J25	T574B
22450-44R26	T557B
22450-65E25	T530B
22450-65E25	T946B
22450-69A25	T489B
22450-69A25	T491B
22450-70J26	T999B
22450-71J26	T849B
22450-74Y26	T849B
22450-84A25	T386B
22450-88G25	T264B
22450-89J26	T999B
22450-98E25	T265B
22450-G1625	T492B
Opel (Vauxhall)	**TESLA**
1-0-1612-648	T281B
1282095	T286B
1282137	T780C
1282137	T988B
1282138	T780C
1282138	T988B
1282139	T780C
1282139	T988B
1282140	T780C
1282140	T988B
1282142	T770B
1282143	T770B
1282144	T770B
1282145	T770B
1282146	T928C
1282146	T991B
1282147	T991B
1612400	T275B
1612429	T275B
1612434	T762B
1612436	T275B
1612447	T283B
1612458	T763B
1612459	T162B
1612459	T168B
1612462	T764B
1612472	T267B
1612473	T166B
1612473	T268B
1612474	T179B
1612476	T769B
1612477	T267B
1612479	T162B
1612479E	T287B
1612483	T768B
1612484	T273B
1612492	T279B
1612493	T278B
1612497	T163B
1612499	T271B
1612500	T271B
1612503	T882B

Opel (Vauxhall)	TESLA
1612505	T011B
1612505	T881C
1612506	T012B
1612506	T880C
1612507	T011B
1612507	T881C
1612508	T284B
1612510	T288B
1612513E	T144B
1612522	T093B
1612522	T292C
1612524	T162B
1612525	T280B
1612528	T766B
1612530	T274B
1612531	T163B
1612533	T269B
1612534	T288B
1612537	T271B
1612539	T162B
1612541	T269B
1612541	T962B
1612542	T162B
1612543	T766B
1612544	T269B
1612544	T962B
1612546	T288B
1612551	T274B
1612556	T269B
1612556	T962B
1612557	T269B
1612558	T929B
1612560	T322B
1612561	T096B
1612561	T289C
1612561	T778C
1612561	T987B
1612585	T093B
1612585	T292C
1612591	T883B
1612591	T996B
1612592	T996B
1612598	T777C
1612598	T986B
1612602	T951C
1612602	T993B
1612603	T950C
1612603	T992B
1612605	T951C
1612605	T993B
1612606	T765B
1612607	T765B
1612608	T629B
1612609	T277B
1612610	T269B
1612610	T962B
1612611	T870B
1612612	T558B
1612619	T950C
1612619	T992B

Opel (Vauxhall)	TESLA
1612622	T951C
1612622	T993B
1612623	T951C
1612623	T993B
1612639	T765B
1612657	T282B
1612658	T862B
4300014	T294B
4301718	T285B
90008240	T763B
90008241	T168B
90113025	T275B
90113411	T762B
90116687	T283B
90295494	T179B
90297423	T267B
90350542	T278B
90350555	T163B
90350559	T144B
90350564	T284B
90392649	T280B
90442064	T163B
90442404	T766B
90442406	T269B
90443943	T286B
90487571	T777C
90487571	T986B
90510854	T870B
90510855	T558B
90510857	T765B
90510858	T765B
90580760	T928C
90580760	T991B
90580761	T928C
90580761	T991B
93176702	T862B
Peugeot	**TESLA**
5967.84	T291B
5967.A6	T290B
5967.C3	T494B
5967.E5	T496B
5967.H5	T496B
5967.J7	T291B
5967.J7	T906B
5967.K0	T290B
5967.K4	T496B
5967.K6	T728B
5967.K7	T494B
5967.K9	T905B
5967.L0	T497B
5967.L1	T598B
5967.L3	T498B
5967.L6	T498B
5967.L7	T497B
5967.L8	T498B
5967.N1	T498B
5967.N2	T013B
5967.N2	T552C
5967.N6	T815B
5967.N7	T497B

Peugeot	TESLA
5967.P1	T815B
7700646235	T671B
9153775680	T728B
Porsche	**TESLA**
94460900502	T349C
94460901701	T349C
PSA	**TESLA**
5967.H4	T216B
96061817	T216B
96066677	T216B
Renault	**TESLA**
19901-87787-000	T311B
3342846-7	T858B
7700100447	T541B
7700102225	T159B
7700106221	T960B
7700107662	T767B
7700114549	T319B
7700260501	T706B
7700273226	T949B
7700273826	T841B
7700273826	T921B
7700590752	T303B
7700720781	T707B
7700720781	T786B
7700720783	T707B
7700720783	T786B
7700732842	T304B
7700733764	T318B
7700733764	T577B
7700741872	T787B
7700741872	T792B
7700742835	T321B
7700742837	T900B
7700746401	T705B
7700749826	T705B
7700847109	T767B
7700850451	T669B
7700850462	T707B
7700851994	T669B
7700853260	T217B
7700854824	T909B
7700855766	T320B
7700855768	T320B
7700856896	T160B
7700857980	T670B
7700859065	T159B
7700866923	T708B
7700873186	T320B
7700874564	T709B
7701025484	T668B
8200122243	T316B
8200334440	T383B
8200506297	T921B
8200575895	T317B
8200713680	T495B
Rover	**TESLA**
GHT191	T663B
GHT212	T364B
GHT233	T363B

Rover	TESLA
GHT241	T663B
GHT246	T364B
GHT250	T363B
GHT252	T571B
GHT254	T572B
GHT258	T363B
GHT259	T560B
GHT260	T561B
GHT264	T562B
GHT265	T666B
GHT270	T665B
GHT271	T666B
GHT273	T570B
GHT274	T895B
GHT278	T664B
GHT282	T665B
GHT283	T569B
GHT284	T564B
GHT285	T568B
GHT287	T563B
GHT288	T567B
GHT289	T366B
GHT290	T570B
GHT299	T365C
NGC000020	T365C
NGC000040	T565B
NGC000060	T563B
NGC000080	T569B
NGC000090	T564B
NGC104250	T365C
Saab	**TESLA**
8817314	T935B
8817314	T936B
8817520	T938B
8821951	T779C
8821951	T989B
9321910	T105B
9337346	T373B
9337346	T374B
9337346	T934B
Seat	**TESLA**
2108-37070-80,	T912B
2108-37071-50	T912B
4450667	T109B
SE022028301A	T908B
SE028028301C	T600B
Sentech	**TESLA**
8000	T909B
8001	T669B
8002	T320B
8003	T160B
8005	T670B
8006	T767B
8006	T960B
8008	T159B
8013	T858B
8013	T914B
8014	T311B
8014	T609B
8014	T705B

Sentech	TESLA
8015	T304B
8015	T908B
8016	T321B
8017	T708B
8018	T949B
8020	T792B
8021	T900B
8023	T706B
8036	T435B
8040	T381B
8042	T906B
8045	T218B
8046	T724B
8047	T728B
8049	T492B
8050	T458B
8052	T303B
8053	T671B
8055	T290B
8056	T721B
8056	T827B
8058	T246B
8058	T485B
8058	T530B
8058	T575B
8058	T615B
8058	T946B
8061	T499B
8062	T912B
8063	T255B
8063	T326B
8063	T479B
8072	T109B
8072	T344H
8072	T346H
8073	T229B
8074	T124G
8075	T261B
8075	T262B
8075	T480B
8075	T488B
8075	T489B
8075	T491B
8077	T425B
8078	T835B
8079	T645B
8080	T129B
8081	T378B
8081	T380B
8093	T619B
8094	T620B
8095	T269B
8095	T288B
8095	T870B
8099	T611B
8099	T612B
8102	T266B
8102	T328B
8102	T374B
8103	T327B

Sentech	TESLA
8104	T466G
8104	T469G
8105	T287B
8106	T166B
8106	T179B
8106	T268B
8106	T762B
8106	T764B
8107	T590C
8107	T591C
8107	T592C
8112	T789G
8113	T227G
8114	T410G
8115	T744G
8117	T286B
8117	T766B
8121	T011B
8121	T282B
8121	T881C
8122	T012B
8122	T880C
8123	T551B
8123	T722B
8124	T830B
8126	T542B
8127	T757C
8127	T897B
8128	T096B
8128	T289C
8128	T778C
8128	T928C
8128	T987B
8128	T991B
8129	T279B
8132	T760B
8132	T776B
8133	T545B
8133	T845B
8141	T164G
8142	T554B
8143	T726G
8144	T208B
8146	T093B
8146	T292C
8147	T494B
8148	T496B
8148	T905B
8149	T598B
8150	T215B
8152	T817B
8155	T497B
8156	T498B
8156	T600B
8157	T815B
8160	T606B
8160	T647B
8162	T196B
8163	T707B
8163	T786B

Sentech	TESLA
8163	T787B
8164	T777C
8164	T986B
8165	T950C
8165	T951C
8165	T992B
8165	T993B
8166	T895B
8167	T847B
8168	T847B
8169	T847B
8170	T878B
8171	T427B
8172	T015B
8172	T877C
8173	T596B
8173	T597B
8174	T025B
8174	T812C
8176	T425B
8177	T532B
8177	T535B
8179	T924B
8181	T199B
8182	T608B
8183	T915B
8185	T917B
8186	T607B
8187	T916B
8188	T916B
8189	T779C
8189	T989B
8190	T935B
8191	T373B
8192	T934B
8193	T936B
8197	T506B
8197	T848B
8197	T999B
8198	T849B
8201	T026B
8201	T824C
8202	T205B
8218	T133B
8218	T148B
8223	T152G
8223	T224G
8223	T460G
8224	T125G
8224	T141G
8225	T799B
8225	T837B
8227	T120B
8231	T252B
8231	T254B
8231	T487B
8233	T280B
8234	T324B
8236	T149B
8237	T149B

Sentech > TESLA ▶

Sentech	TESLA
8239	T964B
8244	T302B
8244	T556B
8245	T871B
8245	T872B
8245	T873B
8259	T769B
8261	T504B
8261	T531B
8263	T503B
8264	T505B
8266	T265B
8267	T264B
8270	T149B
8274	T540B
8277	T636B
8281	T983P
8282	T522P
8283	T397P
8286	T149B
8292	T984P
8297	T846B
8299	T570B
8299	T572B
8301	T970B
8304	T561B
8304	T571B
8307	T223G
8308	T140G
8309	T135H
8309	T356S
8309	T413M
8310	T146G
8310	T285B
8310	T459G
8310	T462G
8310	T464G
8310	T470G
8311	T463G
8319	T260B
8320	T574B
8320	T948B
8321	T163B
8323	T560B
8323	T562B
8324	T250B
8324	T901B
8327	T502B
8327	T538B
8328	T580B
8329	T323B
8329	T851B
8331	T163B
8331	T271B
8331	T274B
8334	T732B
8339	T732B
8340	T458B
8344	T220B
8349	T222B

Sentech	TESLA
8349	T239B
8350	T132B
8351	T445B
8353	T241B
8355	T723B
8356	T543B
8359	T723B
8363	T240B
8366	T129B
8367	T244B
8371	T829B
8373	T013B
8373	T552C
8374	T550B
8379	T645B
8385	T128B
8386	T829B
8388	T763B
8391	T521B
8394	T795B
8396	T599C
8397	T471G
8399	T902B
8401	T709B
8402	T921B
8402	T930B
8402	T949B
8403	T524B
8403	T747B
8404	T281B
8405	T192B
8407	T501G
8408	T549G
8409	T548G
8410	T111B
8410	T112B
8410	T814B
8412	T868B
8417	T765B
8418	T280B
8420	T500G
8420	T964B
8421	T773G
8422	T894G
8426	T670B
8426	T840B
8429	T782C
8430	T114C
8433	T386B
8435	T013B
8435	T552C
8437	T554B
8439	T997B
8440	T998B
8441	T644B
8441	T735B
8442	T523B
8445	T544B
8445	T828B
8446	T913B

Sentech	TESLA
8446	T975B
8447	T981B
8448	T929B
8449	T558B
8449	T862B
8450	T962B
8453	T796B
8458	T589C
8459	T980B
8460	T629B
8461	T770B
8468	T559C
8469	T444B
8470	T933B
8474	T325B
8477	T385B
8478	T849B
8481	T966B
8482	T520B
8483	T521B
8484	T822B
8484	T898B
8485	T482B
8486	T507B
8486	T509B
8487	T899B
8488	T181B
8489	T895B
8491	T230B
8492	T985B
8493	T532B
8493	T535B
8493	T813B
8495	T903B
8496	T443B
8497	T423B
8497	T844B
8498	T602B
8499	T644B
8500	T927P
8501	T616P
8502	T746P
8502	T926P
8503	T123P
8504	T927P
8505	T983P
8508	T533P
8509	T539P
8512	T585B
8512	T735B
8513	T850B
8514	T569B
8514	T959B
8515	T527B
8517	T443B
8520	T111B
8521	T888B
8523	T508B
8526	T457C
8526	T595C

Sentech	TESLA
8529	T790G
8533	T962B
8535	T277B
8539	T780C
8539	T988B
8540	T083B
8540	T101C
8541	T044B
8541	T649C
8542	T081B
8542	T102C
8542	T153C
8548	T072B
8548	T809C
8550	T100C
8556	T228G
8588	T631B
9001	T064B
9001	T065B
9001	T066B
9001	T067B
9001	T800C
9001	T802C
9001	T843C
9001	T942C
9002	T038B
9002	T051B
9002	T701C
9002	T703C
9003	T035B
9003	T040B
9003	T650C
9003	T821C
9004	T050B
9004	T094B
9004	T675C
9004	T700C
9006	T028B
9006	T176C
9006	T907C
9007	T023B
9007	T717C
9008	T029B
9008	T031B
9008	T033B
9008	T174C
9008	T175C
9008	T718C
9008	T886C
9008	T940C
9011	T086B
9011	T657C
9013	T742C
9015	T590C
9015	T591C
9015	T592C
9016	T020B
9016	T941C
9017	T050B
9017	T700C

Sentech	TESLA
9018	T016B
9018	T017B
9018	T601C
9018	T714C
9019	T089B
9019	T103C
9022	T028B
9022	T176C
9022	T907C
9023	T023B
9023	T717C
9024	T027B
9024	T173C
9024	T715C
9025	T073B
9025	T869C
9026	T059B
9026	T077B
9026	T078B
9026	T674C
9026	T855C
9026	T856C
9028	T023B
9028	T717C
9029	T208B
9030	T057B
9030	T920C
9031	T425B
9033	T014B
9033	T876C
9034	T060B
9034	T061B
9034	T062B
9034	T063B
9034	T801C
9034	T803C
9034	T823C
9034	T918C
9036	T069B
9036	T740C
9045	T070B
9045	T741C
9047	T039B
9047	T702C
9050	T732B
9051	T043B
9051	T646C
9052	T043B
9052	T045B
9052	T646C
9052	T654C
9053	T035B
9053	T036B
9053	T650C
9053	T651C
9054	T041B
9054	T044B
9054	T047B
9054	T054B
9054	T055B

Sentech	TESLA
9054	T633C
9054	T649C
9054	T656C
9054	T820C
9054	T865C
9055	T732B
9056	T009B
9056	T626C
9056	T805C
9057	T797B
9059	T599C
9060	T047B
9060	T656C
9061	T008B
9061	T807C
9062	T079B
9062	T857C
9063	T048B
9063	T053B
9063	T658C
9063	T819C
9064	T004B
9064	T874C
9065	T782C
9066	T114C
9067	T623C
9068	T032B
9068	T075B
9068	T080B
9068	T781C
9068	T810C
9068	T811C
9069	T071B
9069	T808C
9070	T006B
9070	T842C
9071	T002B
9071	T818C
9072	T088B
9072	T594C
9074	T010B
9074	T982C
9075	T045B
9075	T654C
9076	T068B
9076	T084B
9076	T104C
9076	T952C
9078	T589C
9079	T003B
9079	T887C
9080	T007B
9080	T806C
9081	T076B
9081	T854C
9082	T002B
9082	T818C
9083	T074B
9083	T079B
9083	T578C

Sentech	TESLA
9083	T857C
9084	T559C
S1	T338B
S1222	T784B
S1223	T785B
S1239	T829B
S1240	T645B
S1245	T129B
S1250	T338B
S1253	T722B
S1308	T146G
S1308	T225G
S1309	T474G
S1309	T476G
S14	T339B
S2	T336B
S200	T369S
S202	T122H
S202	T368S
S203	T194H
S203	T194S
S203	T195H
S203	T372S
S205	T059B
S205	T674C
S21	T833B
S210	T625S
S212	T694S
S2311	T147B
S2311	T162B
S2311	T168B
S2311	T267B
S2351	T163B
S2352	T179B
S25	T832B
S27	T834B
S300	T134H
S300	T355S
S300	T412M
S301	T340H
S301	T359S
S301	T416M
S302	T135H
S302	T356S
S302	T413M
S303	T418S
S303	T419H
S303	T420M
S304	T135H
S304	T356S
S304	T413M
S306	T395S
S306	T514M
S306	T684H
S307	T394S
S307	T513M
S309	T137H
S309	T367S
S310	T137H
S310	T367S

Sentech	TESLA
S312	T342H
S312	T358S
S312	T415M
S315	T342H
S315	T358S
S315	T415M
S316	T395S
S316	T514M
S316	T684H
S317	T342H
S317	T358S
S317	T415M
S318	T403H
S318	T627S
S318	T704M
S320	T516M
S320	T774S
S321	T696H
S321	T712S
S321	T713M
S322	T517M
S322	T771H
S322	T867S
S323	T340H
S323	T359S
S323	T416M
S324	T136H
S324	T357S
S324	T414M
S360	T348H
S40	T441B
S403	T132B
S403	T231B
S403	T291B
S403	T456B
S404	T244B
S405	T275B
S405	T283B
S405	T318B
S41	T440B
S41	T736B
S42	T698B
S42	T737B
S43	T710B
S44	T553B
S44	T711B
S45	T699B
S45	T738B
S6EL	T455B
S6EL	T668B
S6ST	T668B
S8	T424S
Skoda	**TESLA**
007901591	T194H
007901591	T194S
007901726S	T195H
007901726S	T372S
113093592	T409H
113093592	T369S
115093592	T122H

Skoda	TESLA
115093592	T368S
115093593	T145H
115093593	T371S
Smart	**TESLA**
002576V002	T092B
002576V002	T170C
002576v002000000	T092B
002576v002000000	T170C
Subaru	**TESLA**
22450-453KA002	T851B
22451-AA120	T583B
22451-AA270	T913B
22451-AA341	T981B
22451-AA351	T981B
22451-AA371	T981B
22451-AA420	T913B
22451-AA630	T975B
22451-AA640	T975B
22451-AA720	T310B
22451-AA720	T581B
22451-AA730	T310B
22451-AA730	T581B
22451-AA800	T310B
22451-AA800	T581B
22451-AA810	T310B
22451-AA810	T581B
SOA430Q112	T324B
SOA430Q112	T407B
SOA430Q114	T323B
Suzuki	**TESLA**
33700-82011	T970B
33700-84100	T325B
33705-51G10	T327B
33705-51G10	T844B
33705-57B20	T644B
33705-57B21	T585B
33705-60B10	T325B
33705-60G20	T585B
33705-64B10	T423B
33705-64B10	T957B
33705-66D00	T967B
33705-71C20	T735B
33705-75F02	T512B
33705-75F03	T512B
33705-80040	T326B
33705-80x51	T328B
33705-80x51	T844B
33705-83020	T602B
33705-85220	T456B
33706-83x50	T844B
33706-83x50	T328B
Toyota	**TESLA**
19037-62010	T587P
19037-75010	T588P
90080-91127	T518B
90191-21494	T638B
90919-21327	T615B
90919-21395	T149B
90919-21400	T540B
90919-21417	T520B

Toyota	TESLA
90919-21431	T637B
90919-21468	T540B
90919-21473	T182P
90919-21489	T123P
90919-21521	T639P
90919-21524	T402P
90919-21528	T640P
90919-21552	T614P
90919-21557	T396P
90919-21563	T639P
90919-21569	T614P
90919-21575	T614P
90919-21576	T984P
90919-21577	T182P
90919-21585	T984P
90919-21597	T639P
90919-21598	T984P
90919-21607	T522P
90919-22105	T611B
90919-22147	T611B
90919-22176	T636B
90919-22209	T966B
90919-22210	T966B
90919-22211	T521B
90919-22243	T636B
90919-22262	T398P
90919-22262	T399P
90919-22273	T617B
90919-22284	T521B
90919-22285	T521B
90919-22302	T983P
90919-22319	T983P
90919-22325	T400P
90919-22325	T968P
90919-22327	T746P
90919-22329	T616P
90919-22358	T618P
90919-22369	T983P
90919-22370	T983P
90919-22371	T618P
90919-22373	T401P
90919-22386	T927P
90919-22393	T613P
90919-22395	T926P
90919-22400	T927P
90998-99001	T924B
90998-99002	T924B
VAG	**TESLA**
03F905409A	T056B
03F905409A	T406C
03F905409B	T056B
03F905409B	T406C
077905441B	T589C
077905531A	T589C
077905532A	T589C
077905533A	T589C
077905534A	T589C
077905535A	T589C
077905537A	T589C

VAZ (LADA) > TESLA ▶

VAZ (LADA)	TESLA
1111-3707060	T403H
1111-3707060	T627S
1111-3707060	T704M
2101-3707080	T134H
2108-3707080-10	T135H
2111-3707080	T684H
2112-3707080	T774S
21214-3707080-10	T771H
21214-3707080-10	T867S
21214-3707080-20	T394S
21214-3707080-20	T513M
2123-3707080-10	T771H
2123-3707080-10	T867S

Volvo	TESLA
1274779-6	T199B
1275284	T917B
1275284-6	T917B
1275603	T382B
1367224	T608B
270525-9	T199B
270560-6	T381B
270749-5	T113B
270749-5	T607B
270800-6	T380B
270880	T608B
270880-8	T113B
270897-2	T607B
270898-0	T380B
271483	T915B
272193	T378B
272193-4	T380B
30731424	T500G
3203926	T378B
3208419-6	T196B
3287924-9	T606B
33428467	T914B
3342846-7	T858B
3344409-2	T606B
34333625	T914B
3436582-5	T609B
3531277-6	T607B
7431275284	T917B
9146403-2	T916B

VW	TESLA
021905409	T060B
021905409	T063B
021905409	T801C
021905409	T918C
021905409AA	T061B
021905409AA	T803C
021905409AD	T165C
021905409B	T060B
021905409B	T063B
021905409B	T801C
021905409B	T918C
021905409F	T062B
021905409F	T823C
021905409J	T062B
021905409J	T823C
021905409K	T061B

VW	TESLA
021905409K	T803C
021905409N	T062B
021905409N	T823C
021905409T	T062B
021905409T	T823C
025998031	T054B
025998031	T820C
030905409B	T079B
030905409B	T857C
030905409C	T074B
030905409C	T578C
032905041	T041B
032905041	T633C
032905430	T042B
032905430	T642C
032905430K	T098B
032905430K	T387C
032905430L	T098B
032905430L	T387C
032905430M	T098B
032905430M	T387C
032905430N	T098B
032905430N	T387C
034905483G	T020B
034905483G	T941C
035998031	T208B
036905409	T006B
036905409	T842C
036905483G	T004B
036905483G	T874C
037905409B	T089B
037905409B	T103C
037905409B	T601C
037905409B	T714C
037905409B	T922C
037905409D	T067B
037905409D	T942C
037905483C	T065B
037905483C	T066B
037905483C	T800C
037905483C	T802C
037905483C	T843C
053905431	T592C
053905433	T592C
053905481C	T591C
058905409A	T594C
06A905405N	T078B
06A905405N	T856C
06A905409A	T059B
06A905409A	T674C
06A905409D	T002B
06A905409D	T818C
06A905409E	T059B
06A905409E	T674C
06A905409F	T077B
06A905409F	T855C
06A905409G	T559C
06A905409H	T059B
06A905409H	T674C
06A905409P	T076B

VW	TESLA
06A905409P	T854C
06B905409E	T076B
06B905409E	T854C
071905409C	T083B
071905409C	T101C
071905409D	T102C
071905409E	T102C
071905409E	T153C
071905409F	T102C
071905409F	T153C
071905409G	T083B
071905409G	T101C
071905409H	T081B
071905409H	T153C
071905409H	T659C
071905409J	T083B
071905409J	T101C
078905113	T003B
078905113	T887C
078905401	T073B
078905401	T869C
321998031	T732B
321998031A	T732B
431998031A	T732B
437998031B	T050B
437998031B	T700C
803998031	T035B
803998031	T650C
N10052906	T089B
N10052906	T103C
N10052906	T601C
N10052906	T714C
N10052906	T922C
N10238301	T591C
N10238501	T590C

Ignition lead sets
Комплекты проводов зажигания
Sady zapalovacích kabelů
Set dei cavi d'accensione
Zündleitungssätze

TxxxB, TxxxC, TxxxG, TxxxP

W1/W2 casing - коробка - obal - imballo - Verpackung

W1: A = 116 mm, B = 63 mm, C = 295 mm
W2: A = 126 mm, B = 116 mm, C = 295 mm

30 (15) pcs of casings W1 (W2) in an M box
30 (15) шт. индивидуальных упаковок W1 (W2) в коробке M
30 (15) ks obalů W1 (W2) v kartonu M
N. 30 (15) imballi W1 (W2) nel cartone M
30 (15) St von Verpackungen W1 (W2) im M-Karton

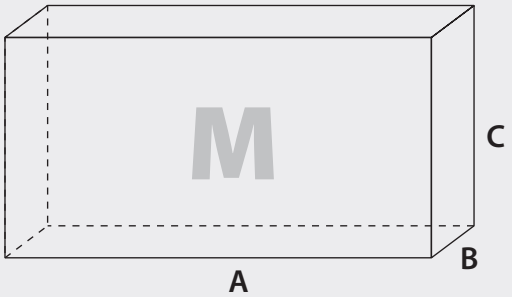

A = 600 mm, B = 400 mm, C = 300 mm

Ignition lead sets
Комплекты проводов зажигания
Sady zapalovacích kabelů
Set dei cavi d'accensione
Zündleitungssätze

TxxxH, TxxxS, TxxxM

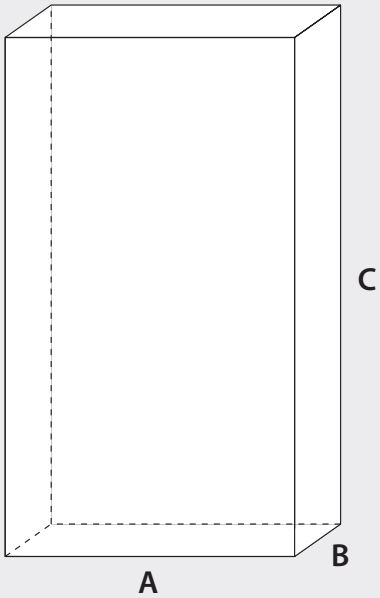

W3/W4 casing - коробка - obal - imballo - Verpackung

W3: A = 117 mm, B = 63 mm, C = 209 mm
W4: A = 117 mm, B = 75 mm, C = 209 mm

30 (25) pcs of casings W3 (W4) in an L box
30 (25) шт. индивидуальных упаковок W3 (W4) в коробке L
30 (25) ks obalů W3 (W4) v kartonu L
N. 30 (25) imballi nel cartone L
30 (25) St von Verpackungen im L-Karton

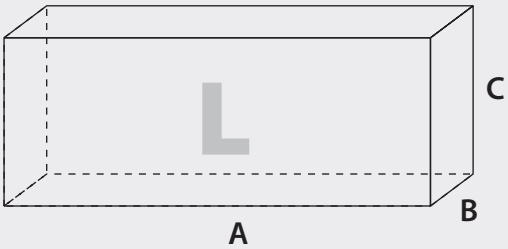

A = 600 mm, B = 400 mm, C = 210 mm

Sales stand
Стенд для продажи- презентационная стойка
Prodejní stojan
Cavaletto per la presentazione dei prodotti
Präsentationsständer

Presentation frame HL1
Presentation of TESLA products in your shops
Presentation of products on your own discretion
Various configuration of products
Innovated presentation hanging frame with 2 racks up to 12 ignition sets each

Dimensions: 60 x 90 cm
Assembly: 1 pc frame, 4 pcs hooklet, 2 pcs rack
Installation: screw mounting on the wall
Note: screws are not in delivery

Презентационный стенд HL1
Презентация продукции фирмы TESLA на месте продажи
Собственной выбор выставляемой продукции
Разные варианты выставляемых продуктов и упаковок
Две полки, каждая для размещения до 12 шт. упаковок с проводами зажигания

Размеры: 60 x 90 см
Комплект стенда: рама 1 шт. , европодвесы 4 шт., полки 2 шт.
Монтаж: крепление к стене при помощи шурупов
Примечание: шурупы и дюбели не входят в комплект поставки

Prezentační stojan HL1
Prezentace výrobků TESLA na prodejním místě
Vlastní výběr prezentovaných výrobků
Variabilnost sestav obalů s výrobky
Inovovaný promoční závěsný stojan-dvě police, každá pro umístění až 12 ks obalů se zapalovacími kabely

Rozměry: 60 x 90 cm
Sestava rámu: 1 ks rám, 4 ks eurozávěs, 2 ks police
Montáž: uchycení vruty na stěnu
Poznámka: vruty a hmoždinky nejsou součástí dodávky

Cavaletto per la presentazione dei prodotti HL1
Presentazione dei prodotti TESLA in punto di vendita
Scelta propria dei prodotti da presentare
Variabilità dei kit delle confezioni prodotti
Cavalletto sospeso di promozione a due ripiani, ogni per posizionarvi sino a 12 pz di confezioni di cavi accensione

Dimensioni: 60 x 90 cm
Kit telaio: n.1 telaio, n. 4 eurosospensioni, n. 2 ripiani
Montaggio: fissaggio sulla parete con tuffi avvitati
Nota: tuffi avvitati e tasselli non fanno parte della fornitura

Präsentationsständer HL1
Präsentation der Produkte TESLA auf der Verkaufsstelle
Eigene Auswahl der präsentierten Produkte
Variabilität der Anordnung der Verpackungen mit Produkten
Innovatives Promotionseinhängegestell - zwei Regale, jedes für die Aufstellung bis zu 12 St Verpackungen mit Zündkabeln

Abmessungen: 60 x 90 cm
Rahmenanordnung: 1 St Rahmen, 4 St Euroaufhänger, 2 St Regale
Montage: Schraubenbefestigung an der Wand
Bemerkung: Schrauben und Dübel gehören nicht zum Lieferumfang

- силиконовые провода зажигания
- новая конструкция проводов зажигания
- высокое качество изготовления
- безотказная работа
- высокая надежность
- широкий ассортимент
- качественная упаковка

SILICONE basic

1

- силиконовые провода зажигания с резистивным сердечником

- отличное соотношение цены и качества
- увеличенный диаметр проводящего ядра
- оптимальной перенос энергии к свече зажигания
- теплостойкость с -40 ... +220°C

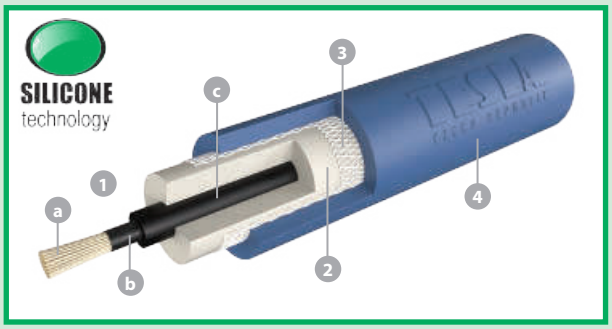

1 - полностью проводящий силиконовый сердечник: a - стекловолокна с углеродной пропиткой, **b -** проводящий слой латекса, **c -** проводящий силиконовый слой, **2 -** внутренняя изоляция, **3 -** оплётка, **4 -** внешняя силиконовая изоляционная оболочка

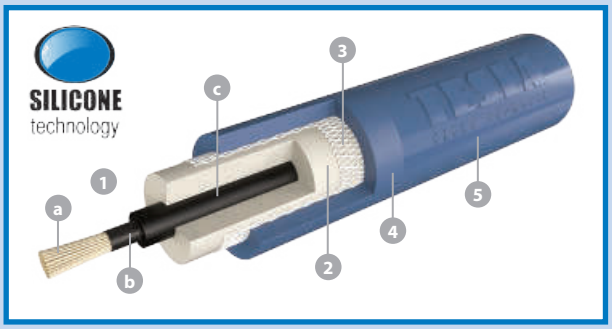

2

SILICONE premium

- силиконовые провода зажигания с резистивным сердечником

- уникальный защитный слой увеличивает срок эксплуатации провода
- увеличенный диаметр проводящего ядра
- оптимальной перенос энергии к свече зажигания
- теплостойкость с -50 ... +250°C

1 - полностью проводящий силиконовый сердечник: a - стекловолокна с углеродной пропиткой, **b -** проводящий слой латекса, **c -** проводящий силиконовый слой, **2 -** внутренняя изоляция, **3 -** оплётка, **4 -** внешняя силиконовая изоляционная оболочка, **5 -** прозрачный защитный слой

SILICONE inductive

3

- силиконовые провода зажигания с индуктивным сердечником

- низкое сопротивление токопроводящего сердечника
- максимальная передача энергии к свече зажигания
- увеличенная толщина провода 8 mm
- выдерживает более высокое напряжение 40 кВ
- теплостойкость с -50 ... +250°C
- рекомендуем для автомобилей с газовым оборудованием

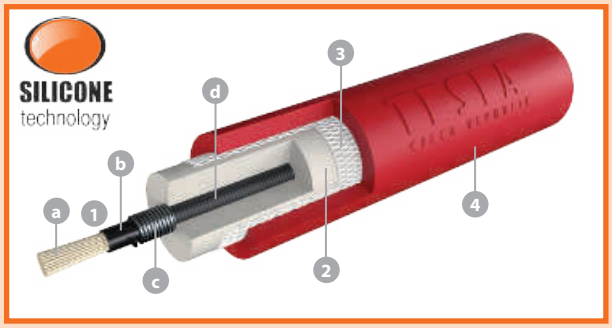

1 - индуктивный сердечник: a - кевларовые волокна, **b -** проводящий ферритосодержащий слой, **c -** стальная проволока, **d -** фиксирующее напыление, **2 -** внутренняя изоляция, **3 -** оплётка, **4 -** внешняя силиконовая изоляционная оболочка

ТАБЛИЦА ПРИМЕНЕНИЯ КОМПЛЕКТОВ ПРОВОДОВ ЗАЖИГАНИЯ TESLA

Комплекты проводов зажигания обозначены кодом и это обозначение служит одновременно как каталожный номер для заказа. Для заказа используйте полный каталожный номер и спецификацию модели автомобиля.

Например: T135H ВАЗ 2108-099 – 1 компл.
Для Вашего удобства в таблице представлены модели автомобилей российского производства и каталожный номер комплекта проводов зажигания по нумерации Tesla.

Тип проводов	SILICONE basic	SILICONE premium	SILICONE inductive
Диаметр провода	7 mm		8 mm
Пробивное напряжение	35 kV		40 kV
Сердечник	резистивный		индуктивный
Внешняя изоляция	SILICONE	SILICONE	SILICONE
Теплостойкость	-40…+220°C	-50…+250°C	-50…+250°C
Дополнительные характеристики		дополнительный изоляционный слой	пониженное сопротивление
Цвет провода	синий	синий	красный

Тип и № комплектов проводов зажигания TESLA

Автомобиль	Модель	Объем	Двигатель	Объем cm³ и мощность kW	SILICONE basic	SILICONE premium	SILICONE inductive
АЗЛК							
Москвич	АЗЛК 412	1.5	УЗАМ 412	1478/55	T634H	T635S	-
	2137	1.5	УЗАМ 412/331.10	1478/55	T634H	T635S	-
	2140	1.5	УЗАМ 412/331.10	1478/55	T634H	T635S	-
Алеко	АЗЛК 2141	1.5	УЗАМ 331.10	1478/55	T136H	T357S	T414M
	2141	1.6	ВАЗ 2106	1568/54,5	T340H	T359S	T416M
	2141	1.7	УЗАМ 331	1699/58	T136H	T357S	T414M
Святогор	АЗЛК 2141	1.6	ВАЗ 2106	1568/54,5	T340H	T359S	T416M
	214122	1.7	УЗАМ 3317	1700/58	T634H	T635S	-
	214123	1.8	УЗАМ 3318	1800/63	T136H	T357S	T414M
	214145	2.0i	F3R272	2000/77	T672H	T673S	-
Юрий Долгорукий	2141V3	1.8	ВАЗ 2130	1800/60	T340H	T359S	T416M
	2141Y2	1.7	УЗАМ 3317	1700/58	T634H	T635S	-
	2141Y3	1.8	УЗАМ 3318	1800/63	T136H	T357S	T414M
	2141R5	2.0i	F3R272	2000/77	T672H	T673S	-
Иван Калита	АЗЛК 2142	2.0i	F3R272	2000/77	T672H	T673S	-
Князь Владимир	2142-179	1.7	УЗАМ 3317	1700/58	T634H	T635S	-
	2142-164	2.0i	F3R272	2000/77	T672H	T673S	-
Пикап	АЗЛК 2335	1.6	ВАЗ 2106	1568/54,5	T340H	T359S	T416M
	233522	1.7	УЗАМ 331	1699/58	T136H	T357S	T414M
	233523	1.8	УЗАМ 3318	1800/63	T136H	T357S	T414M
	АЗЛК 2901	1.6	ВАЗ 2106	1568/54,5	T340H	T359S	T416M
	290122	1.7	УЗАМ 331	1699/58	T136H	T357S	T414M
	290123	1.8	УЗАМ 3318	1800/63	T136H	T357S	T414M
ВАЗ - ЛАДА							
Гранта	ВАЗ 2190	1.6i 8кл	ВАЗ 11183	1600/60	T684H	T395S	T514M
	2190	1.6i 8кл	ВАЗ 11186	1600/64	T684H	T395S	T514M
	2190	1.6i 8кл	ВАЗ 21116	1600/66	T684H	T395S	T514M
Гранта Лифтбек	ВАЗ 2191	1.6i 8кл	ВАЗ 11186	1600/64	T684H	T395S	T514M
	2191	1.6i 8кл	ВАЗ 21116	1600/66	T684H	T395S	T514M
Жигули	ВАЗ 2101	1.2	ВАЗ 2101	1200/43	T134H	T355S	T412M

Тип и № комплектов проводов зажигания TESLA

Автомобиль	Модель	Объем	Двигатель	Объем cm³ и мощность kW	SILICONE basic	SILICONE premium	SILICONE inductive
ВАЗ - ЛАДА							
Жигули	21011	1.3	ВАЗ 21011	1300/47	T134H	T355S	T412M
	21013	1.2	ВАЗ 2101	1200/43	T134H	T355S	T412M
Жигули	ВАЗ 2102	1.2	ВАЗ 2101	1200/43	T134H	T355S	T412M
	21021	1.3	ВАЗ 21011	1300/47	T134H	T355S	T412M
	21023	1.5	ВАЗ 2103	1500/52	T134H	T355S	T412M
Жигули	ВАЗ 2103	1.5	ВАЗ 2103	1500/52	T134H	T355S	T412M
	21033	1.3	ВАЗ 21011	1300/47	T134H	T355S	T412M
	21035	1.2	ВАЗ 2101	1200/43	T134H	T355S	T412M
Калина	ВАЗ 1117	1.6i 8кл	ВАЗ 11183	1600/58	T684H	T395S	T514M
	1117	1.6i 8кл	ВАЗ 21114	1600/60	T684H	T395S	T514M
	1118	1.6i 8кл	ВАЗ 11183	1600/58	T684H	T395S	T514M
	1118	1.6i 8кл	ВАЗ 21114	1600/60	T684H	T395S	T514M
	1119	1.6i 8кл	ВАЗ 11183	1600/58	T684H	T395S	T514M
	1119	1.6i 8кл	ВАЗ 21114	1600/60	T684H	T395S	T514M
Калина 2	ВАЗ 2192	1.6i 8кл	ВАЗ 1186	1600/64	T684H	T395S	T514M
	2192	1.6i 8кл	ВАЗ 11183-50	1600/58	T684H	T395S	T514M
	2194	1.6i 8кл	ВАЗ 1186	1600/64	T684H	T395S	T514M
Калина Кросс		1.6i 8кл	ВАЗ 1186	1600/64	T684H	T395S	T514M
Лада 2104	ВАЗ 2104	1.3	ВАЗ 2105	1300/47	T134H	T355S	T412M
	21041	1.2	ВАЗ 2101	1200/43	T134H	T355S	T412M
	21043	1.5	ВАЗ 2103	1500/51	T134H	T355S	T412M
	21044	1.7i 8кл	ВАЗ 21073	1700/59	T771H	T867S	T517M
	21047	1.5	ВАЗ 2103	1500/51	T134H	T355S	T412M
Лада 2105	ВАЗ 2105	1.3	ВАЗ 2105	1300/47	T134H	T355S	T412M
	21051	1.2	ВАЗ 2101	1200/43	T134H	T355S	T412M
	21053	1.5	ВАЗ 2103	1500/51	T134H	T355S	T412M
Лада 2106	ВАЗ 2106	1.6	ВАЗ 2106	1600/56	T134H	T355S	T412M
	21061	1.5	ВАЗ 2103	1500/51	T134H	T355S	T412M
	21063	1.3	ВАЗ 21011	1300/47	T134H	T355S	T412M
Лада 2107	ВАЗ 2107	1.5	ВАЗ 2103	1500/51	T134H	T355S	T412M
	21072	1.3	ВАЗ 2105	1300/47	T134H	T355S	T412M
	21073	1.7i 8кл	ВАЗ 21073	1700/59	T771H	T867S	T517M
	21074	1.6	ВАЗ 2106	1600/56	T134H	T355S	T412M
Лада 110	ВАЗ 2110	1.5	ВАЗ 2110	1500/54	T135H	T356S	T413M
	21101	1.6i 8кл	ВАЗ 21114	1600/60	T684H	T395S	T514M
	21102	1.5i 8кл	ВАЗ 2111	1500/57	T684H	T395S	T514M
	21103	1.5i 16кл	ВАЗ 2112	1500/66	T859H	T774S	T516M
Лада 111	ВАЗ 2111	1.5i 8кл	ВАЗ 2111	1500/57	T684H	T395S	T514M
	21111	1.5	ВАЗ 2110	1500/54	T135H	T356S	T413M
	21112	1.6i 8кл	ВАЗ 21114	1600/60	T684H	T395S	T514M
	21113	1.5i 16кл	ВАЗ 2112	1500/66	T859H	T774S	T516M
Лада 112	ВАЗ 2112	1.5i 16кл	ВАЗ 2112	1500/66	T859H	T774S	T516M
	21121	1.6i 8кл	ВАЗ 21114	1600/60	T684H	T395S	T514M
	21122	1.5i 8кл	ВАЗ 2111	1500/57	T684H	T395S	T514M
Лада 4x4 3Д		1.7i 8кл	ВАЗ 21214	1700/59	T771H	T867S	T517M
		1.8	ВАЗ 2130	1800/60	T419H	T418S	T420M
Лада 4x4 5Д		1.7i 8кл	ВАЗ 21214	1700/59	T771H	T867S	T517M
Лада 4x4 М		1.7i 8кл	ВАЗ 21214	1700/59	T771H	T867S	T517M
Ларгус Фургон	F90	1.6 8кл	K7M	1600/62	T910H	T930B	T528M
	F90	1.6i 8кл	ВАЗ 11189	1600/64	T684H	T395S	T514M
Ларгус Комби	R90	1.6 8кл	K7M	1600/62	T910H	T930B	T528M
	R90	1.6i 8кл	ВАЗ 11189	1600/64	T684H	T395S	T514M
Надежда *моновпр.*	ВАЗ 2120	1.7i 8кл	ВАЗ 21214	1700/59	-	T394S	T513M
распред. впрыск	2120	1.7i 8кл	ВАЗ 21214	1700/59	T771H	T867S	T517M

tripleline

TESLA

Тип и № комплектов проводов зажигания TESLA

Автомобиль	Модель	Объем	Двигатель	Объем cm³ и мощность kW	SILICONE basic	SILICONE premium	SILICONE inductive
ВАЗ - ЛАДА							
Надежда	2120	1.8	ВАЗ 2130	1800/60	T419H	T418S	T420M
Нива	ВАЗ 2121	1.6	ВАЗ 2121	1600/53	T340H	T359S	T416M
	ВАЗ 21213	1.7	ВАЗ 21213	1700/59	T419H	T418S	T420M
Нива *моновпрыск*	ВАЗ 21214	1.7i 8кл	ВАЗ 21214	1700/59	-	T394S	T513M
распред.впрыск	21214	1.7i 8кл	ВАЗ 21214	1700/59	T771H	T867S	T517M
	21214	1.8	ВАЗ 2130	1800/60	T419H	T418S	T420M
Нива 2 *моновпрыск*	ВАЗ 2123	1.7i 8кл	ВАЗ 21214	1700/59	-	T394S	T513M
распред.впрыск	2123	1.7i 8кл	ВАЗ 2123	1700/59	T771H	T867S	T517M
Нива *моновпрыск*	ВАЗ 2131	1.7i 8кл	ВАЗ 21214	1700/58	-	T394S	T513M
распред.впрыск	213122	1.7i 8кл	ВАЗ 21214	1700/60	T771H	T867S	T517M
	21312	1.8	ВАЗ 2130	1800/60	T419H	T418S	T420M
Нива Пикап	ВАЗ 2329	1.7i 8кл	ВАЗ 21214	1700/60	T771H	T867S	T517M
	2329	1.8	ВАЗ 2130	1800/60	T419H	T418S	T420M
Ока	ВАЗ 1111	0.65	ВАЗ 1111	650/22	T403H	T627S	T704M
	11113	0.75	ВАЗ 11113	750/25	T403H	T627S	T704M
Приора	ВАЗ 2170	1.6i 8кл	ВАЗ 21114	1600/60	T684H	T395S	T514M
	2170	1.6i 8кл	ВАЗ 21116	1600/66	T684H	T395S	T514M
	ВАЗ 2172	1.6i 8кл	ВАЗ 21114	1600/60	T684H	T395S	T514M
	2172	1.6i 8кл	ВАЗ 21116	1600/66	T684H	T395S	T514M
Самара	ВАЗ 2108	1.3	ВАЗ 2108	1300/49	T135H	T356S	T413M
	21081	1.1	ВАЗ 21081	1100/40	T135H	T356S	T413M
	21083	1.5	ВАЗ 21083	1500/51	T135H	T356S	T413M
	21083	1.5i 8кл	ВАЗ 2111	1500/57	T684H	T395S	T514M
Самара	ВАЗ 2109	1.3	ВАЗ 2108	1300/49	T135H	T356S	T413M
	21091	1.1	ВАЗ 21081	1100/40	T135H	T356S	T413M
	21093	1.5	ВАЗ 21083	1500/51	T135H	T356S	T413M
	21093	1.5i 8кл	ВАЗ 2111	1500/57	T684H	T395S	T514M
Самара	ВАЗ 21099	1.5	ВАЗ 21083	1500/51	T135H	T356S	T413M
	21099	1.5i 8кл	ВАЗ 2111	1500/57	T684H	T395S	T514M
	210993	1.3	ВАЗ 2108	1300/47	T135H	T356S	T413M
Самара 2	ВАЗ 2113	1.5i 8кл	ВАЗ 2111	1500/57	T684H	T395S	T514M
	2113	1.6i 8кл	ВАЗ 21114	1600/60	T684H	T395S	T514M
Самара 2	ВАЗ 2114	1.5i 8кл	ВАЗ 2111	1500/57	T684H	T395S	T514M
	2114	1.6i 8кл	ВАЗ 21114	1600/60	T684H	T395S	T514M
Самара 2	ВАЗ 2115	1.5i 8кл	ВАЗ 2111	1500/57	T684H	T395S	T514M
	2115	1.6i 8кл	ВАЗ 11183	1600/58	T684H	T395S	T514M
	2115	1.6i 8кл	ВАЗ 21114	1600/60	T684H	T395S	T514M
Chevrolet Niva	*моновпрыск*	1.7i 8кл	ВАЗ 21214	1700/59	-	T394S	T513M
	распред.впрыск	1.7i 8кл	ВАЗ 2123	1700/59	T771H	T867S	T517M
ГАЗ							
Волга	ГАЗ 24	2.4	ЗМЗ 24Д	2445/69,9	T342H	T358S	T415M
	2401	2.4	ЗМЗ 2401	2445/62,5	T342H	T358S	T415M
	2402	2.4	ЗМЗ 24Д	2445/69,9	T342H	T358S	T415M
	2410	2.4	ЗМЗ 402	2445/73,5	T342H	T358S	T415M
	2411	2.4	ЗМЗ 402	2445/73,5	T342H	T358S	T415M
	2412	2.4	ЗМЗ 402	2445/73,5	T342H	T358S	T415M
Волга	ГАЗ 3102	2.4	ЗМЗ 402	2445/73,5	T342H	T358S	T415M
	3102	2.4	ЗМЗ 4021	2445/66,2	T342H	T358S	T415M
	3102	2.3i 16кл	ЗМЗ 4062	2280/106,6	T696H	T712S	T713M
					T685H*	T682S*	T515M*
	310221	2.4	ЗМЗ 402	2445/73,5	T342H	T358S	T415M
	310221	2.3i 16кл	ЗМЗ 4062	2280/106,6	T696H	T712S	T713M
					T685H*	T682S*	T515M*
	31029	2.4	ЗМЗ 402	2445/73,5	T342H	T358S	T415M

*= без наконечников

Тип и № комплектов проводов зажигания TESLA

Автомобиль	Модель	Объем	Двигатель	Объем cm³ и мощность kW	SILICONE basic	SILICONE premium	SILICONE inductive
ГАЗ							
Волга	ГАЗ 3110	2.4	ЗМЗ 402	2445/73,5	T342H	T358S	T415M
	3110	2.4	ЗМЗ 4021	2445/66,2	T342H	T358S	T415M
	3110	2.3i 16кл	ЗМЗ 4062	2280/106,6	T696H	T712S	T713M
					T685H*	T682S*	T515M*
	3110	2.5i 16кл	ЗМЗ 4052	2500/112	T696H	T712S	T713M
					T685H*	T682S*	T515M*
Волга	ГАЗ 3111	2.3i 16кл	ЗМЗ 4062	2280/106,6	T696H	T712S	T713M
					T685H*	T682S*	T515M*
	3111	2.5i 16кл	ЗМЗ 4052	2460/111,8	T696H	T712S	T713M
					T685H*	T682S*	T515M*
Волга	ГАЗ 31105	2.4i 16кл	Chrysler DOHC	2429/105	T891H	T106S	T679M
Volga Siber		2.4i 16кл	Chrysler DOHC	2429/105	T891H	T106S	T679M
Соболь	ГАЗ 2217, 2752, 2310	2.3i 16кл	ЗМЗ 4062	2280/81	T696H	T712S	T713M
					T685H*	T682S*	T515M*
	ГАЗ 2217, 2752, 2310	2.4	ЗМЗ 4026	2445/74	T342H	T358S	T415M
	ГАЗ 2217, 2752, 2310	2.5i 16кл	ЗМЗ 40522	2460/90	T696H	T712S	T713M
					T685H*	T682S*	T515M*
Соболь Бизнес	ГАЗ 2217, 2752, 2310	2.9 Евро3	УМЗ 4216	2890/79	T676H	T677S	T678M
		(до 08.2009)					
Соболь Бизнес	ГАЗ 2217, 2752, 2310	2.9 Евро3	УМЗ 4216	2890/90	T354H	T417S	T347M
		(с 08.2009)					
Соболь Бизнес	ГАЗ 2217, 2752, 2310	2.9 Евро4	УМЗ 42164	2890/90	T341H	T343S	T345M
Газель	ГАЗ 2705, 3221, 3302	2.4	ЗМЗ 4026	2445/74	T342H	T358S	T415M
	ГАЗ 2705, 3221, 3302	2.3i 16кл	ЗМЗ 4062	2280/81	T696H	T712S	T713M
					T685H*	T682S*	T515M*
	ГАЗ 2705, 3221, 3302	2.5i 16кл	ЗМЗ 40522	2460/90	T696H	T712S	T713M
					T685H*	T682S*	T515M*
	ГАЗ 2705, 3221, 3302	2.9	УМЗ 4215	2890/70	T342H	T358S	T415M
Газель	ГАЗ 33023	2.3i 16кл	ЗМЗ 4062	2280/81	T696H	T712S	T713M
					T685H*	T682S*	T515M*
	ГАЗ 33023	2.5i 16кл	ЗМЗ 40522	2460/90	T696H	T712S	T713M
					T685H*	T682S*	T515M*
Газель Бизнес	ГАЗ 2705, 3221, 3302	2.9 Евро3	УМЗ 4216	2890/79	T676H	T677S	T678M
		(до 08.2009)					
Газель Бизнес	ГАЗ 2705, 3221, 3302	2.9 Евро3	УМЗ 4216	2890/90	T354H	T417S	T347M
		(с 08.2009)					
Газель Бизнес	ГАЗ 2705, 3221, 3302	2.9 Евро4	УМЗ 42164	2890/78	T341H	T343S	T345M
Газель Некст	A21	2.7 Евро4	A2755	2690/78	T341H	T343S	T345M
	A21	2.9 Евро4	УМЗ 4216	2890/78	T341H	T343S	T345M
Газ 51, 52, 53, 66	ГАЗ 51	3.5	ГАЗ 52-01	3480/55	T692H	T693S	T691M
	52	3.5	ГАЗ 52-01	3480/55	T692H	T693S	T691M
	53	4.3	ЗМЗ 511	4250/92	T680H	T681S	T754M
	66	4.3	ЗМЗ 513	4250/92	T680H	T681S	T754M
Газ 3307, 3308	ГАЗ 3307	4.3	ЗМЗ 511	4250/92	T680H	T681S	T754M
	3308	4.7	ЗМЗ 5239	4670/96	T680H	T681S	T754M
	3309	4.7	ЗМЗ 5239	4670/96	T680H	T681S	T754M
ЗАЗ							
Таврия	ЗАЗ 1102	1.1	МеМЗ 245	1091/38	T137H	T367S	T860M
	110216	1.1	МеМЗ 2451	1091/35	T137H	T367S	T860M
	110217	1.2	МеМЗ 2457	1197/43	T137H	T367S	T860M
	110217	1.2i	МеМЗ 2477	1197/46	T684H	T395S	T514M
Славута	ЗАЗ 1103	1.1	МеМЗ 245	1091/38	T137H	T367S	T860M
	1103	1.2	МеМЗ 2457	1200/42	T137H	T367S	T860M
	1103	1.2i	МеМЗ 2477	1197/46	T684H	T395S	T514M

*= без наконечников

Тип и № комплектов проводов зажигания TESLA

Автомобиль	Модель	Объем	Двигатель	Объем cm³ и мощность kW	SILICONE basic	SILICONE premium	SILICONE inductive
ЗАЗ							
Славута	1103	1.3	MeM3 301	1299/46	T137H	T367S	T860M
	1103	1.3i	MeM3 307	1299/49	T684H	T395S	T514M
Дана	ЗАЗ 1105	1.1	MeM3 245	1091/38	T137H	T367S	T860M
	1105-40	1.2	MeM3 246	1197/43	T137H	T367S	T860M
Вида		1.4i 16V	F14D3	1399/62	-	T923B	-
		1.5i 8V	F15S3	1498/62	-	T738B	-
		1.5i 16V	SQR477F	1497/80	-	T360B	-
Ланос		1.3i	A13SMS	1349/55	-	T738B	-
		1.4i 16V	F14D4	1399/74	-	T711B	-
		1.5i	A15SMS	1498/63	-	T738B	-
		1.6i 16V	A16DMS	1598/77	-	T711B	-
Сенс		1.3i	MeM3 307	1300/52	-	T393B	-
		1.4i	MeM3 317	1386/56	-	T393B	-
Шанс		1.3i	MeM3 307	1299/49	-	T393B	-
		1.5i	A15SMS	1498/63	-	T738B	-
Форза		1.5i 16V	SQR477F	1497/80	-	T360B	-
ЗИЛ							
Зил 130	ЗИЛ 130	6.0	ЗИЛ 130	5969/110	T683H	T687S	T755M
	131	6.0	ЗИЛ 130	5969/110	T683H	T687S	T755M
	133	6.0	ЗИЛ 130	5969/110	T683H	T687S	T755M
ИЖ							
Москвич	ИЖ 412	1.5	УЗАМ 412	1478/55	T634H	T635S	-
	ИЖ 412-028	1.5	УЗАМ 331.10	1479/53	T634H	T635S	-
Комби	ИЖ 1500	1.5	УЗАМ 412	1478/55	T634H	T635S	-
2125	ИЖ 2125	1.5	УЗАМ 412	1478/55	T634H	T635S	-
	ИЖ 21251	1.5	УЗАМ 331.10	1479/53	T634H	T635S	-
Ода	ИЖ 2126	1.5	УЗАМ 331.10	1479/53	T634H	T635S	-
	2126	1.6	ВАЗ 2106	1568/54,5	T134H	T355S	T412M
	2126	1.7	УЗАМ 331	1699/58	T136H	T357S	T414M
Фабула	ИЖ 21261	1.6	ВАЗ 2106	1568/54,5	T134H	T355S	T412M
	21261	1.7	УЗАМ 3317.10	1700/58	T634H	T635S	-
2715	ИЖ 2715	1.5	УЗАМ 412	1478/55	T634H	T635S	-
	27151	1.5	УЗАМ 331.10	1479/53	T634H	T635S	-
2717	ИЖ 2717	1.6	ВАЗ 2106	1568/54,5	T134H	T355S	T412M
	2717	1.7	УЗАМ 3317.10	1700/58	T634H	T635S	-
ЛуАЗ							
	ЛуАЗ 1301	1.1	MeM3 245	1091/38	T137H	T367S	-
	1302	1.1	MeM3 245	1091/38	T137H	T367S	-
ПАЗ							
Паз 3205, 3206	ПАЗ 3205	4.7	ЗМЗ 5239	4670/96	T680H	T681S	T754M
	3206	4.7	ЗМЗ 5239	4670/96	T680H	T681S	T754M
	672	4.7	ЗМЗ 5239	4670/96	T680H	T681S	T754M
РАФ							
Латвия	РАФ 2203	2.4	ЗМЗ 402	2445/73,5	T342H	T358S	T415M
	2907	2.4	ЗМЗ 402	2445/73,5	T342H	T358S	T415M
ТАГАЗ							
HYUNDAI Accent		1.5 16V DOHC	G4ER	1495/73	-	T523B	-
Accent		1.5 SOHC	G4EB	1495/66	-	T747B	-
Sonata		2.0 16V DOHC	G4GC	1997/100	-	T868B	-
Sonata		2.7 24V DOHC	G6BA	2656/127	-	T117B	-
Santa Fe Classic		2.7 24V DOHC	G6BA	2656/127	-	T117B	-
Elantra XD		1.6 16V	G4ED	1599/77	-	T118B	-
VORTEX Corda		1.5	SQR477F	1497/81	-	T360B	-
Estina		1.6	SQR481F	1597/87	-	T314B	-

Тип и № комплектов проводов зажигания TESLA

Автомобиль	Модель	Объем	Двигатель	Объем cm³ и мощность kW	SILICONE basic	SILICONE premium	SILICONE inductive
ТАГАЗ							
VORTEX Estina FL-C		1.5i 16V	SQR477F	1497/80	-	T360B	-
Estina FL-C		2.0 DOHC	SQR484F	1971/95	-	T314B	-
Tingo		1.8i 16V	SQR481FC	1845/97	-	T314B[1)]	-
Tingo		1.8i 16V	SQR481FC	1845/97	-	T360B[2)]	-
Tingo FL		1.8i 16V	SQR481FC	1845/97	-	T314B[1)]	-
Tingo FL		1.8i 16V	SQR481FC	1845/97	-	T360B[2)]	-
TAGAZ Tagger		2.3 4x4	M161 (E23)	2 295/110	-	T743C	-
Tagger		3.2 4x4	M162 (E32)	3 199/162	-	T623C	-
Road Partner		2.3 4x4	M161 (E23)	2 295/110	-	T743C	-
Road Partner		3.2 4x4	M162 (E32)	3 199/162	-	T623C	-
УАЗ							
	УАЗ 452	2.5	УМЗ 451	2445/55	T342H	T358S	T415M
	УАЗ 469	2.5	УМЗ 451	2445/55	T342H	T358S	T415M
	УАЗ 2206	2.5	УМЗ 4178	2445/67	T342H	T358S	T415M
	2206	2.7i 16кл	ЗМЗ 4091	2693/104	T733H	T804S	T904M
	2206	2.9	УМЗ 4218	2890/79	T342H	T358S	T415M
	УАЗ 31512	2.5	УМЗ 4178	2445/67	T342H	T358S	T415M
	31512	2.7i 16кл	ЗМЗ 4091	2693/104	T733H	T804S	T904M
	31512	2.9	УМЗ 4218	2890/79	T342H	T358S	T415M
	УАЗ 31514	2.7i 16кл	ЗМЗ 4091	2693/104	T733H	T804S	T904M
	31514	2.9	УМЗ 4218	2890/79	T342H	T358S	T415M
	УАЗ 3152	2.5	УМЗ 4178	2445/67	T342H	T358S	T415M
	УАЗ 3153	2.9	УМЗ 4218	2890/79	T342H	T358S	T415M
	УАЗ 3159	2.7i 16кл	ЗМЗ 4091	2693/104	T733H	T804S	T904M
Симбир	УАЗ 3160	2.7i 16кл	ЗМЗ 4091	2693/104	T733H	T804S	T904M
	3160	2.9i	УМЗ 4213	2890/77	T676H	T677S	T678M
Симбир	УАЗ 3162	2.7i 16кл	ЗМЗ 4091	2693/104	T733H	T804S	T904M
	3162	2.9i	УМЗ 4213	2890/77	T676H	T677S	T678M
	УАЗ 3303	2.5	УМЗ 4178	2445/67	T342H	T358S	T415M
	3303	2.7i 16кл	ЗМЗ 4091	2693/104	T733H	T804S	T904M
	3303	2.9	УМЗ 4218	2890/79	T342H	T358S	T415M
	УАЗ 3741	2.5	УМЗ 4178	2445/67	T342H	T358S	T415M
	3741	2.7i 16кл	ЗМЗ 4091	2693/104	T733H	T804S	T904M
	3741	2.9	УМЗ 4218	2890/79	T342H	T358S	T415M
	УАЗ 3909	2.5	УМЗ 4178	2445/67	T342H	T358S	T415M
	3909	2.9	УМЗ 4218	2890/79	T342H	T358S	T415M
Фармер	УАЗ 3909	2.7i 16кл	ЗМЗ 4091	2693/104	T733H	T804S	T904M
	3909	2.9i	УМЗ 4213	2890/77	T676H	T677S	T678M
	УАЗ 3962	2.5	УМЗ 4178	2445/67	T342H	T358S	T415M
	3962	2.7i 16кл	ЗМЗ 4091	2693/104	T733H	T804S	T904M
	3962	2.9	УМЗ 4218	2890/79	T342H	T358S	T415M
Hunter	УАЗ 315195	2.7i 16кл	ЗМЗ 4091	2693/104	T733H	T804S	T904M
	315195	2.9i	УМЗ 4213	2890/77	T676H	T677S	T678M
Patriot	УАЗ 3163	2.7i 16кл	ЗМЗ 4091	2693/104	T733H	T804S	T904M
Pick-Up		2.7i 16кл	ЗМЗ 4091	2693/104	T733H	T804S	T904M

[1)] длина свечного наконечника 125 мм, [2)]длина свечного наконечника 150 мм

Sales representatives
Торговые представители
Obchodní zástupci

ČESKÁ REPUBLIKA

ELIT CZ
Jeremiášova 1283/18
155 00 Praha 5 – Stodůlky
Phone: +420 271 022 222
E-mail: elit@elit.cz
www.elit.cz

APM Automotive
Nádražní 104
345 06 Kdyně
Phone: +420 379 302 922
E-mail: info@apm.cz
www.apm.cz

AMD - Zdeněk Netolický
Náměstí Míru 89
568 02 Svitavy
Phone: +420 461 532 256
E-mail: amd@svi.cz

AUTOPARTS
Ve Žlíbku 1800
190 00 Praha 9 – Horní Počernice
Phone: +420 226 001 333-4
E-mail: autoparts@autoparts.cz

CAR CENTRUM
Kosořice 22
294 41 Dobrovice
Phone: +420 326 374 014
E-mail: carcentrum-mb@carcentrum-mb.cz

PRONDO
Víta Nejedlého 742
293 06 Kosmonosy
Phone: +420 326 728 002
E-mail: prondo@prondo.cz

VAPOL CZ
Zašová 270
756 51 Zašová
Phone: +420 571 113 113
E-mail: odbyt@vapol.cz

H.P.P.
Rychnovek 77
552 25 Rychnovek
Phone: +420 491 475 022
E-mail: info@hpp.cz

SLOVENSKO

ELIT Slovakia
Kolmá 4
851 01 Bratislava
Phone: +421 268 209 222
E-mail: elit@elit.sk
www.elit.sk

AUTOTECHNA BARÁNEK
Stráž 3
960 01 Zvolen
Phone / Fax: +421 45 532 16 36
E-mail: info@autotechna.sk
www.autotechna.sk

Autosúčiastky Import-Export s.r.o.
Timravy 31
036 01 Martin
Phone / Fax: +421 43 4007000
E-mail: odbyt@autosuciastky.sk

CAR TEAM
Hviezdoslavova 22
942 01 Šurany
Phone / Fax: +421 35 6500 421
E-mail: carteam@carteam.sk

G+K Autosúčiastky
Bánovská cesta 2
010 04 Žilina
Phone: +421 41 763 18 27
E-mail: gak@gak.sk

TWIN Autosúčiastky
Novozamocká 47
942 01 Šurany
Phone: +421 35 691 19 00
E-mail: twincar@twincar.sk

ALBANIA

Bushi Servis SH.A
Rr. Asim Vokshi Nd.45 H.2
1016 Tirana
Phone: +355 44808504
+355 42234115
E-mail: leo.munguli@bushi-al.com

AZERBAIDZHAN

Gunduz Aliyev
Autorinok
Sumgait
Phone: +994503207263
+994504313322

BELARUS

MOTEXAVTOSAPTSCHASTI LTD.
87G Geologicheskaja str., build. 11
220138 Minsk
Phone: +375 17 362 02 02
E-mail: motexautoparts@tut.by
www.motex.by/en

"Dias-Auto"Ltd
Grushevskaya str.91 off.5H/1
220089 Minsk
Phone: +375 172 20 40 25
E-mail: sales@diasauto.by
www.diasauto.by

BOLIVIA

Maye-Ni Comercio
Jose Delgadillo Salazar
Condominio Corcega # 15
Calle Domingo Bueno
Santa Cruz de la Sierra
Phone: +591-3-3214641
E-mail: jose.delgadillo@mayeni.info

BOSNIA AND HERZEGOVINA

Berlijeta d.o.o. Visoko
Arnautovicko Polje bb
71300 Visoko
Phone: +387 32 731 580
www.berlijeta.com

BULGARIA

KOSSER JSC
bul. Tsar Osvoboditel 124
9000 Varna City
Phone: +359 052 758 040
Fax: +359 052 503 655
E-mail: office@kosser.net
www.kosser.net

COLOMBIA

CHECOREPUESTOS LTDA
Calle 67A
9-62, ofc. 202 Bogota
Phone: +57 3145010
Fax: +57 345 20 75
E-mail: infocheco@checorepuestos.com
www.checorepuestos.com

CROATIA

BATERIJA- TAB Hrvatska d.o.o.
Čulinečka cesta 269
10000 Zagreb
Phone: + 385 1 233 9 233
Fax: + 385 1 233 0 737
E-mail: ured@baterija.hr

ECUADOR

CHECOPARTS CIA.LTDA
Av.Ramon Roca 830Y Av.9DE Octubre
Quito
Phone: +593 9 99 12 12 61
E-mail: checoparts@hotmail.com

EGYPT

SFV
21 Alamaza St. Heliopolis
Cairo
Phone: +202 2418-6290
E-mail: sales@sfv-egypt.com
www.sfv-egypt.com

ESTONIA

TEEME VARU OSAD OU
Kadaka Tee 1/2
12916 Tallinn
Phone / Fax: +372 6559988
E-mail: info@teeme.ee
www.teeme.ee

FRANCE

CENTRALE PIECES 21
3 Rue Champs aux Fèves
21121 Fontaine Les Dijon
Phone: +33 06 67 47 96 23
Email: contact@21cpi.com
www.21cpi.com

GERMANY

HIRSCH KFZ-TEILE IMPORT + GROSSHANDELS GmbH
Talstraße 3
57577 Hamm/Sieg
Phone: +49 (0)2682 95590
E-mail: info@hirsch-autoteile.de
www.hirsch-autoteile.de

HIRSCH Autoteile GmbH
Philipp-Reis-Str. 14
36199 Rotenburg
Phone: +49 (0)6623 91510
E-mail: info@hirsch-autoteile.de
www.hirsch-autoteile.de

ALADIN-POWER e.K.
Justus-von-Liebig-Str. 4
D-31535 Neustadt
Phone: +49 0176 82122942
E-mail: info@aladin-power.com
www.aladin-power.com

GREECE

TROHOS PAPATHEODOROU S.A
Dimokratias 86
26500 Ovrya Patras
Phone: +30 2610 426333
Fax: +30 2610 423285
E-mail: info@trohos.gr
www.trohos.gr

HUNGARY

Bardi Auto ZRt.
Orczy ut 44-46
1089 Budapest
Phone: +361 3030930
E-mail: import2@bardiauto.hu
www.bardiauto.hu

Gepard-FEN Kft.
Szent László u. 108.
1135 Budapest
Phone / Fax: +361 3402550
E-mail: auto@gepardfen.hu
www.gepardfen.hu

IGNITION HUNGARY Kft.
Bikszádi u. 3/b
1119 Budapest
Phone: +36 30 752 8217
Email: info@ignition.hu
www.ignition.hu

IRELAND

MicksGarage.com
Unit 50 Park West Road
Park West Industrial Park
Dublin 12
Phone: +353 0 1 4406603
E-mail: info@micksgarage.com
www.micksgarage.com

ITALY

Remarc srl
Contrada Salice, 11
80021 - Afragola (NA)
Phone: +39 081 8510863
Fax: +39 081 8696096
E-mail: info@remarc.it
www.remarc.it

KAZAKHSTAN

RICAMBI
050031, Almaty, Tole bi 305
Phone: +7 727 352-73-53
E-mail: v.shevkunov@ricambi.kz
www.ricambi.kz

LATVIA

ANLAT, SIA
Brivibas gatve, 234
Riga, LV-1039
Phone / Fax: +371 67513691
E-mail: info@anlat.lv
www.anlat.lv

SIA REPSALE
Acones str. 18
Stopinu nov., Riga distr.
LV-2130 Ulbroka
Phone: +371 67311160
Fax: +371 67311181
Email: info@repsale.lv
www.repsale.lv

LITHUANIA

UAB „EOLTAS“
Žemaičių pl. 65A,
LT-48101 Kaunas
Phone: +370 374 655 87
E-mail: info@eoltas.lt
www.eoltas.lt

UAB „DETALITA“
Kauno r. sav. Naugardiškės k.
LT-53271 Garliavos pl.53
Phone: +370 620 98718
E-mail: info@detalita.lt

MDR Verslas,UAB
Rygos 17a
Vilnius, LT-05205
Phone: +370 52032309
Fax: +370 52032310
E-mail: rolandas@mdr-verslas.com

MACEDONIA

NOVOSELSKI
st. Goce Delcev 43
2400 Strumica
Phone: +389 34 345 981
E-mail: info@ab-novoselski.com
www.ab-novoselski.com

Donco-Brisk
Ivan Kozarov 31/52
Skopje 1000
Phone: + 389 75 426 751

MOLDAVIA

SRL TORSIONIX-AUTO
str.M.Basarab 5/3, a.19
MD-2045 Chisinau
Phone / Fax: + 373 22 42 26 01
E-mail: torsionix@rambler.ru

MONTENEGRO

Kompanija Djukic d.o.o
Bulevar Pete Proleterske 2A/4
Stari Aerodrom 81000 Podgorica
Phone / Fax: +382 020 656 276
E-mail: Radovan.dj@t-com.me

NORWAY

Norsk Bildelsenter AS
Postboks 43
N-3421 Lierskogen
Phone: +47 32 85 40 40
Fax: +47 32 85 44 94
E-mail: post@norskbildelsenter.no
www.norskbildelsenter.no

POLAND

ELIT PL sp. Z o.o.
Al. W. Rożdzieńskiego 188
Katowice 40-203
Phone: +48 32 775 99 60
Fax: +48 32 3183187
E-mail: elit@elitpl.pl
www.elitpl.pl

BHMD
Arkuszowa 10 St.
01-934 Warsaw
Phone: +48(22) 864 04 64
Fax: +48(22) 864 04 68
E-mail: info@bhmd.pl
www.bhmd.pl

EXPERT auto
ul. Fabryczna 7
41-404 Mysłowice
Phone: +48 32 2252317
Fax: +48 32 3183187
E-mail: biuro@expert.auto.pl
www.expert.auto.pl

F.H.U. MAREKS S.J.
Czestochowska 177
32-085 Modlnica
Phone: +48 12 419 28 02
E-mail: biuro@mareks.auto.pl
www.mareks.auto.pl

P.H. DEKO
ul. Wilcza 27
50-429 Wroclaw
Phone / Fax: +48 71 302 52 13
E-mail: wroclaw@dekoautoparts.pl
www.dekoautoparts.pl

PORTUGAL

AUTO RECTO, LDA
Rua de S. Victor 199
4000-516 Porto
Phone: +351 225 101 771
E-mail: geral@autorecto.com
www.autorecto.com

ROMANIA

SC AUTONET IMPORT SRL
440122 Satu Mare
str. Aurel Vlaicu, nr.78
Phone: +40 261 710587
Fax: +40 261 806839
E-mail: office@autonet.ro
www.autonet.ro

ELIT ROMANIA
Italia Street, No.1-7
Europolis Park Bucharest
077040 Chiajna
Phone: +40 21 318 05 81
E-mail: elit@elit.ro
www.elit.ro

SC MANICEX TRADING SRL
VATRA LUMINOASA street Nr 70,
Bl.W1, Ap.2, Sector 2
021184 Bucharest
Phone / Fax: +40 21 242 08 91
E-mail: manicex.trading.2017.04@gmail.com

RUSSIA

CZ-parts Center
Dorozhnaya 3/11
117 545 Moscow
Phone / Fax: +7 495 229 22 25
E-mail: tesla-blatna@mail.ru
www.tesla-rus.ru

AM-RUS Company l.t.d
Varshavskoe sh. 125
117 587 Moscow
Phone: +7 495 2130811
E-mail: info@am-rus.ru
www.am-rus.ru

SERBIA

DS ALFA TRADE
Cvetanova ćuprija 117 G
Veliki Mokri Lug
11126 Beograd
Phone / Fax: +381 11 346 0695
E-mail: b.sojic@sbb.rs
www.autokablovi.rs

Delmax d.o.o.
Volarsko polje b.b.
22300 Stara Pazova
Phone: +381 22 367 000
Fax: +381 22 316 501
e-mail: info@delmax.rs
www.delmax.rs

SLOVENIA

COPEX d.o.o.
Ulica Jožeta Jame 12
1210 Ljubljana-Šentvid
Phone: +386 1 5000850
Fax: +386 1 5000858
E-mail: info@copex.si
www.copex.si

SWITZERLAND

Augros-Lumecor AG
Station Oberkempttal
Spinnereiweg 4
8307 Effretikon
Phone: +41(0)44 931 30 50
Fax: +41(0)44 931 30 55
E-mail: info@a-l.ch
www.a-l.ch

TURKEY

MATRIX OTO YEDEK PARCA İTH. VE İHR. LTD. ŞTİ.
Yigitler Mah. Buyuk Oto
Ticaret Merkezi F.103
Sok. No: 7/1 Yildirim
16290 Bursa
Phone: +90 542 345 49 45
E-mail: info@matrixotomotiv.com
www.matrixotomotiv.com

UKRAINE

ELIT Ukraine
135, Pyrogivskyi shliakh
Kiev, 03026
Phone: +38 (044) 501 35 00
Fax: +38 (044) 503 93 73
E-mail: elit@elit.ua
www.elit.ua

“Lite F” ltd.
Pyrogivskyi shliakh 34
03680, Kyiv
Phone: +38 044 221 46 25
E-mail: office@lightf.com.ua

Ignition coils
Катушки зажигания
Zapalovací cívky

Automotive lamps
Автомобильные лампы
Automobilové žárovky

Automotive fuses
Автомобильные предохранители
Automobilové pojistky

Coil on plug boots
Наконечники для индивидуальных катушек зажигания
Koncovky pro přímé zapalovací cívky

TESLA at TecDoc
TESLA в каталоге TecDoc
TESLA v databázi TecDoc

TecAlliance
Certified Data Supplier

Contacts:
TESLA BLATNÁ, a.s.
Palackého 644
388 15 Blatná
Czech Republic

E-mail: sales@tesla-blatna.cz
www.tesla-blatna.cz

Phone: +420 383 415 354
Telefax: +420 383 415 300

Контактный адресс:
TESLA BLATNÁ, a.s.
Palackého 644
388 15 Blatná
Czech Republic

E-mail: sales@tesla-blatna.cz
www.tesla-blatna.cz

Тел: +420 383 415 354
Факс: +420 383 415 300

Kontakt:
TESLA BLATNÁ, a.s.
Palackého 644
388 15 Blatná
Česká republika

E-mail: prodej@tesla-blatna.cz
www.tesla-blatna.cz

Telefon: +420 383 415 337
Telefax: +420 383 415 215

The producer reserves the right of change in case of technical improvement of products.
Производитель оставляет за собой право на изменение указаных изделий в рамках технических улучшений.
Výrobce si vyhrazuje právo změn v rámci technických zlepšení výrobků.

1st edition: 11 - 2017
1. издание: 11 - 2017
1. vydání katalogu: 11 – 2017

QUALITY SYSTEM CERTIFICATION
DNV·GL
ISO 9001

Art. 49010098

2018 - 2020

ZAPALOVACÍ KABELY

IGNITION LEADS

ПРОВОДА ЗАЖИГАНИЯ

ZÜNDLEITUNGEN

CABLES DE ENCENDIDO

CÂBLES D'ALLUMAGE

CAVI D'ACCENSIONE

www.tesla-blatna.cz

TecAlliance
TecDoc Inside

2018 - 2020

ZAPALOVACÍ KABELY

IGNITION LEADS

ПРОВОДА ЗАЖИГАНИЯ

ZÜNDLEITUNGEN

CABLES DE ENCENDIDO

CÂBLES D'ALLUMAGE

CAVI D'ACCENSIONE

www.tesla-blatna.cz

TESLA | trusted by generations

TESLA BLATNÁ, a.s., Palackého 644, 388 15 Blatná, Czech Republic
e-mail: sales@tesla-blatna.cz, phone: +420 383 415 354, telefax: +420 383 415 300
www.tesla-blatna.cz